SONY

VIDEOCASSETTE PLAYER

# BVW-60P

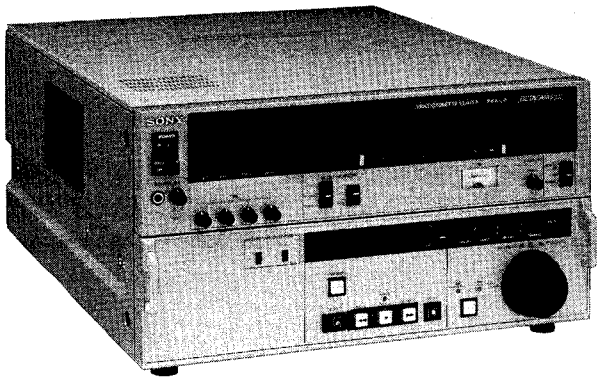

BETACAM SP™

## MAINTENANCE MANUAL

Volume 2 1st Edition (Revised 9)

Serial No. 10001 and Higher

EBU N-10 LEVEL

このマニュアルに記載されている事柄の著作権は当社にあり，説明内容は機器購入者の使用を目的としています。
従って，当社の許可なしに無断で複写したり，説明内容(操作，保守等）と異なる目的で本マニュアルを使用することを禁止します。

The material contained in this manual consists of information that is the property of Sony Corporation and is intended solely for use by the purchasers of the equipment described in this manual.
Sony Corporation expressly prohibits the duplication of any portion of this manual or the use thereof for any purpose other than the operation or maintenance of the equipment described in this manual without the express written permission of Sony Corporation.

Le matériel contenu dans ce manuel consiste en informations qui sont la propriété de Sony Corporation et sont destinées exclusivement à l'usage des acquéreurs de l'équipement décrit dans ce manuel.
Sony Corporation interdit formellement la copie de quelque partie que ce soit de ce manuel ou son emploi pour tout autre but que des opérations ou entretiens de l'équipement à moins d'une permission écrite de Sony Corporation.

Das in dieser Anleitung enthaltene Material besteht aus Informationen, die Eigentum der Sony Corporation sind, und ausschließlich zum Gebrauch durch den Käufer der in dieser Anleitung beschriebenen Ausrüstung bestimmt sind.
Die Sony Corporation untersagt ausdrücklich die Vervielfältigung jeglicher Teile dieser Anleitung oder den Gebrauch derselben für irgendeinen anderen Zweck als die Bedienung oder Wartung der in dieser Anleitung beschriebenen Ausrüstung ohne ausdrückliche schriftliche Erlaubnis der Sony Corporation.

# TABLE OF CONTENTS

Volume 1


1. INSTALLATION
2. TECHNICAL INFORMATION
3. PERIODIC CHECK AND MAINTENANCE
4. SERVICE INFORMATION
5. REPLACEMENT OF MAJOR PARTS
6. LINK AND DRIVE SYSTEM ALIGNMENT
7. TORQUE ALIGNMENT
8. TAPE RUN ALIGNMENT
9. POWER AND CONTROL SYSTEM ALIGNMENT
10. SERVO SYSTEM ALIGNMENT
11. AUDIO/TIME CODE ALIGNMENT
12. VIDEO SYSTEM ALIGNMENT
13. TBC ALIGNMENT
14. OVERALL VIDEO ALIGNMENT


Volume 2

15. BLOCK DIAGRAM


Overall . . . . . 15-5
Y/C Demodulator . . . . . 15-9
A/D Converter . . . . . 15-13
Write Clock Generator
Main Memory . . . . . 15-17
D/A Converter
Y Digital Noise Reduction
Edge Detector
REF Signal/Timing Generator . . . . . 15-21
Encoder . . . . . 15-25
Video Output . . . . . 15-28
AGC for AFM
LNG Audio . . . . . 15-31
AFM Audio . . . . . 15-35
Audio Meter . . . . . 15-39
Microcomputer Servo System . . . . . 15-42
Reel Servo . . . . . 15-45
Drum/Capstan Servo . . . . . 15-48
System Control . . . . . 15-51
I/O Expander . . . . . 15-55
Time Code Reader
Time Base Impact Error Corrector
LTC PB Amplifier . . . . . 15-59

## 16. SCHEMATIC DIAGRAM


Circuit Configuration . . . . . 16-1

**VIDEO/TBC**

DM-56P(1/2) . . . . . 16-7
DM-56P(2/2) . . . . . 16-15
DUS-259
DUS-269
DUS-288
EQ-26
EQ-28
TBC-7P(1/3) . . . . . 16-22(a)
TBC-7P(1/3) . . . . . 16-22(b)
TBC-7D(1/3) . . . . . 16-22(c)
TBC-7P(2/3) . . . . . 16-29(a)
TBC-7P(2/3) . . . . . 16-29(b)
TBC-7D(2/3) . . . . . 16-29(c)
TBC-7P(3/3) . . . . . 16-36(a)
SW-261
TBC-7P(3/3) . . . . . 16-36(b)
TBC-7D(3/3) . . . . . 16-36(c)
TBC-8P(1/3) . . . . . 16-43(a)
TBC-8P(1/3) . . . . . 16-43(b)
TBC-12P(1/3) . . . . . 16-43(c)
TBC-8P(2/3) . . . . . 16-50(a)
TBC-8P(2/3) . . . . . 16-50(b)
TBC-12P(2/3) . . . . . 16-50(c)
TBC-8P(3/3) . . . . . 16-57(a)
NR-25
TBC-8P(3/3) . . . . . 16-57(b)
NR-25
TBC-12P(3/3) . . . . . 16-57(c)
NR-32 . . . . . 16-60(c)-2
TBC-9P(1/2) . . . . . 16-65
TBC-9P(2/2) . . . . . 16-73
EN-48P(1/3) . . . . . 16-81
EN-48P(2/3) . . . . . 16-89
EN-48P(3/3) . . . . . 16-97
VO-18AP(1/3) . . . . . 16-105
VO-18AP(2/3) . . . . . 16-113
VO-18AP(3/3)
DUS-270
DEC-39A . . . . . 16-120
CP-101AP . . . . . 16-126
CP-103AP

**AUDIO**

AU-118P . . . . . 16-133
AFM-1A . . . . . 16-141
FL-61
BF-28A(1/2) . . . . . 16-148
VR-42
BF-28A(2/2) . . . . . 16-154
CP-111(1/4) . . . . . 16-161
CP-113
CP-111(2/4) . . . . . 16-169
CP-113
CP-111(3/4) . . . . . 16-177
CP-113
CP-111(4/4) . . . . . 16-185
HP-33
VR-62
SW-144A . . . . . 16-193
VR-61
DP-72
DP-74
DP-73

**SERVO**

SV-82A(1/2) . . . . . 16-200
SV-82A(2/2) . . . . . 16-206
SV-83B(1/2) . . . . . 16-212
SV-83B(2/2) . . . . . 16-218
SV-84P(1/2) . . . . . 16-224
SV-84P(2/2) . . . . . 16-230
RE-28 . . . . . 16-237
PTC-20
PTC-21
PTC-36
DR-56
RE-36 . . . . . 16-245
RM-40
DE-15
SE-57
PTC-31

**SYSTEM CONTROL**

SY-61A(1/3) . . . . . 16-253
SY-61A(2/3) . . . . . 16-261
SY-61A(3/3)
SY-64AP(1/5) . . . . . 16-269

SY-64AP(2/5) . . . . . 16-276
SY-64AP(3/5) . . . . . 16-282
SY-64AP(4/5)
SY-64AP(5/5) . . . . . 16-289
PD-35
PTC-15
RM-57 . . . . . 16-296
CL-14
CL-24
CCM-2
PC-32
PC-33
PC-41
PC-47
HC-11 . . . . . 16-302

**CONTROL PANEL**

KY-96C
KY-107A
DP-71A
PTC-32
PT-9 . . . . . 16-309

**TIME CODE**

TC-40AP . . . . . 16-317

**POWER SUPPLY**

AC-81/96
M1
M2
C1
C2 . . . . . 16-325

**FRAME**

MB-191C(1/4) . . . . . 16-333
MB-191C(2/4) . . . . . 16-340
MB-191C(3/4) . . . . . 16-346
MB-191C(4/4) . . . . . 16-352
MB-192 . . . . . 16-358
FRAME(1/5) . . . . . 16-364
FRAME(2/5) . . . . . 16-367
FRAME(3/5) . . . . . 16-370
FRAME(4/5) . . . . . 16-373
FRAME(5/5) . . . . . 16-376

## 17. PRINTED WIRING BOARDS

Circuit Configuration . . . . . 17-1

**VIDEO/TBC**

DM-56P
DUS-259
DUS-269 . . . . . 17-3
DUS-288
EQ-26
EQ-28 . . . . . 17-3(a)
TBC-7P
SW-261 . . . . . 17-11(a)
TBC-7P . . . . . 17-11(b)
TBC-7D . . . . . 17-11(c)
TBC-8P . . . . . 17-19(a)
TBC-8P . . . . . 17-19(b)
TBC-12P. . . . . 17-19(c)
TBC-9P
NR-25 . . . . . 17-27(a)
TBC-9P
NR-32 . . . . . 17-27(b)
EN-48P . . . . . 17-35
VO-18P/18AP . . . . . 17-41 (a)
VO-18AP
DUS-270 . . . . . 17-41 (b)
DEC-39A . . . . . 17-47
CP-103AP . . . . . 17-53
CP-101AP . . . . . 17-59

**AUDIO**

AU-118P . . . . . 17-65
AFM-1A
FL-61 . . . . . 17-71
BF-28A
VR-42 . . . . . 17-77
CP-111
CP-113
HP-33
VR-62 . . . . . 17-83
SW-144A
VR-61
DP-72
DP-73
DP-74 . . . . . 17-91

**SERVO**

SV-82/82A . . . . . 17-99
SV-83/83A/83B . . . . . 17-105
SV-84P . . . . . 17-111
RE-28 / RE-36 / DR-56 / PTC-20 / PTC-21 / PTC-36 / DE-15 / RM-40 / TR-18 . . . . . 17-117

**SYSTEM CONTROL**

SY-61/61A/61B/61C . . . . . 17-125
SY-64AP . . . . . 17-133

**CONTROL PANEL**

KY-96B/96C / KY-107/107A / DP-71A / PTC-32 / PT-9 . . . . . 17-141

**TIME CODE**

TC-40AP . . . . . 17-149
SE-57 / PTC-31 / PTC-15 / PD-35 / RM-57 / CL-14 / CL-24 / CCM-2 / PC-32 / PC-33 / PC-41 / PC-47 / HC-11 . . . . . 17-155

**POWER SUPPLY**

AC-81/96 / M1 / M2 / C1 / C2 . . . . . 17-163

**FRAME**

MB-191/191A/191B/191C / MB-192 . . . . . 17-171

**18. SEMICONDUCTOR ELECTRODES**

**19. SPARE PARTS AND FIXTURE**

19-1. Parts Information . . . . . 19-1
19-2. Exploded View . . . . . 19-1
Supply Side Reel Chassis . . . . . 19-3
Take-up Side Reel Chassis . . . . . 19-5
Head Drum, Stationary Heads and Tape Guides Block . . . . . 19-7
Threading Ring Block . . . . . 19-10
T Drawer Arm Block . . . . . 19-13
Supply Tension Regulator Block . . . 19-15
Pinch Press Mechanism Block . . . . . 19-17
Function Control Chassis Block . . . . 19-20
Level Control Chassis Block . . . . . 19-23
Cassette-up Compartment . . . . . 19-26
Connector Panel Block . . . . . 19-29
Switching Regulator Block . . . . . 19-32
Printed Circuit Block (1) . . . . . 19-35
Printed Circuit Block (2) . . . . . 19-38
Ornamental Panel Block . . . . . 19-41
19-3. Electrical Parts List . . . . . 19-47
19-4. Packing Material and Accessories (Supplied) . . . . . 19-111
19-5. Fixture (Option) . . . . . 19-111

# SECTION 15
# BLOCK DIAGRAM

# OVERALL

NOTE

| MARK | CHANGE INFORMATION | SERIAL NO. |
|---|---|---|
| *1 | DEC-39A → DEC-46AP | S/N 10623 ~ |

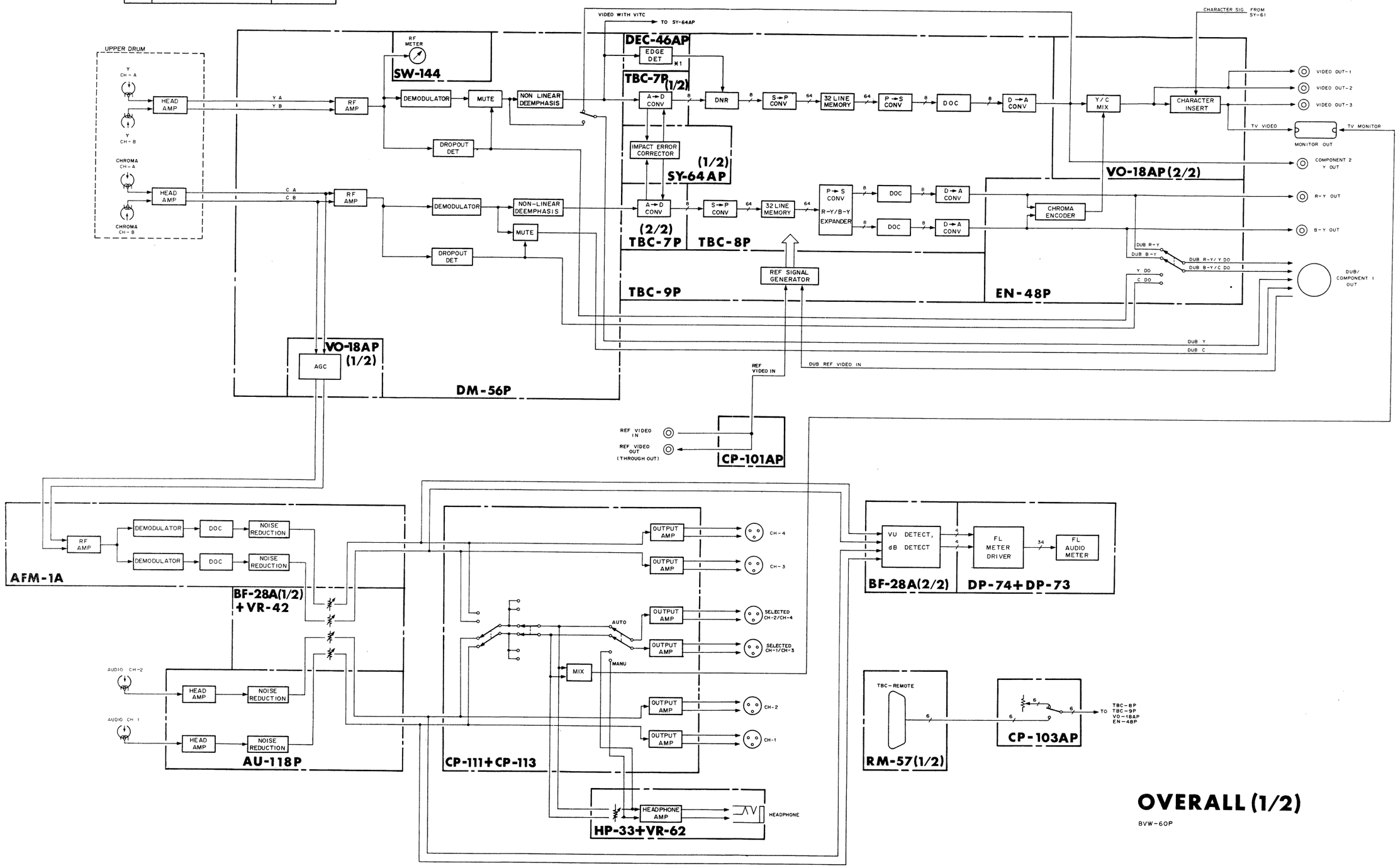


## OVERALL (1/2)

BVW-60P

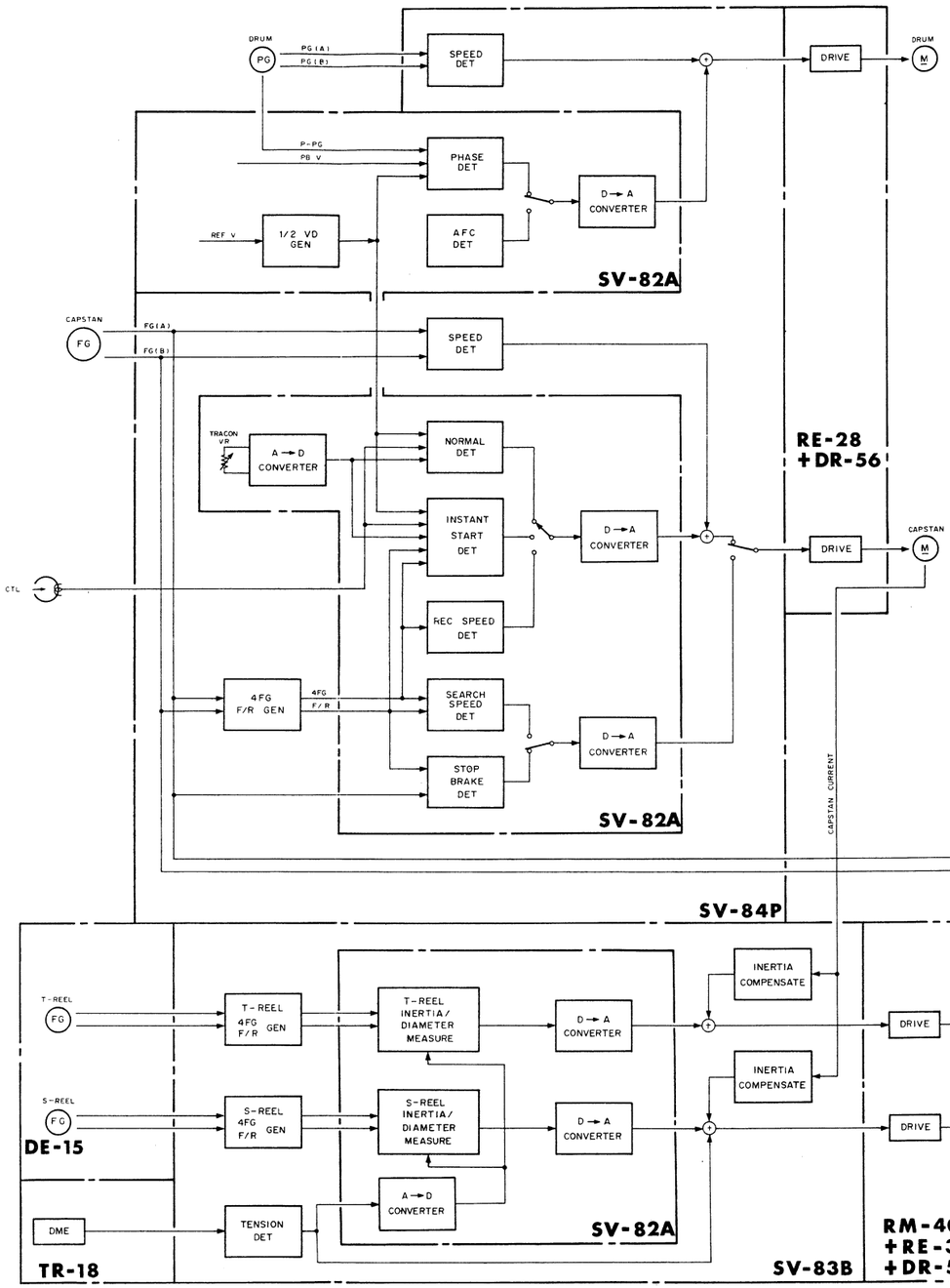


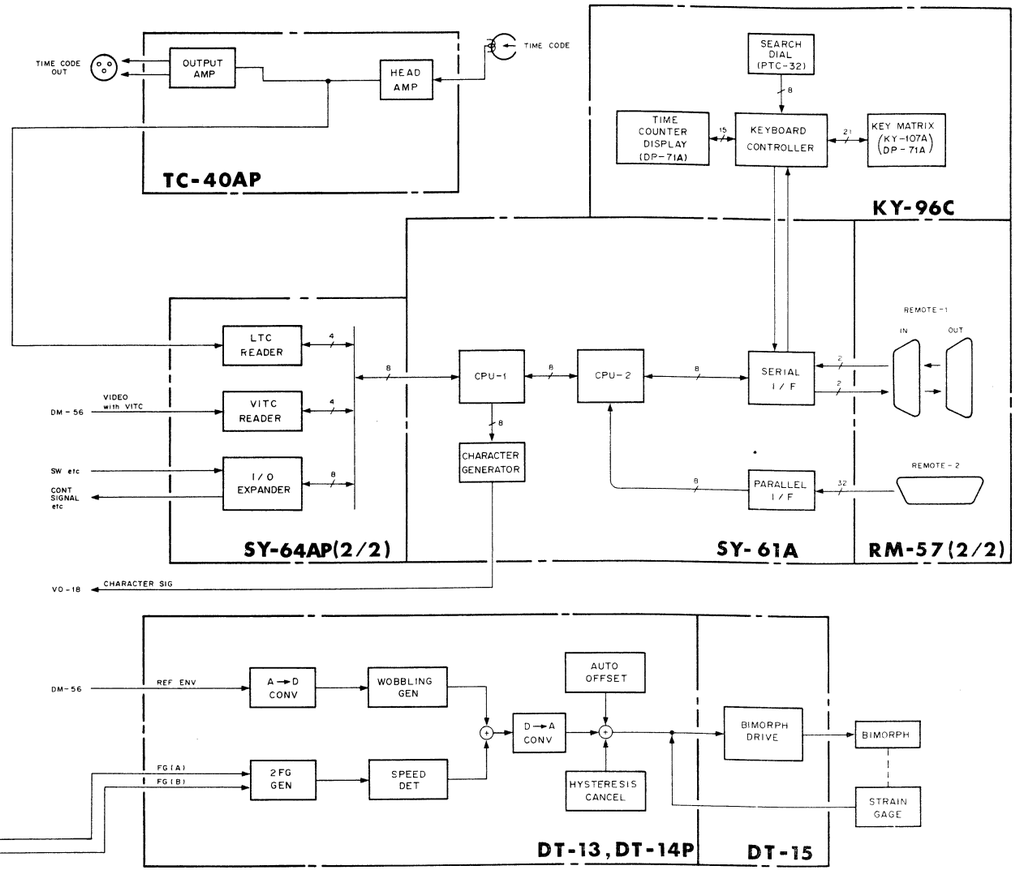


Note on Block Diagram

See the overall block diagram for the connector destination's board name in each board's block diagram.

# OVERALL (2/2)

BVW-60P

# Y/C DEMODULATOR

S/N 10001 through 10270

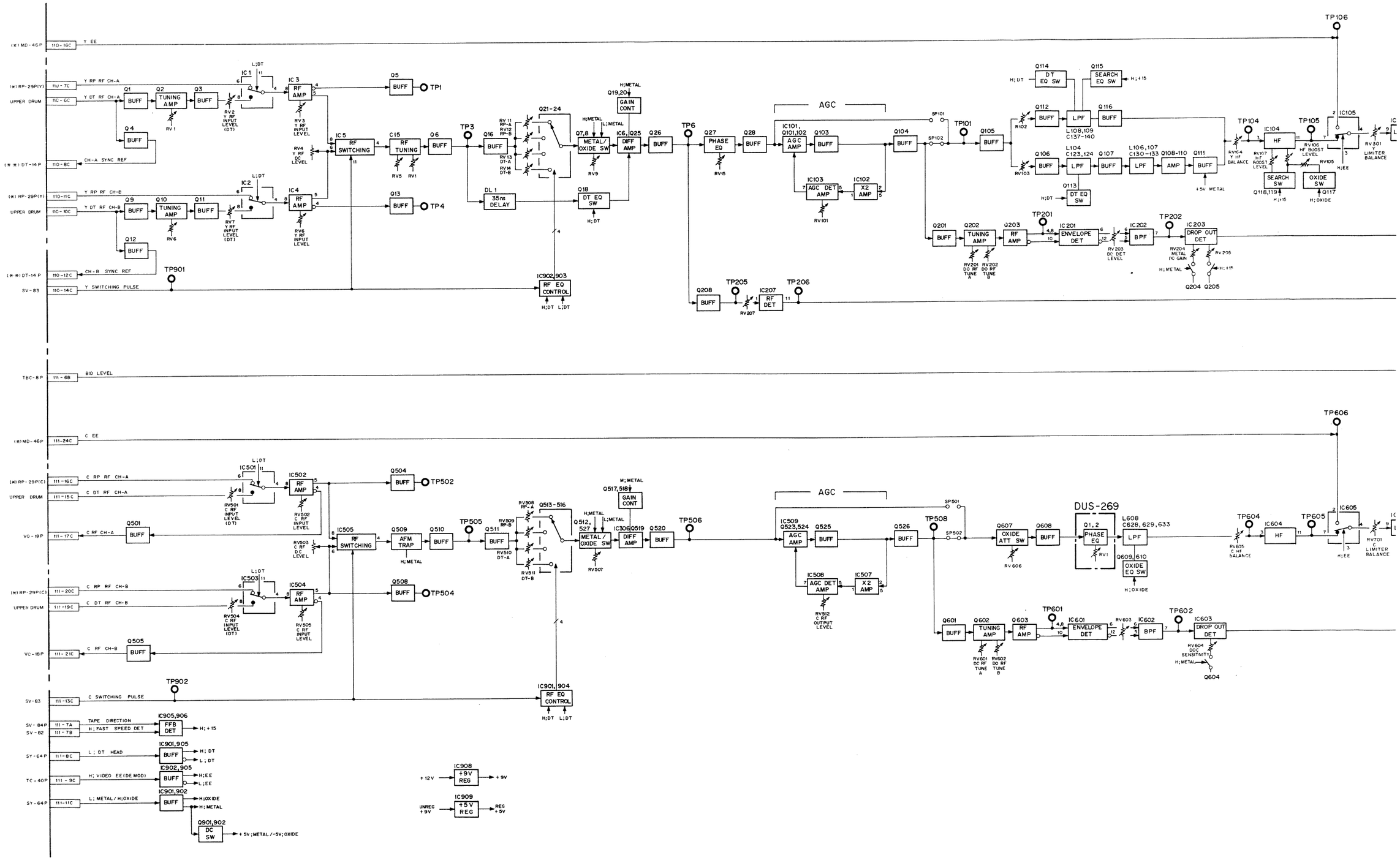


15-9(a)

15-10(a)

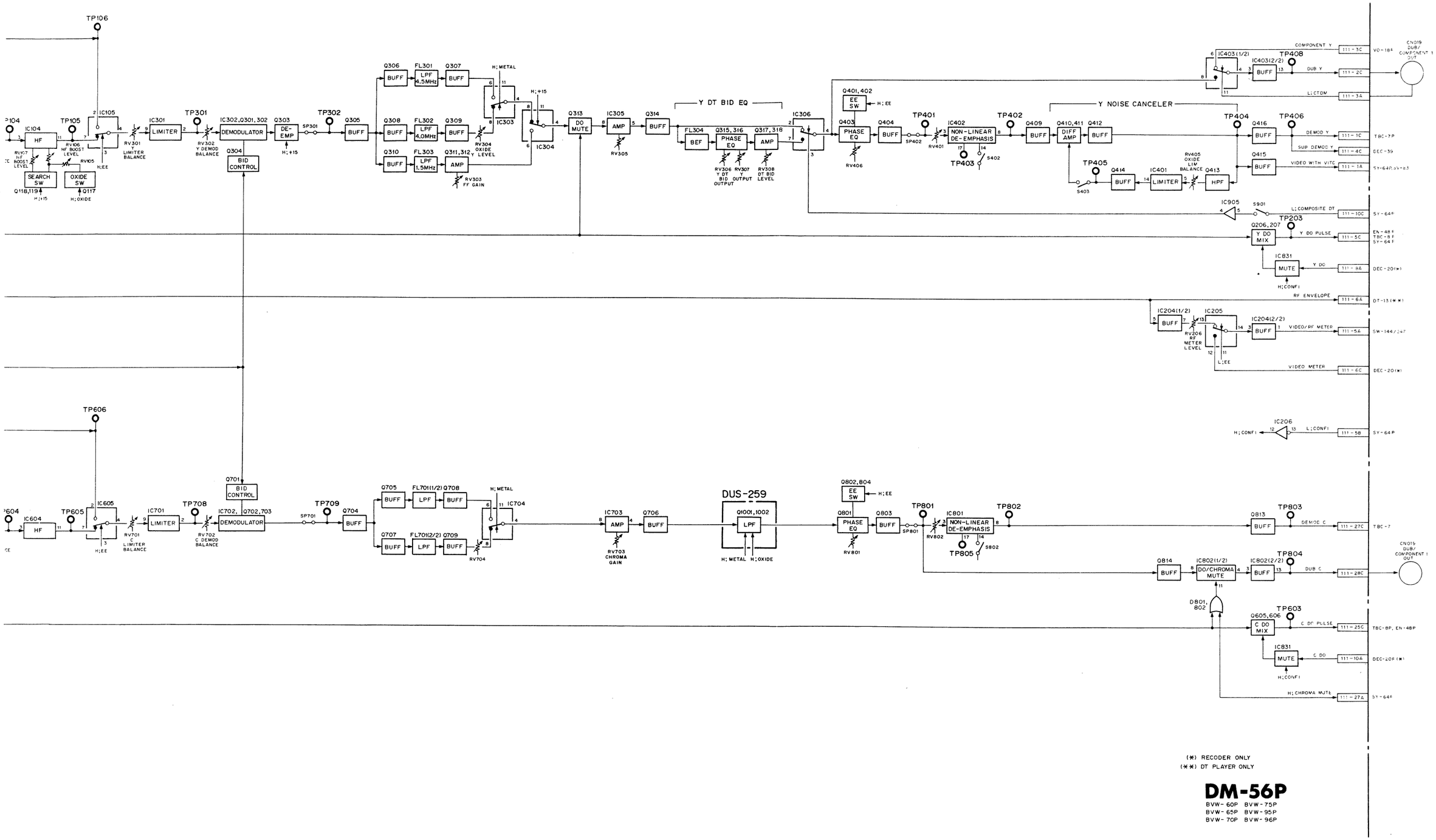


(*) RECODER ONLY
(**) DT PLAYER ONLY

**DM-56P**

BVW-60P BVW-75P
BVW-65P BVW-95P
BVW-70P BVW-96P

TBC TBC

# A/D CONVERTER
# WRITE CLOCK GENERATOR

S/N 10001 through 10270

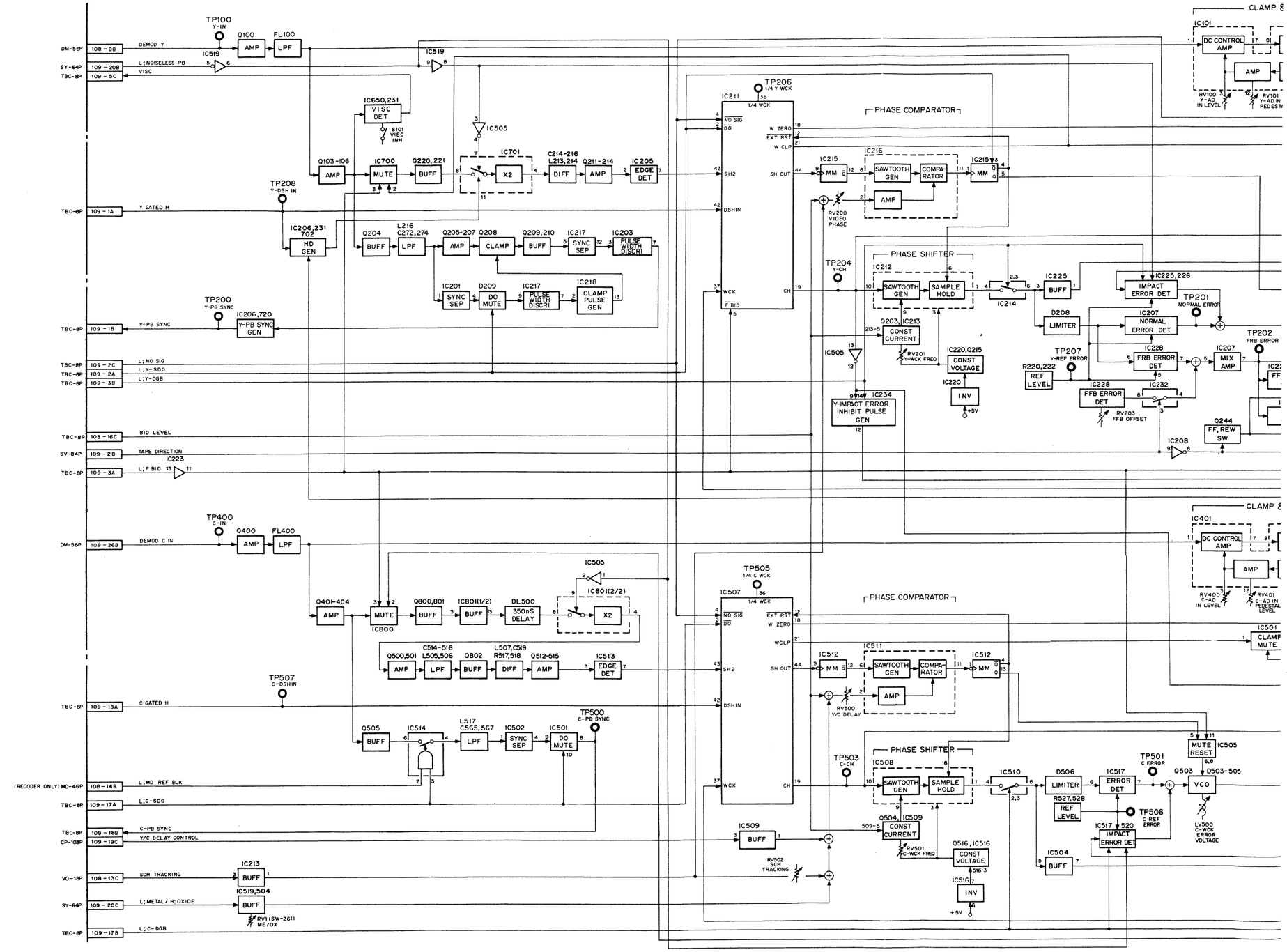


15-13(a)

15-14(a)

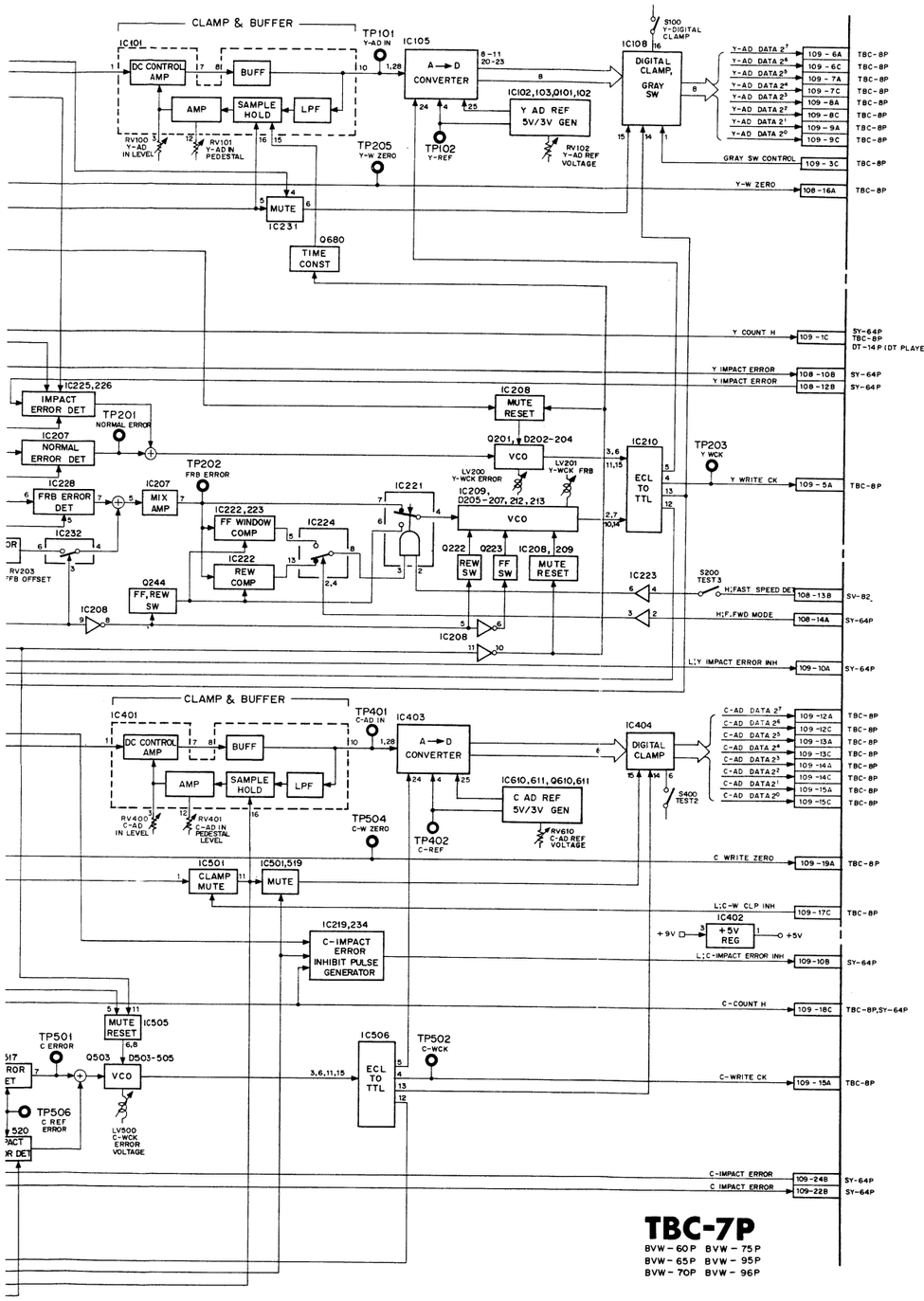


**TBC-7P**

BVW-60P BVW-75P
BVW-65P BVW-95P
BVW-70P BVW-96P

# Y/C DEMODULATOR

S/N 10271 and higher

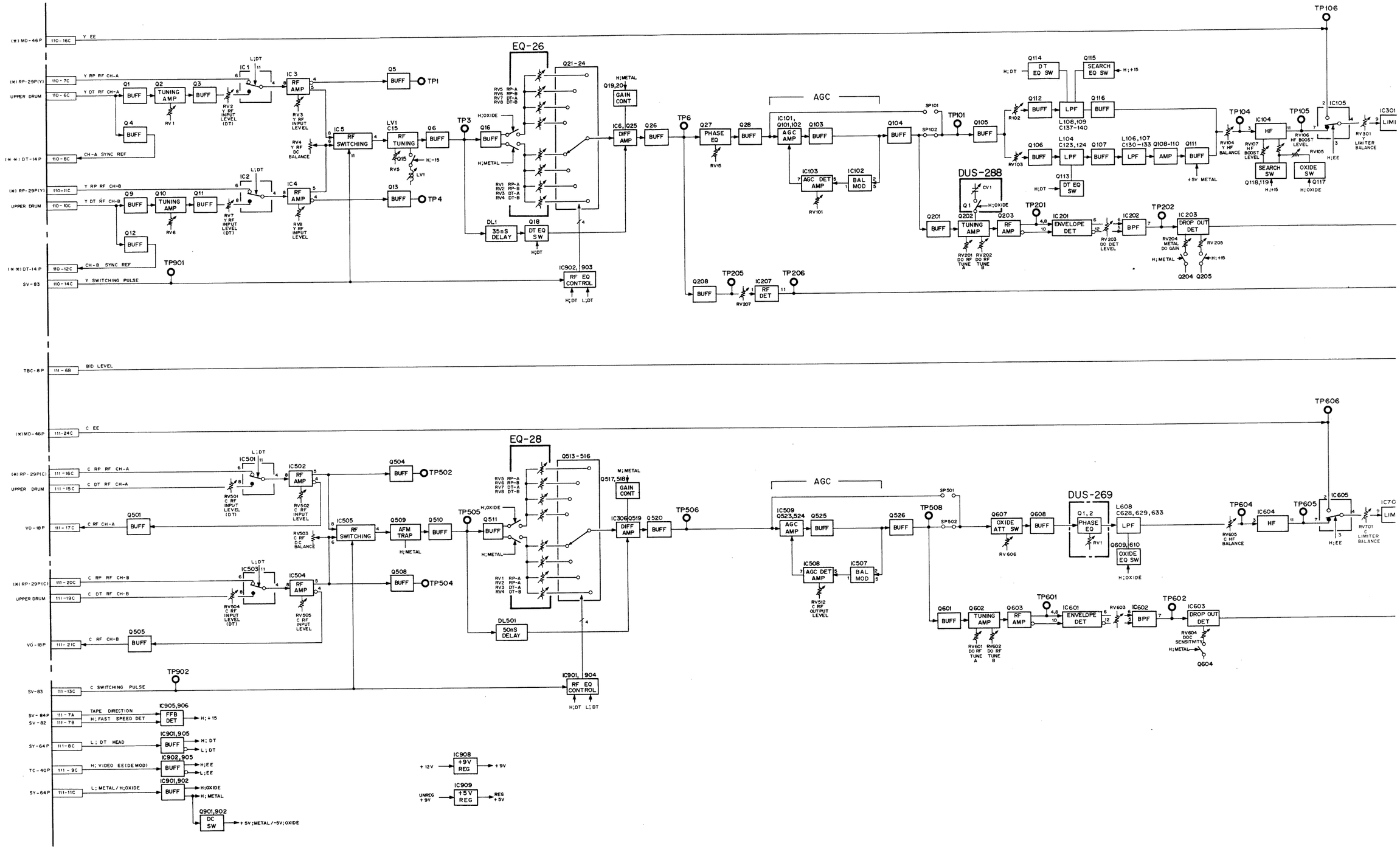


15-9(b)

15-10(b)

# Y/C DEMOD Y/C DEMOD

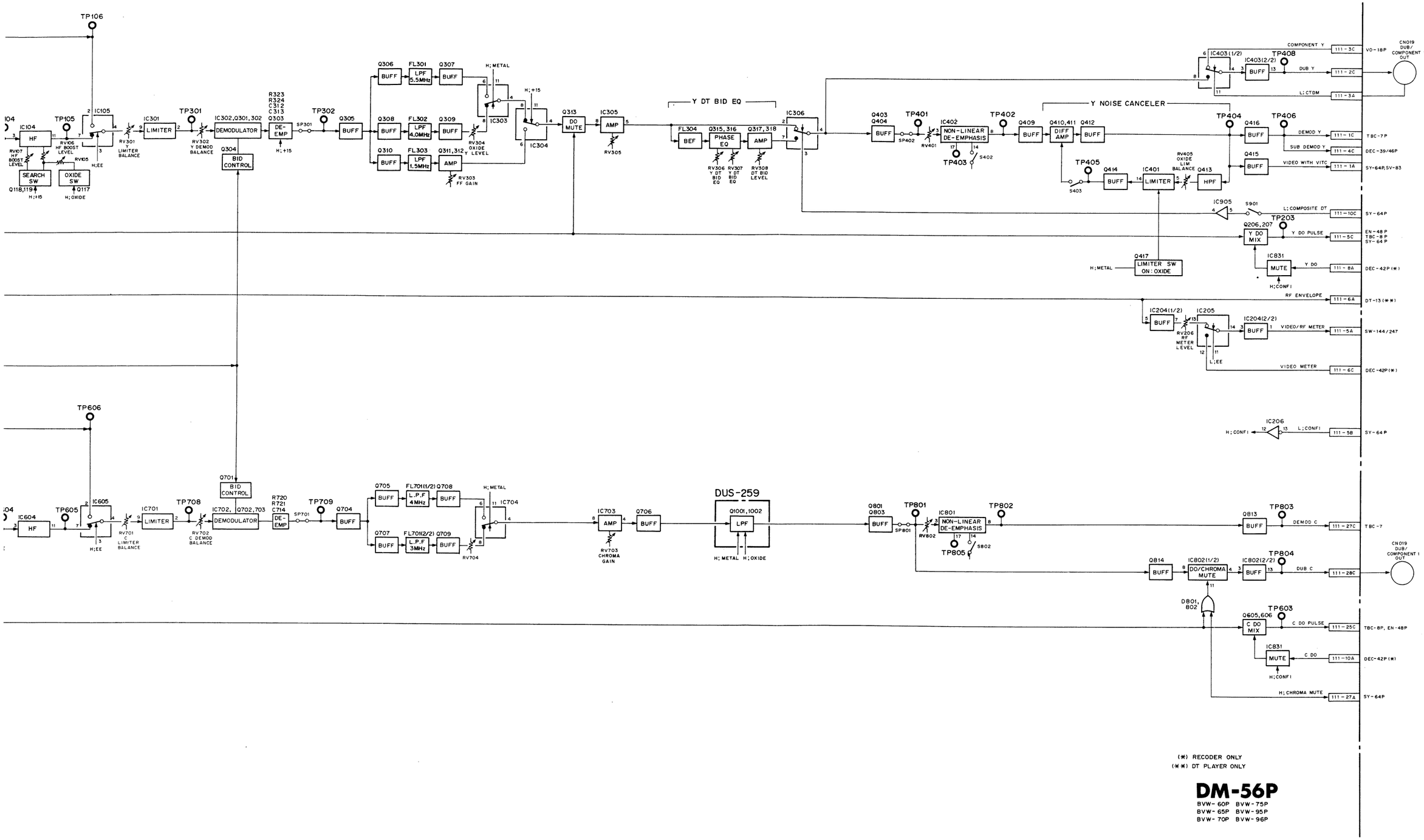


(*) RECODER ONLY
(**) DT PLAYER ONLY

**DM-56P**

BVW-60P BVW-75P
BVW-65P BVW-95P
BVW-70P BVW-96P

TBC TBC

# A/D CONVERTER WRITE CLOCK GENERATOR

S/N 10271 through 10712

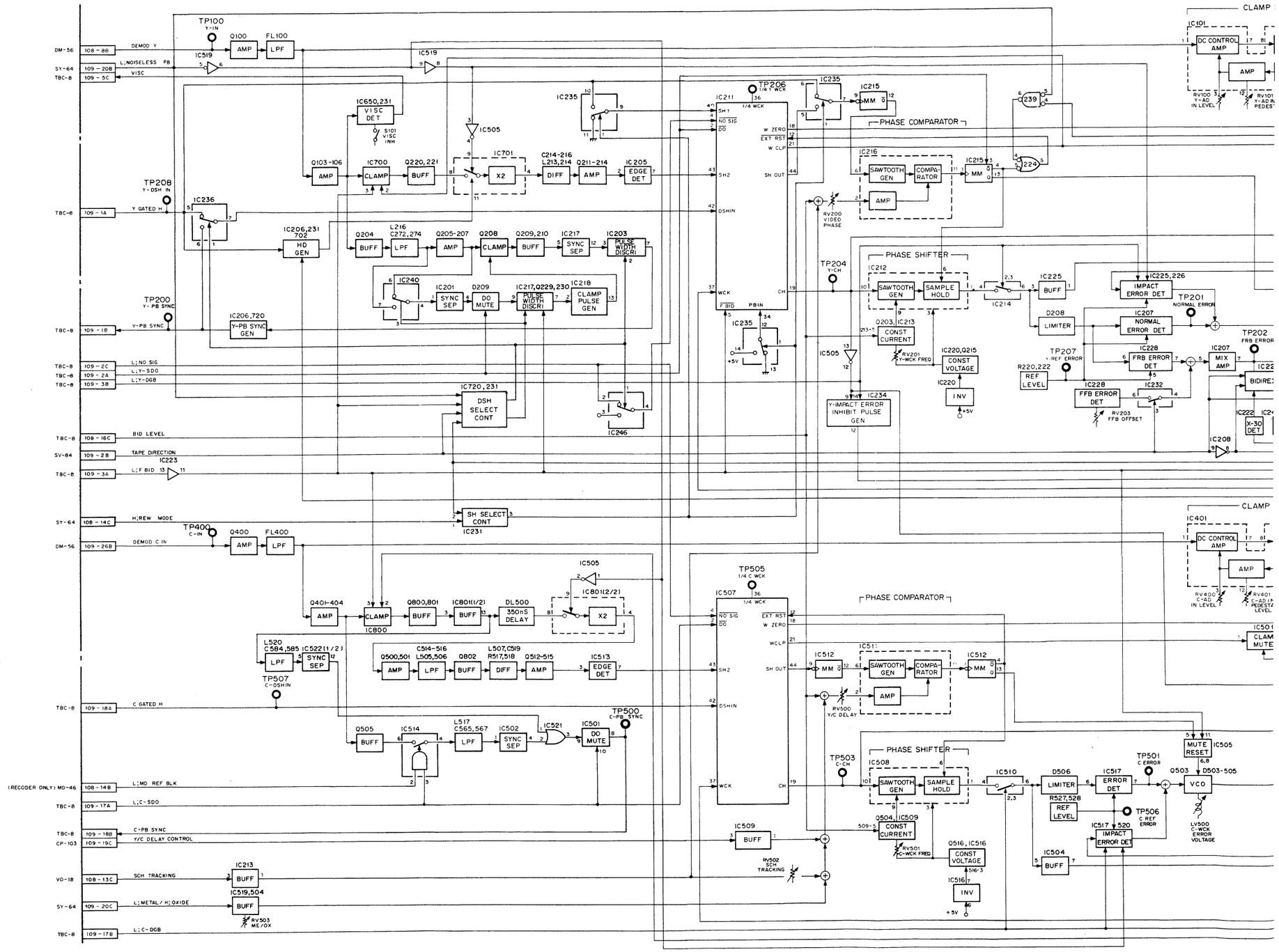


15-13 (b)

15-14 (b)

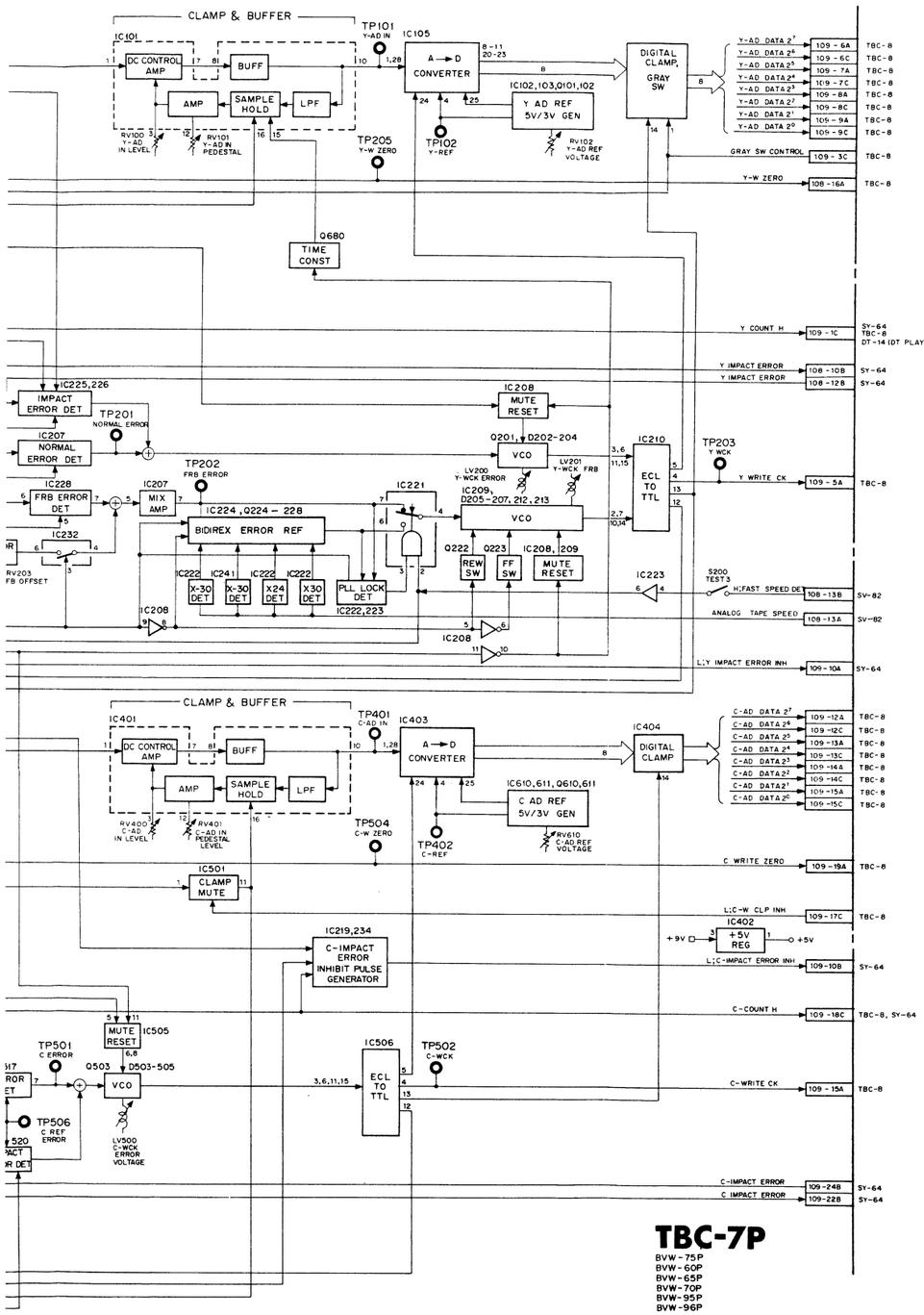


**TBC-7P**

BVW-75P
BVW-60P
BVW-65P
BVW-70P
BVW-95P
BVW-96P

# Y/C DEMODULATOR

S/N 10271 and higher

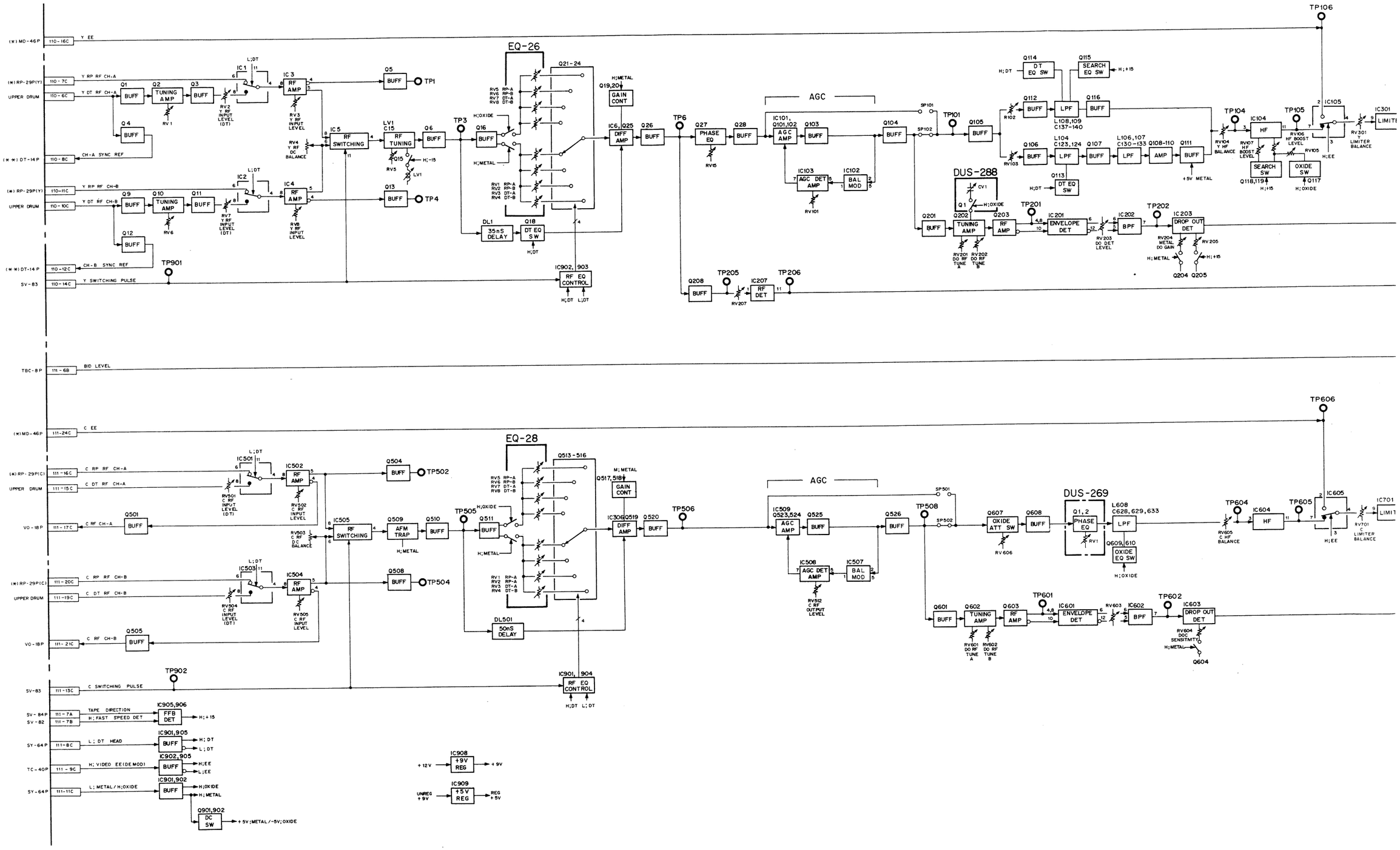


15-9(b)

15-10(b)

# Y/C DEMOD Y/C DEMOD

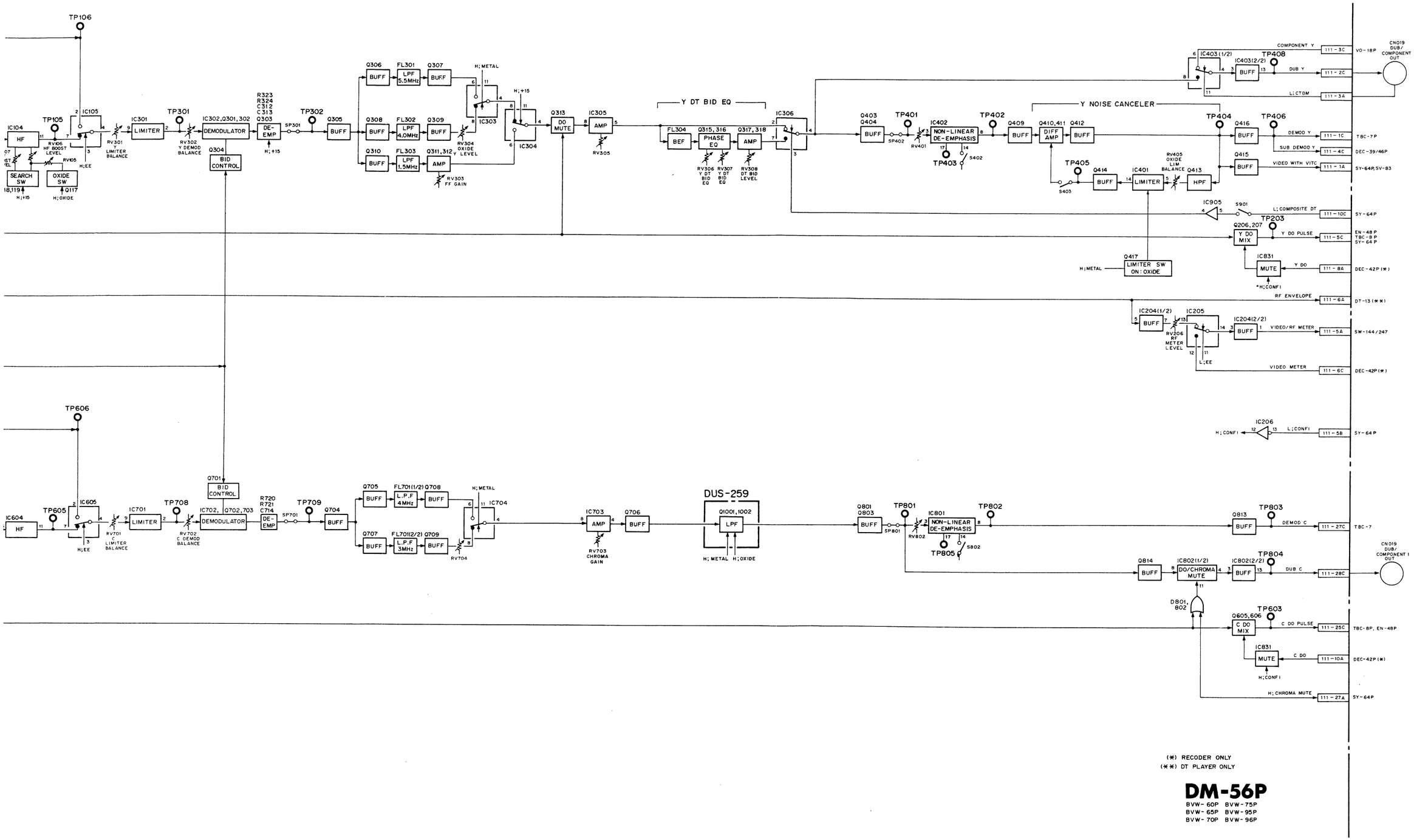


(*) RECODER ONLY
(**) DT PLAYER ONLY

**DM-56P**

BVW-60P BVW-75P
BVW-65P BVW-95P
BVW-70P BVW-96P

TBC TBC

# A/D CONVERTER
# WRITE CLOCK GENERATOR

S/N 10713 and higher

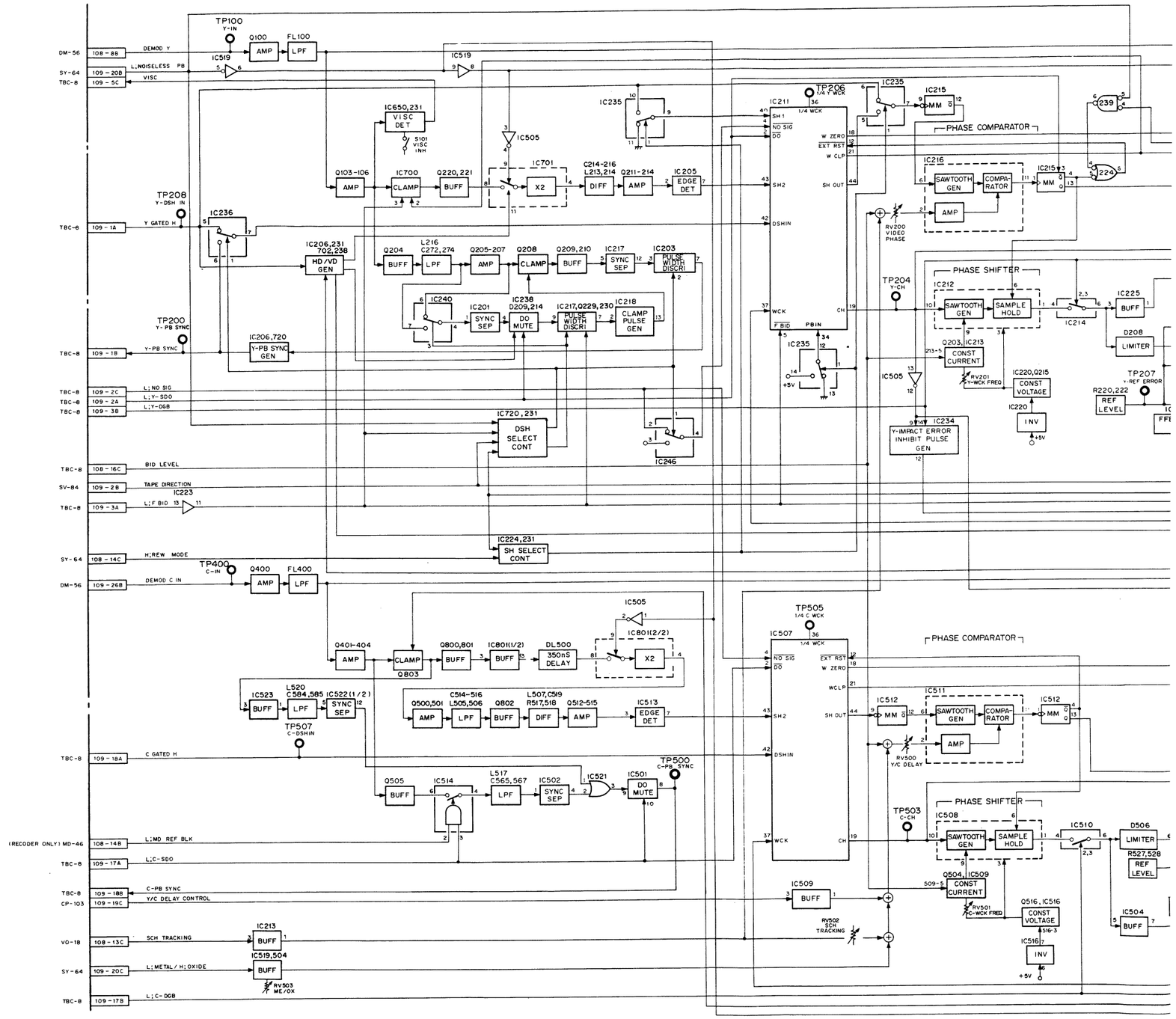

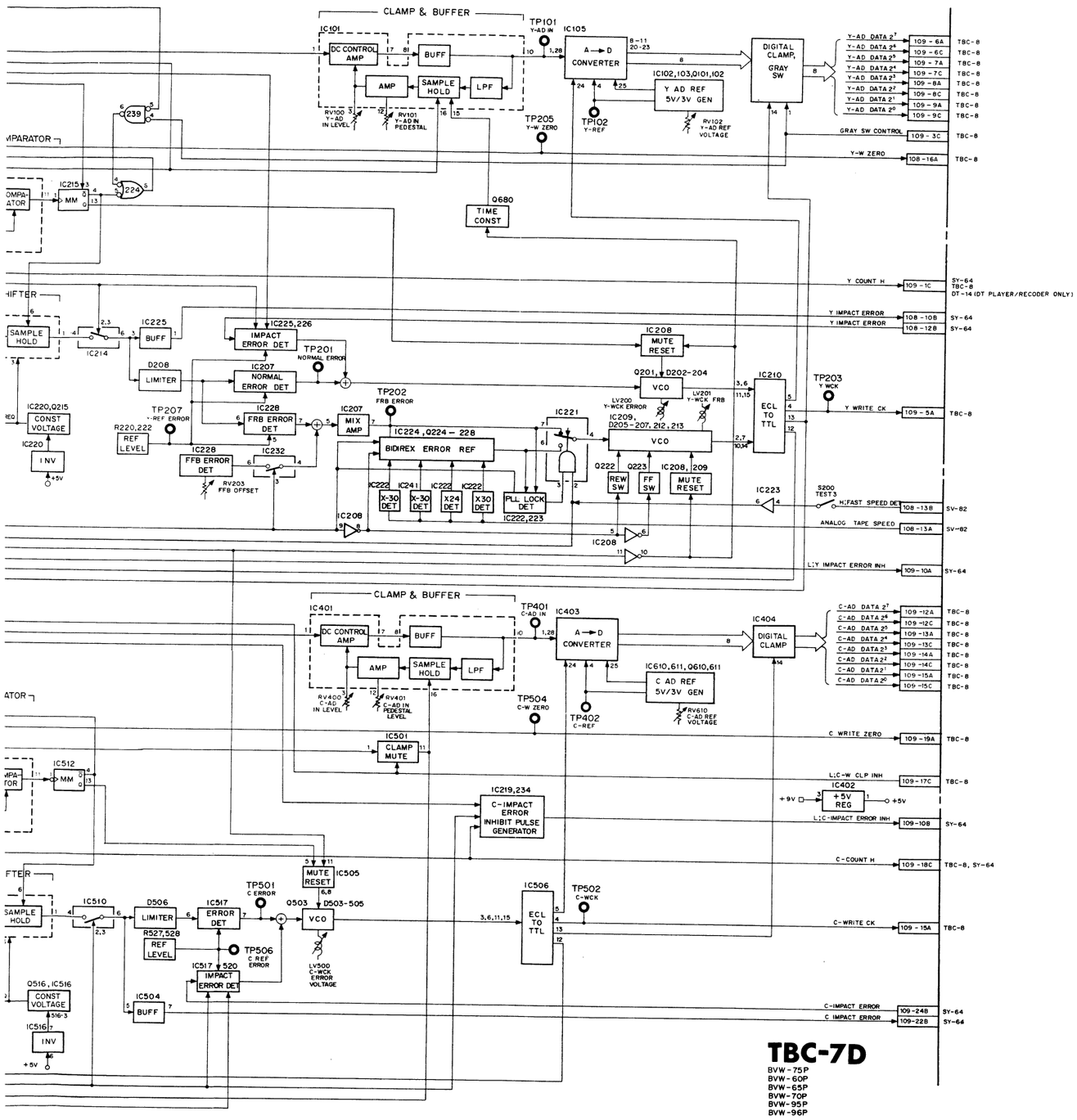


**TBC-7D**

BVW-75P
BVW-60P
BVW-65P
BVW-70P
BVW-95P
BVW-96P

# MAIN MEMORY
# D/A CONVERTER
# Y DIGITAL NOISE REDUCTION
# EDGE DETECTOR

S/N 10001 through 10355

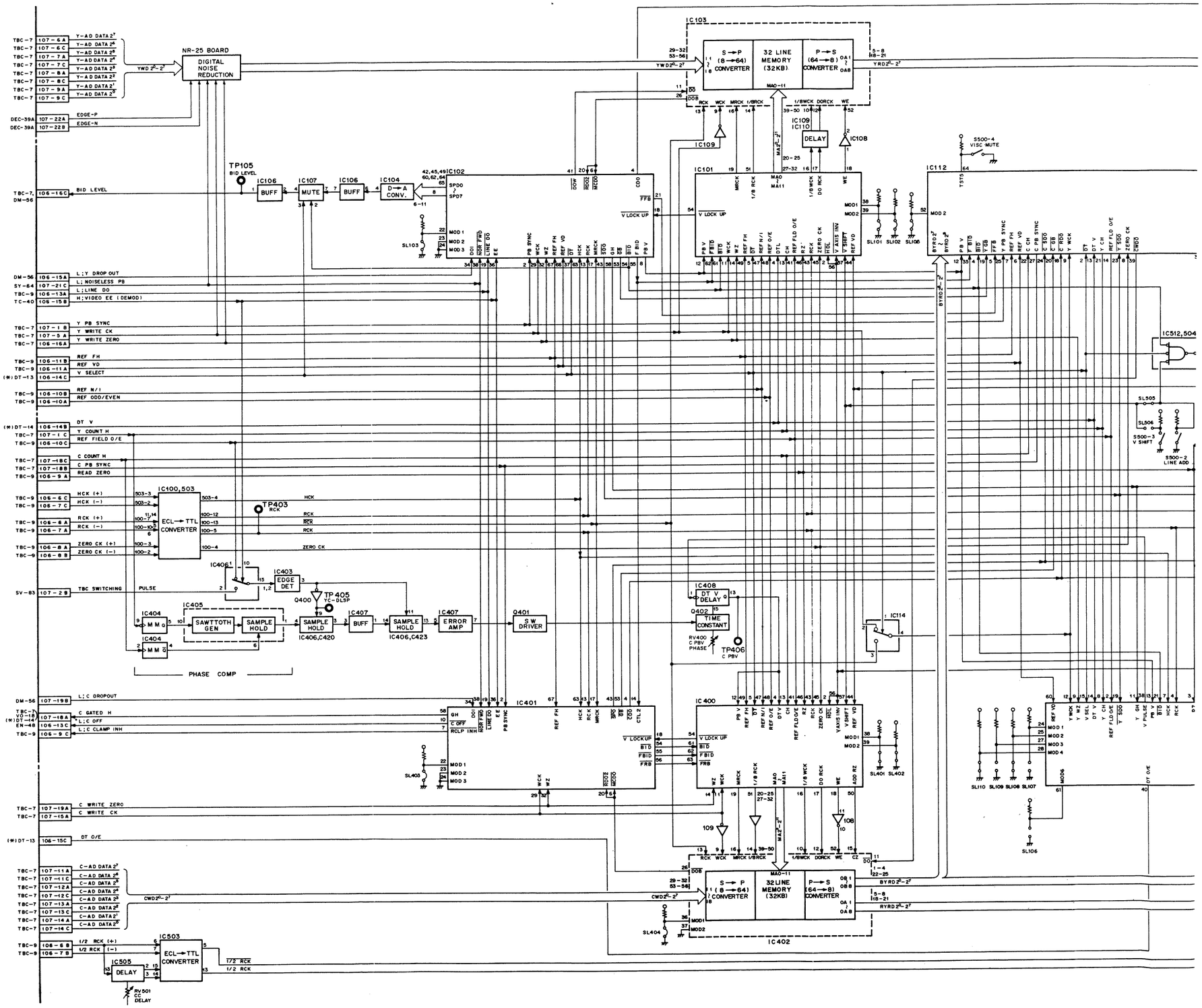


15-17(a)

15-18(a)

TBC TBC

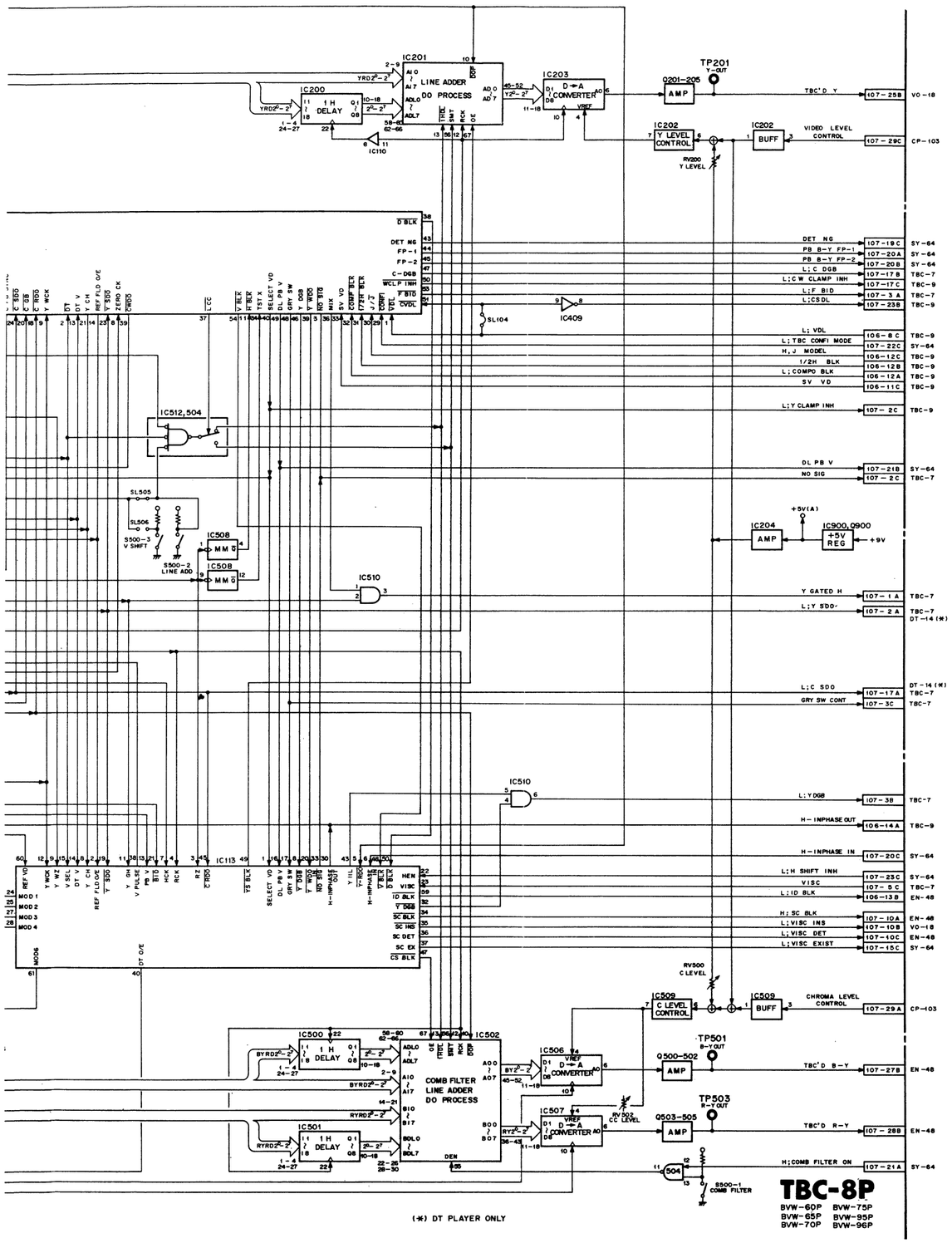


15-19(a)

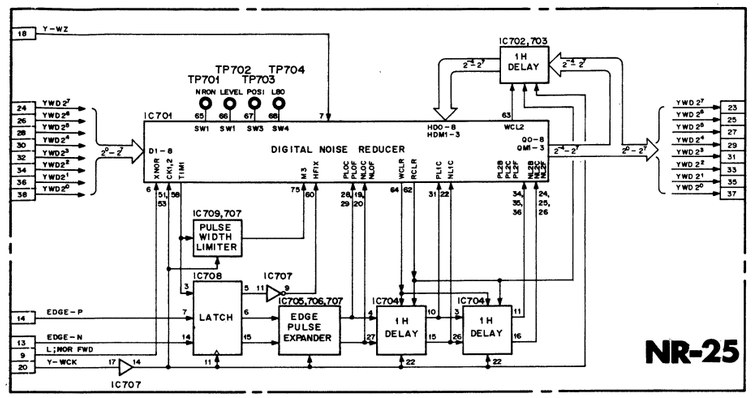


S/N 10001 through 10622

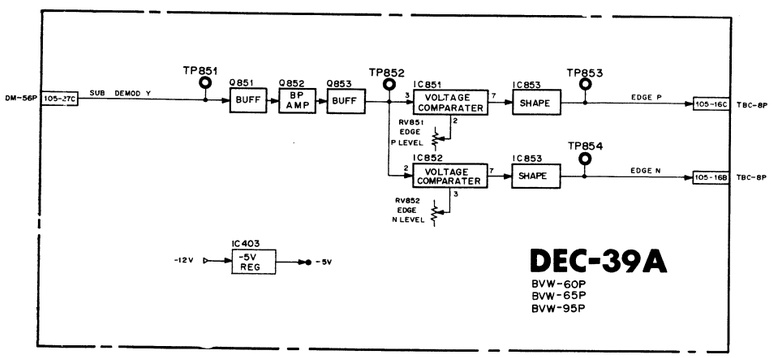


15-20(a)

TBC TBC

# REF SIGNAL/TIMING GENERATOR

S/N 10001 through 10060

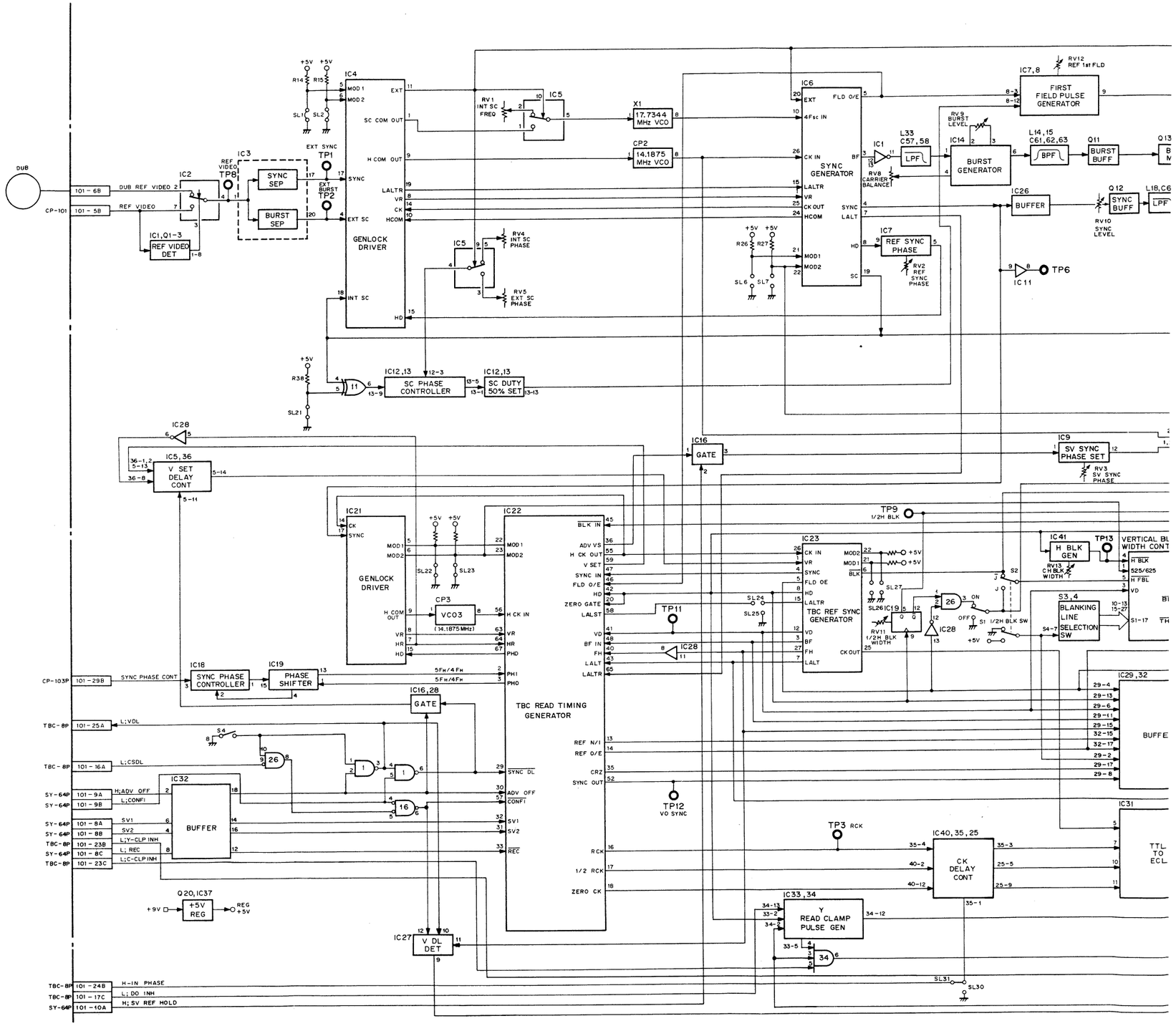


15-21(a)

15-22(a)

TBC TBC

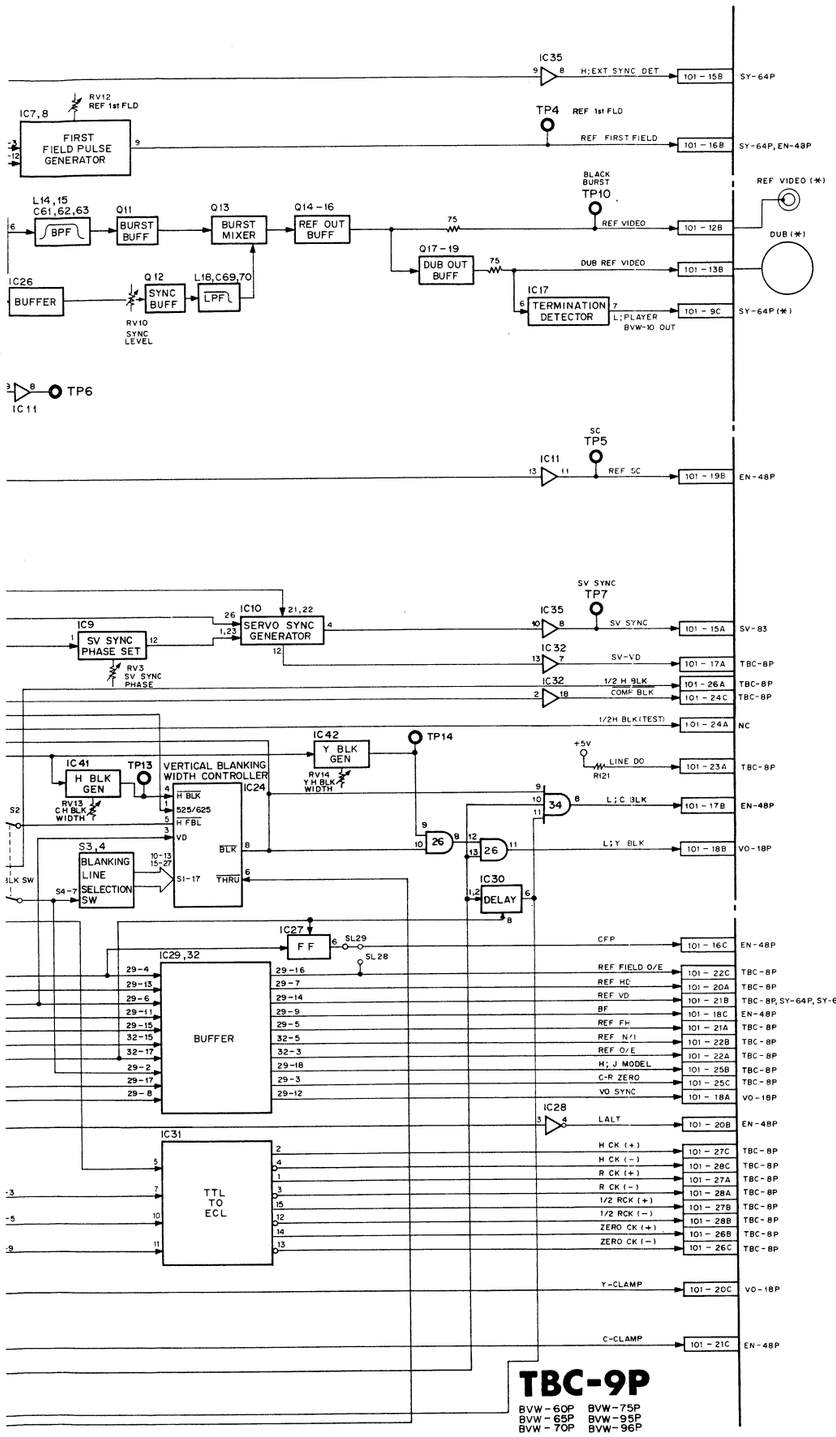


**TBC-9P**

BVW-60P BVW-75P
BVW-65P BVW-95P
BVW-70P BVW-96P

(*) RECODER ONLY

# MAIN MEMORY
# D/A CONVERTER
# Y DIGITAL NOISE REDUCTION
# EDGE DETECTOR

S/N 10356 through 10712

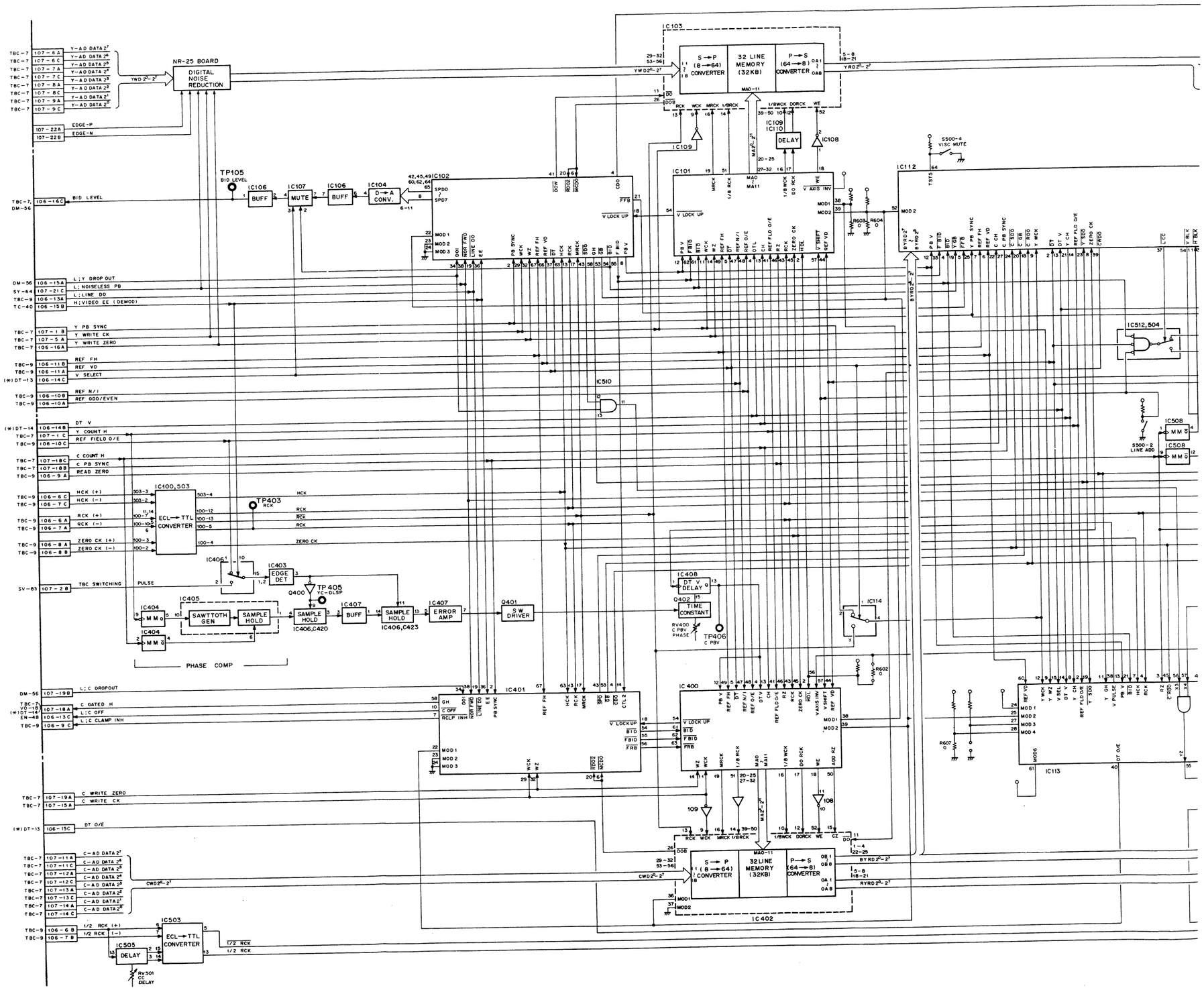

TBC TBC

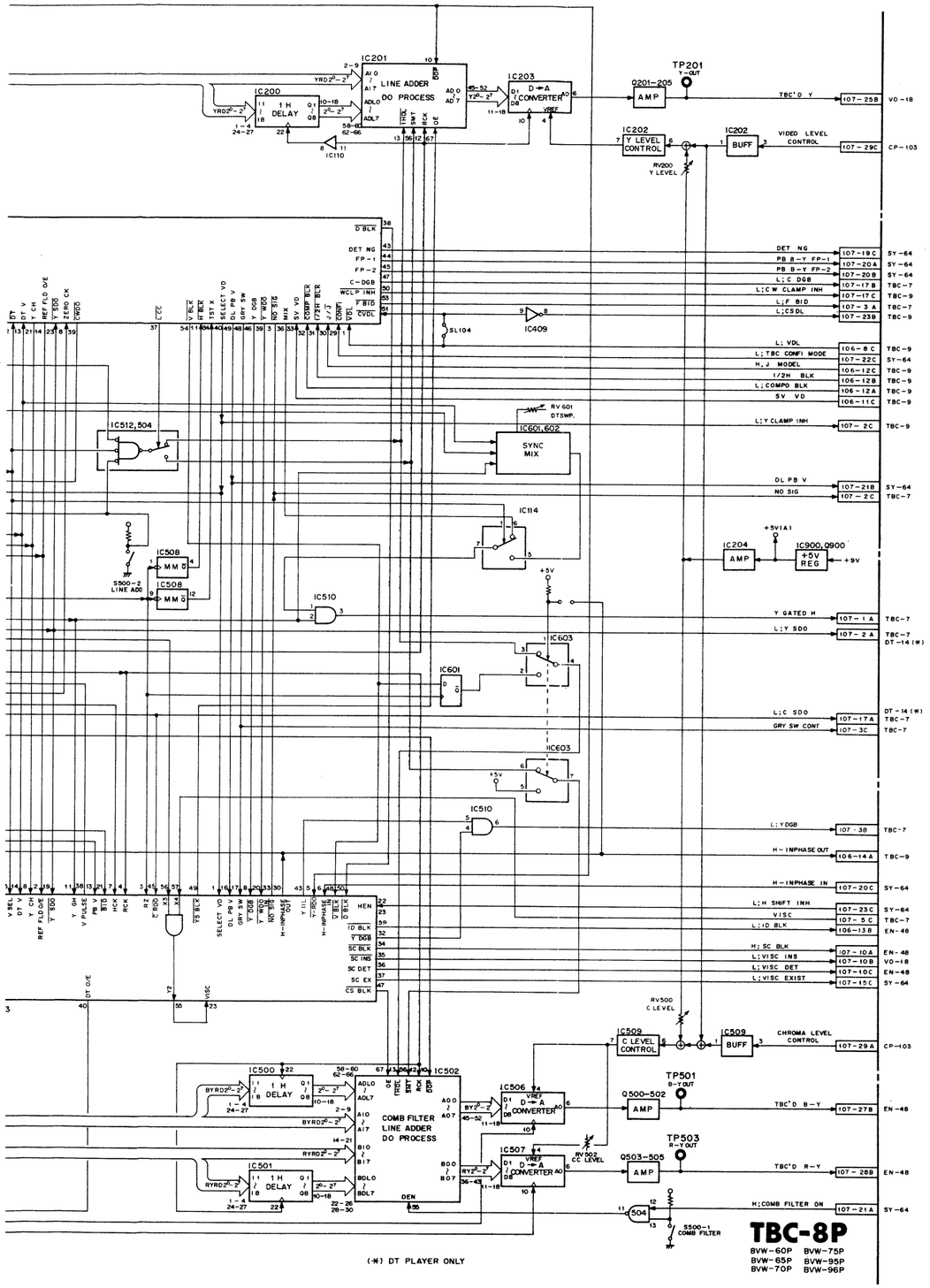


(*) DT PLAYER ONLY

15-19(b)

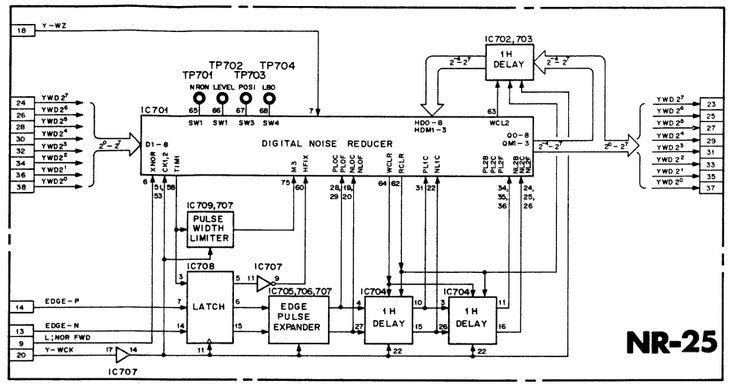


S/N 10623 and higher

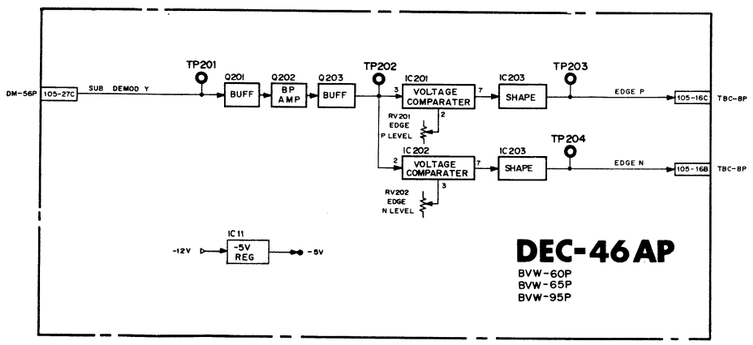


15-20(b)

TBC TBC

# REF SIGNAL/TIMING GENERATOR

S/N 10061 and higher

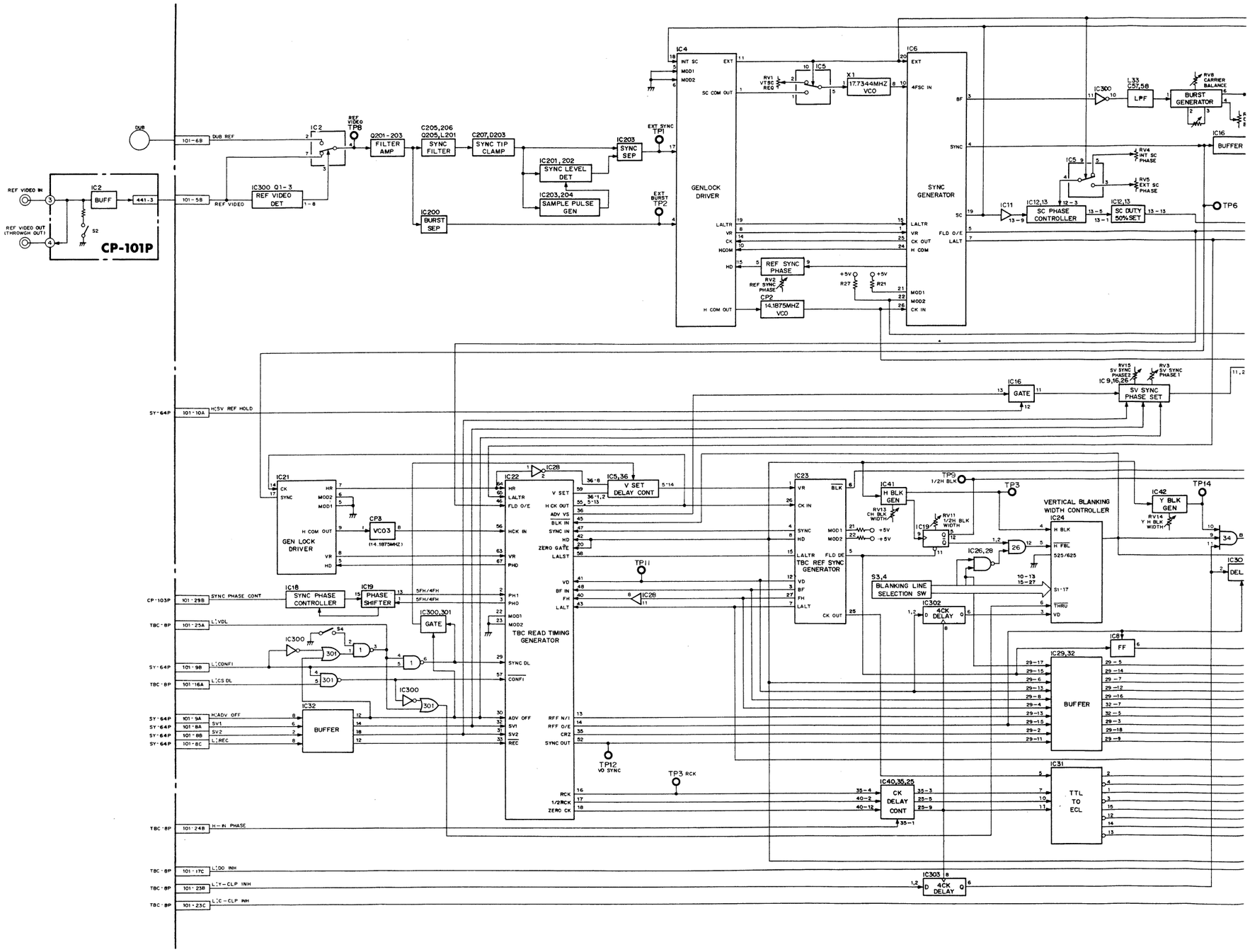

TBC TBC

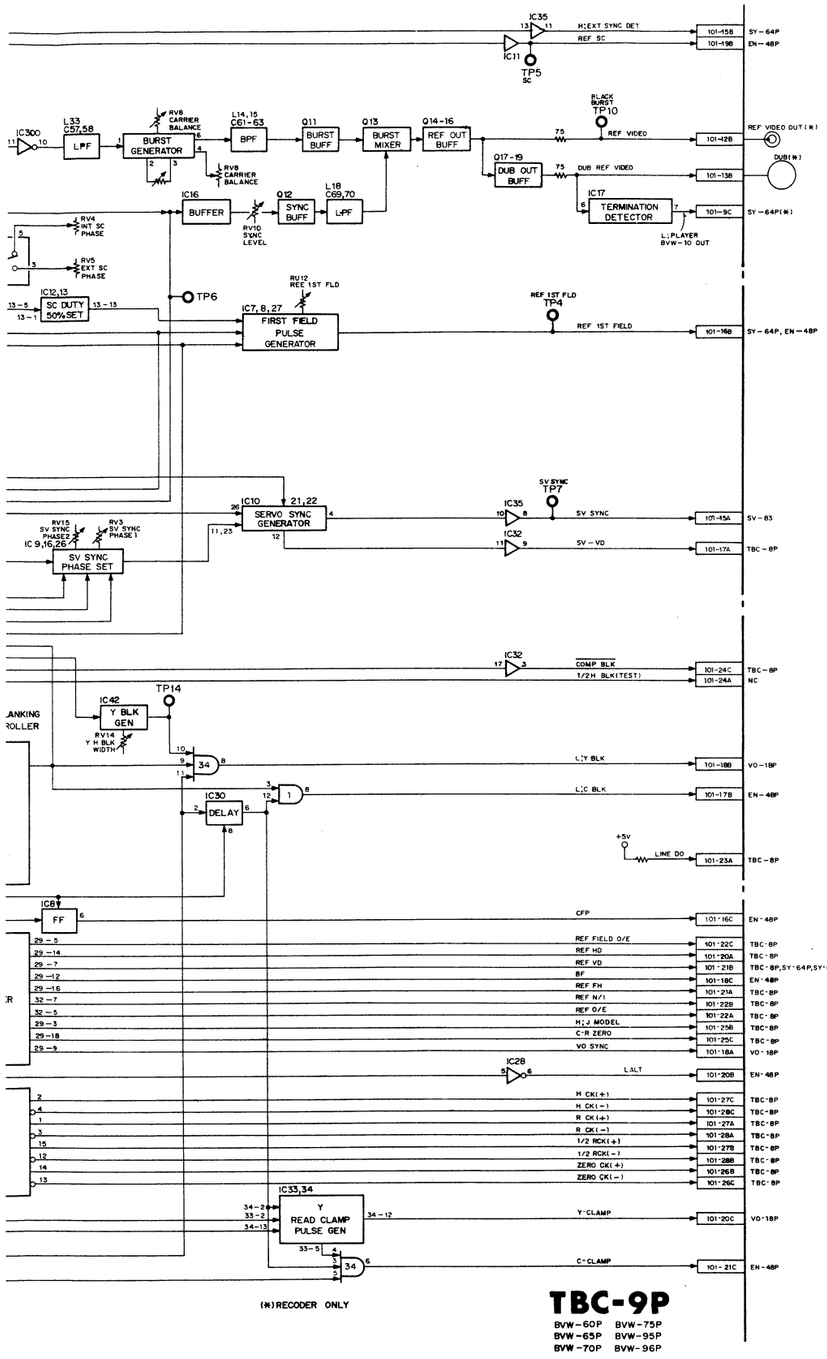


**TBC-9P**

BVW-60P BVW-75P
BVW-65P BVW-95P
BVW-70P BVW-96P

# MAIN MEMORY
# D/A CONVERTER
# Y DIGITAL NOISE REDUCTION

S/N 10713 and higher

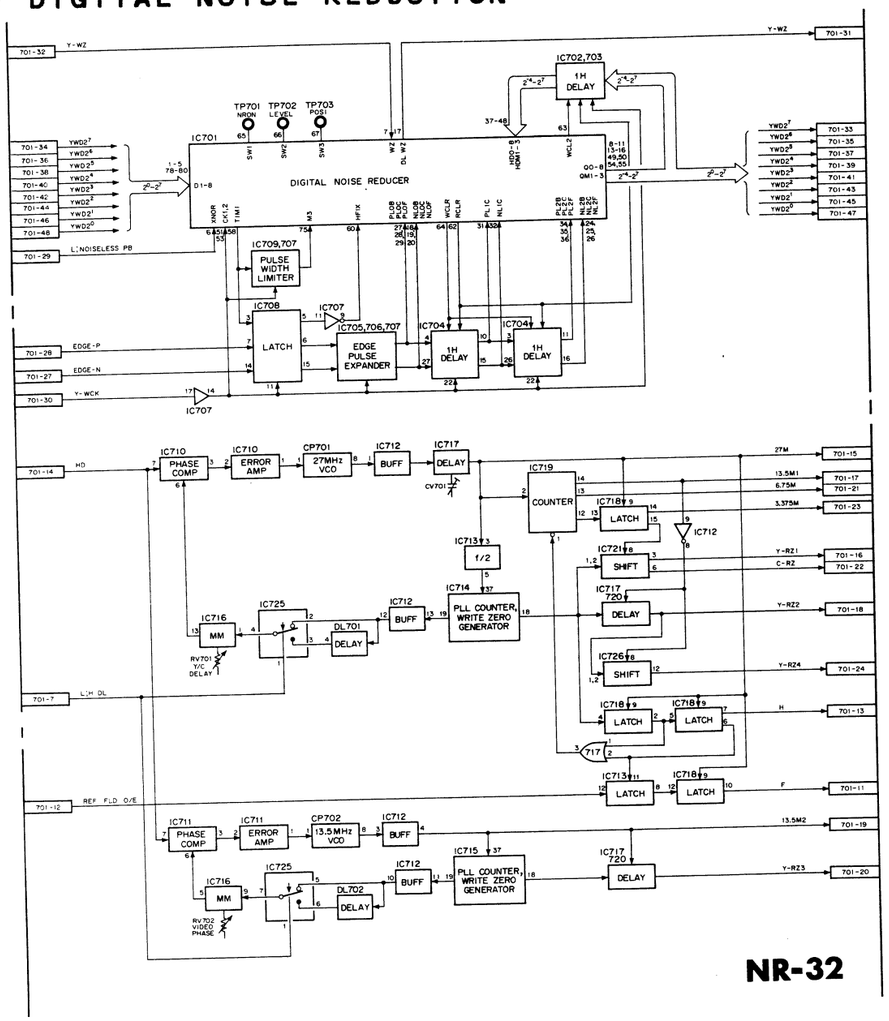


S/N 10623 and higher

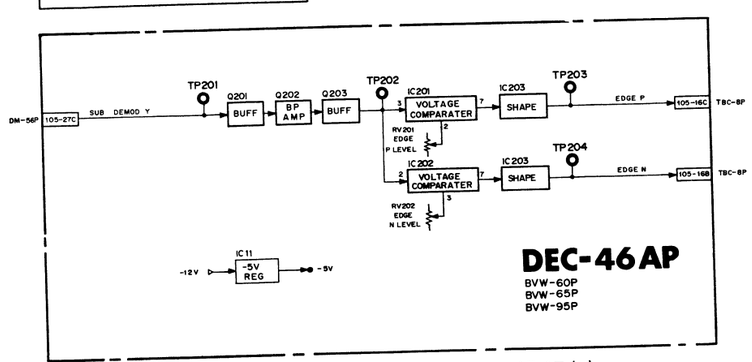


**DEC-46AP**
BVW-60P
BVW-65P
BVW-95P

**NR-32**

15-17 (c)

TBC TBC

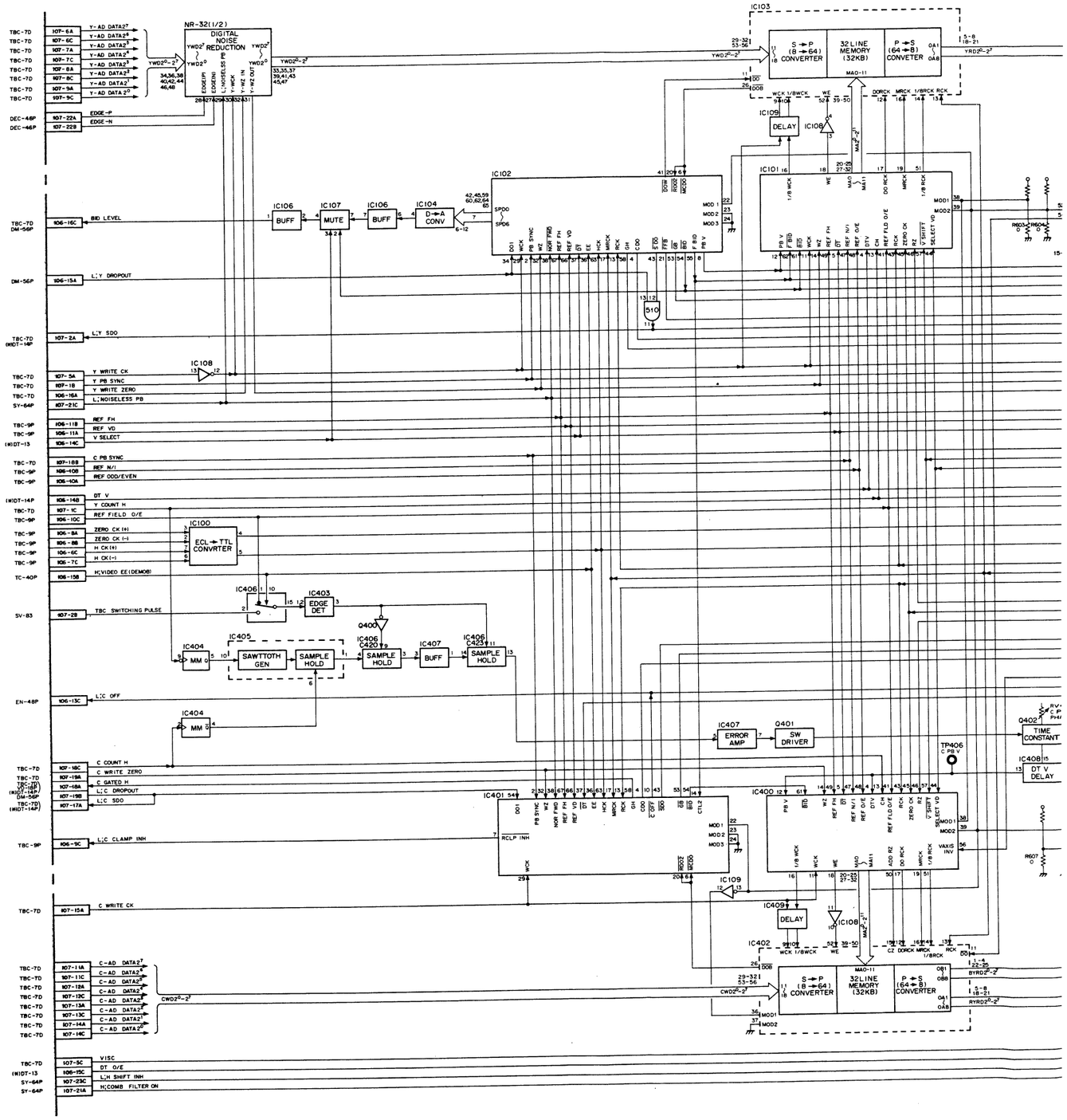


15-18 (c)

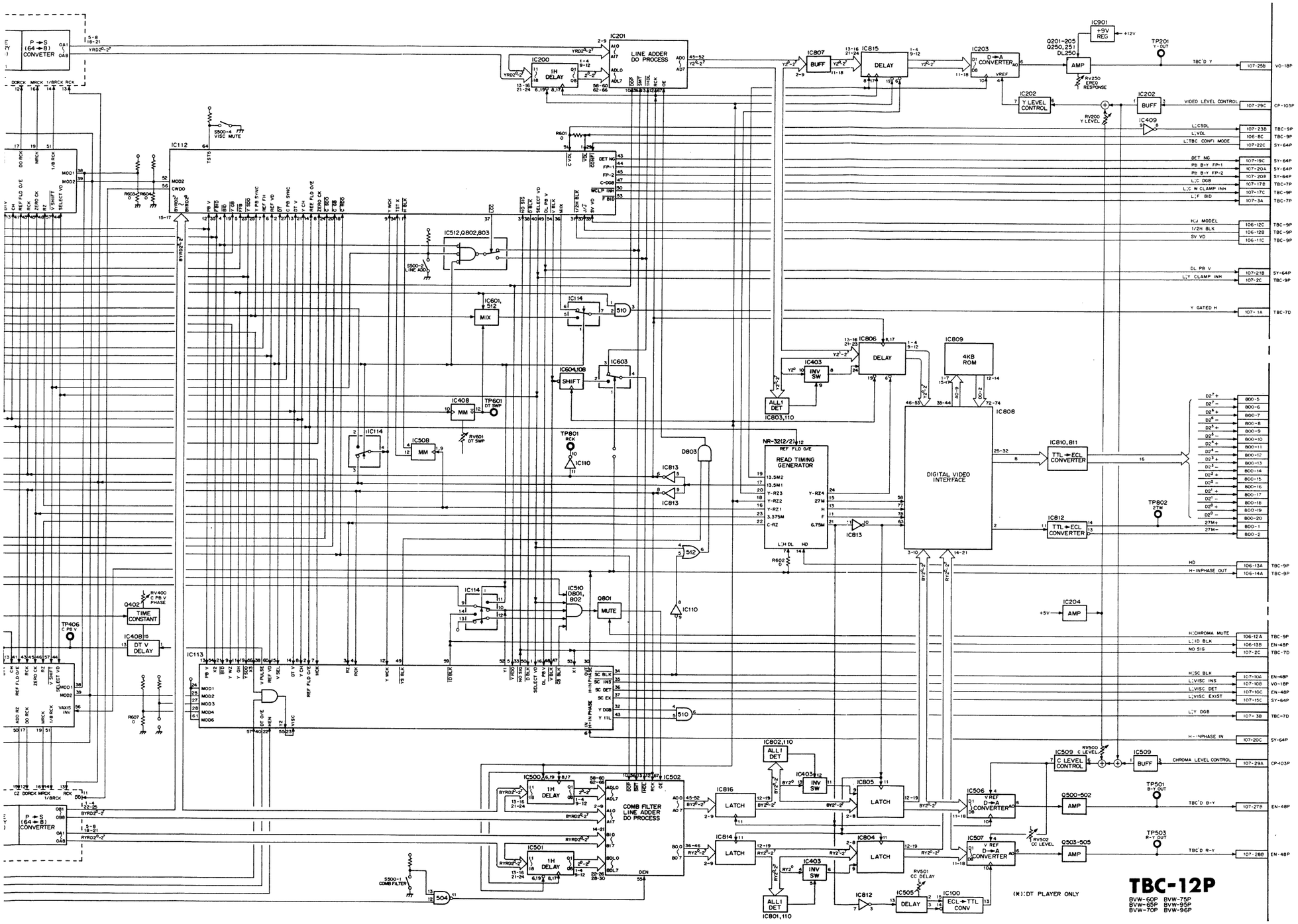
TBC-12P
BVW-60P BVW-75P
BVW-65P BVW-95P
BVW-70P BVW-96P
(*):DT PLAYER ONLY
LINE ADDER DO PROCESS
COMB FILTER LINE ADDER DO PROCESS
READ TIMING GENERATOR
DIGITAL VIDEO INTERFACE
4KB ROM
TTL→ECL CONVERTER
ECL→TTL CONV
Y LEVEL CONTROL
C LEVEL CONTROL
TIME CONSTANT
DT V DELAY
MUTE
MIX
SHIFT
DELAY
LATCH
AMP
BUFF
+9V REG
P→S (64→8) CONVERTER
1H DELAY
D→A CONVERTER
V REF D→A CONVERTER
ALL1 DET
INV SW
VIDEO LEVEL CONTROL
CHROMA LEVEL CONTROL
TBC'D Y
TBC'D B-Y
TBC'D R-Y

TBC TBC

# REF SIGNAL/TIMING GENERATOR

S/N 10061 and higher

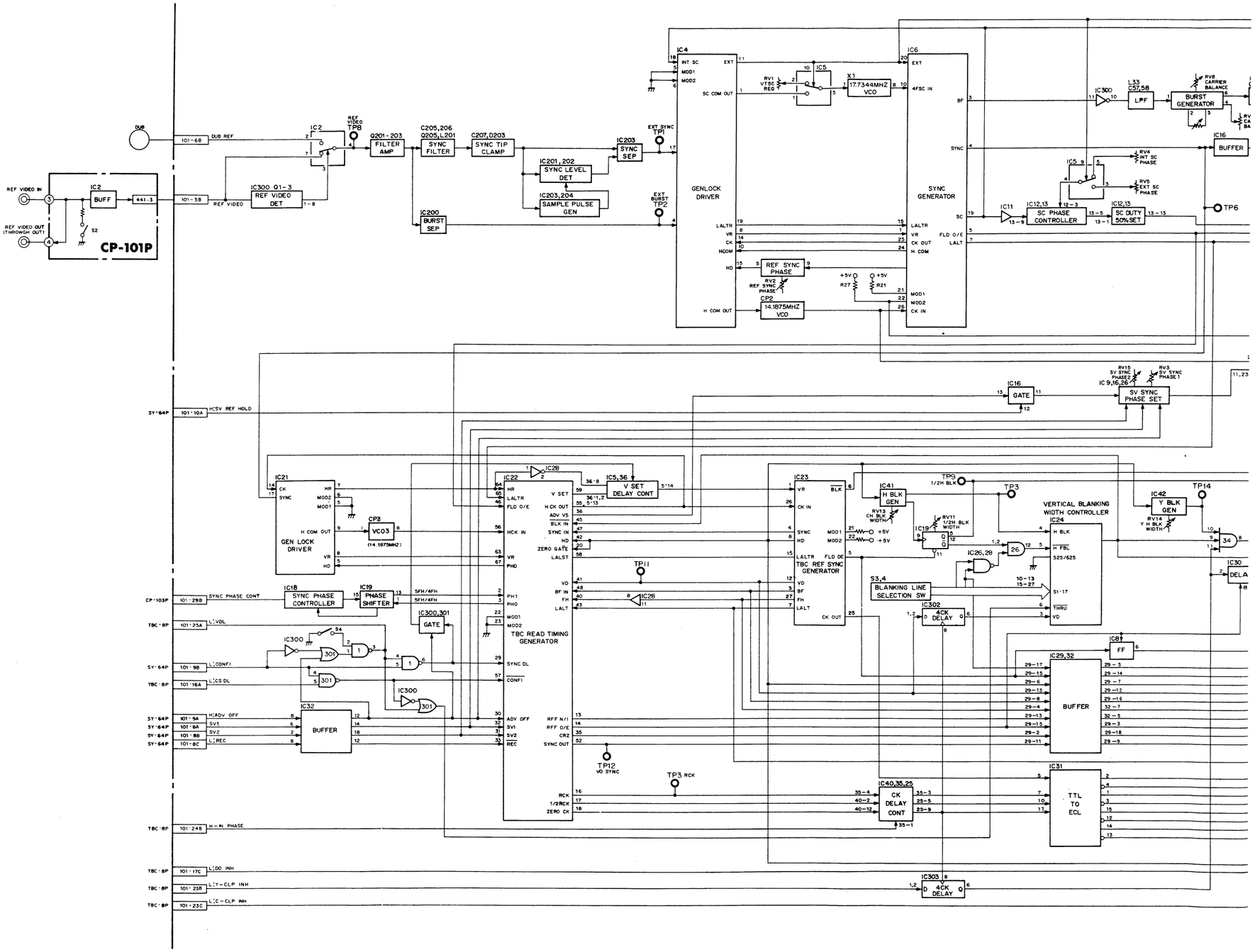

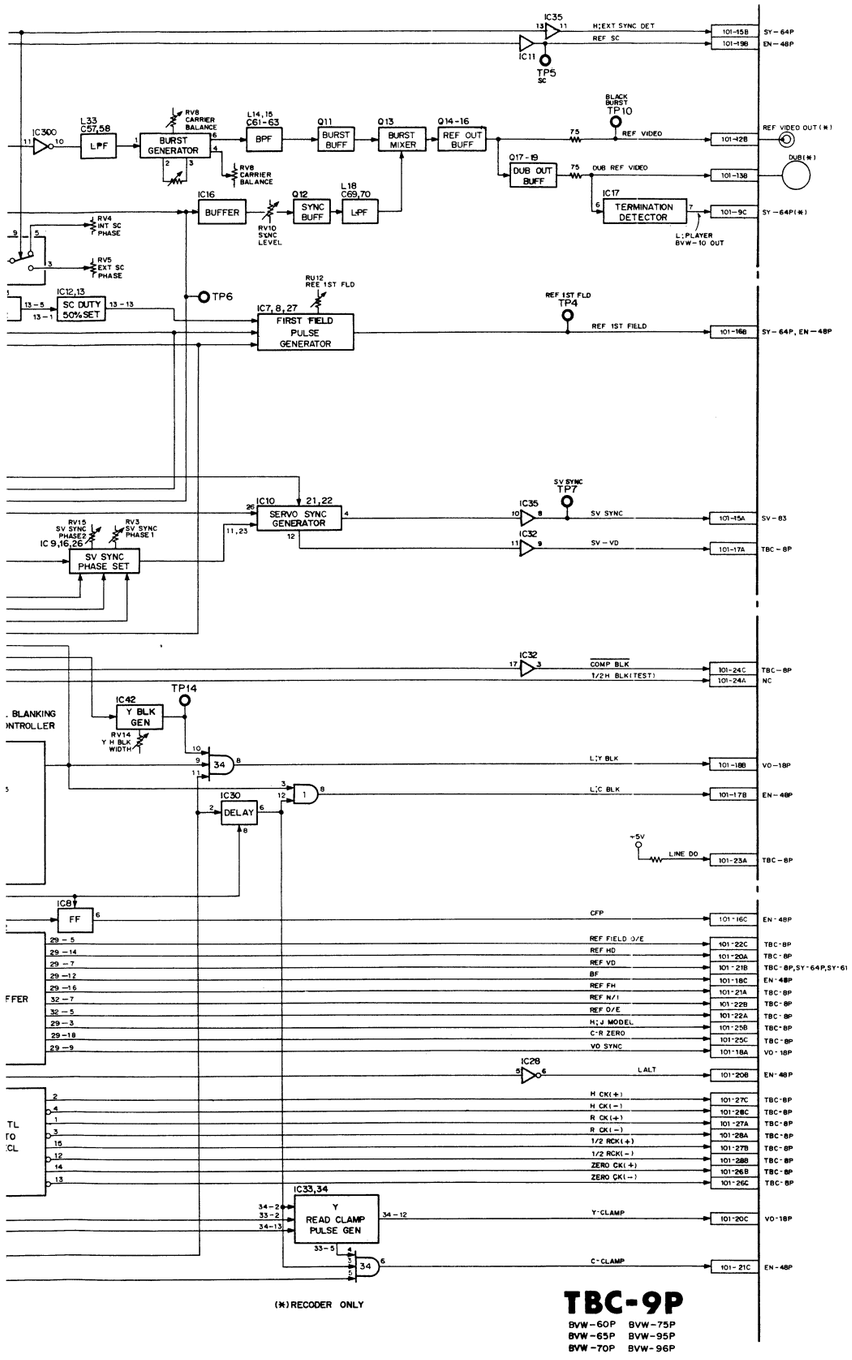


**TBC-9P**

BVW-60P BVW-75P
BVW-65P BVW-95P
BVW-70P BVW-96P

**ENCODER** S/N 10001 through 10060

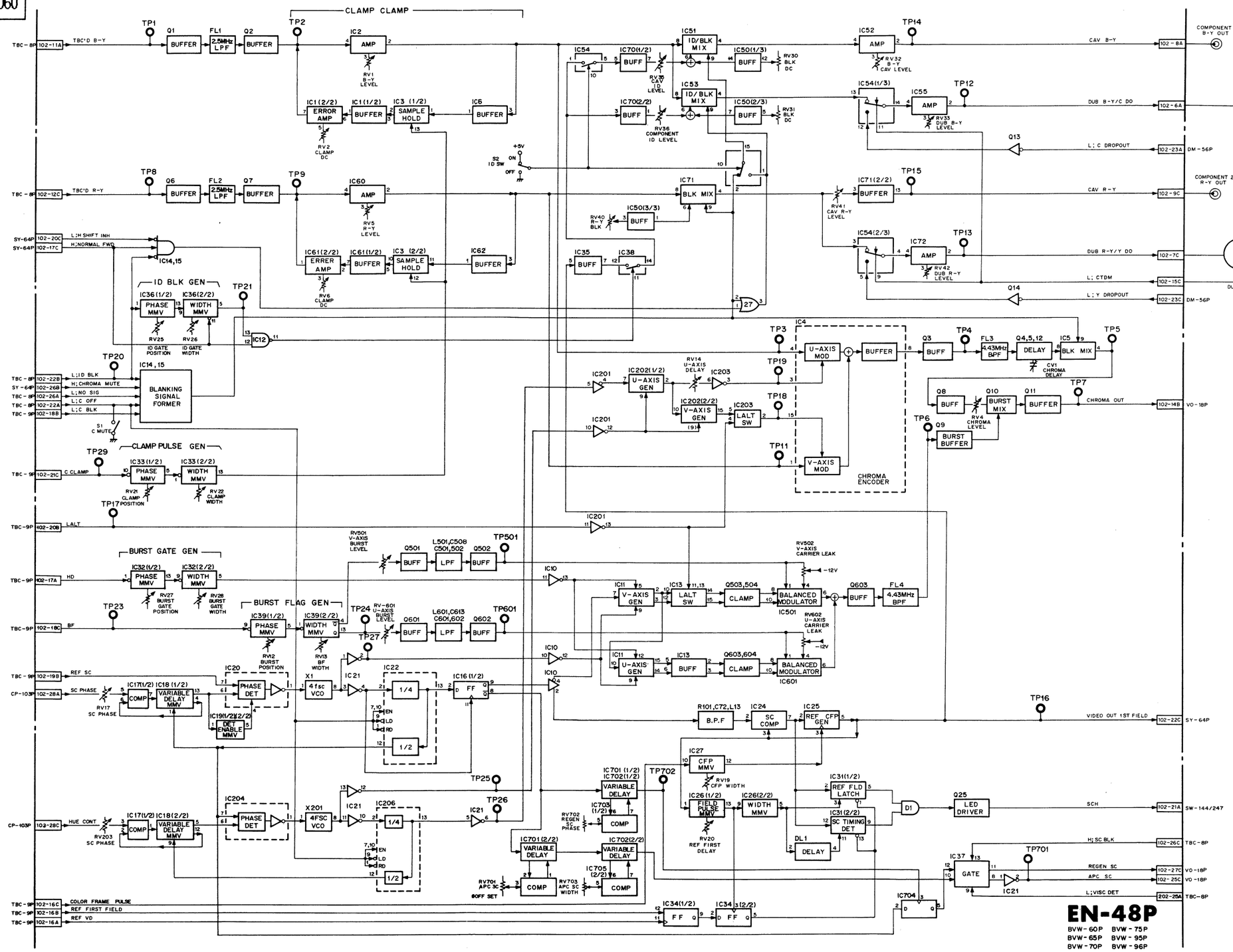


15-25(a)

15-26(a)

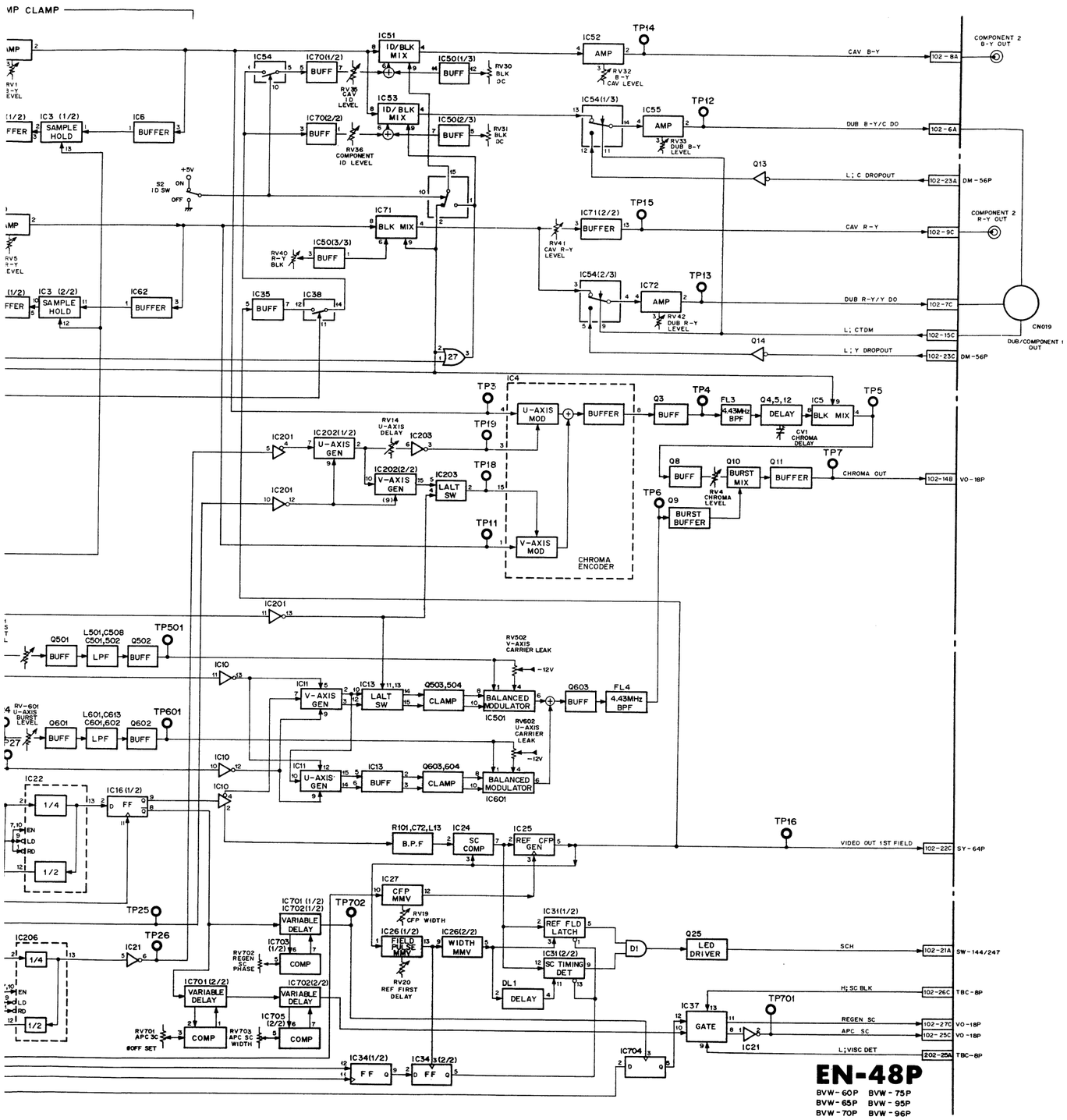


**EN-48P**

BVW-60P BVW-75P
BVW-65P BVW-95P
BVW-70P BVW-96P

# VIDEO OUTPUT AGC FOR AFM

S/N 10001 through 10060

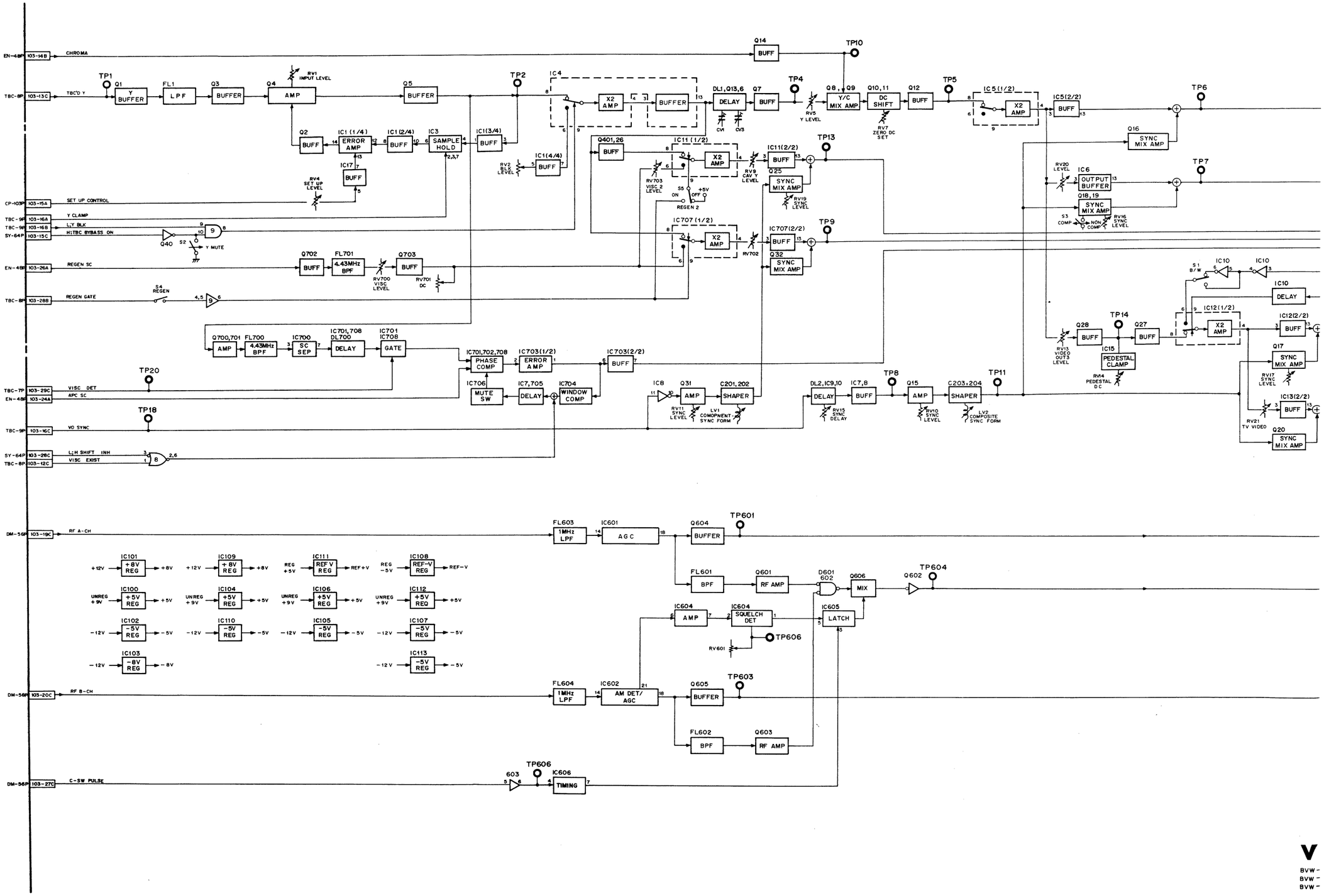


15-28(a)

15-29(a)

BVW-
BVW-
BVW-

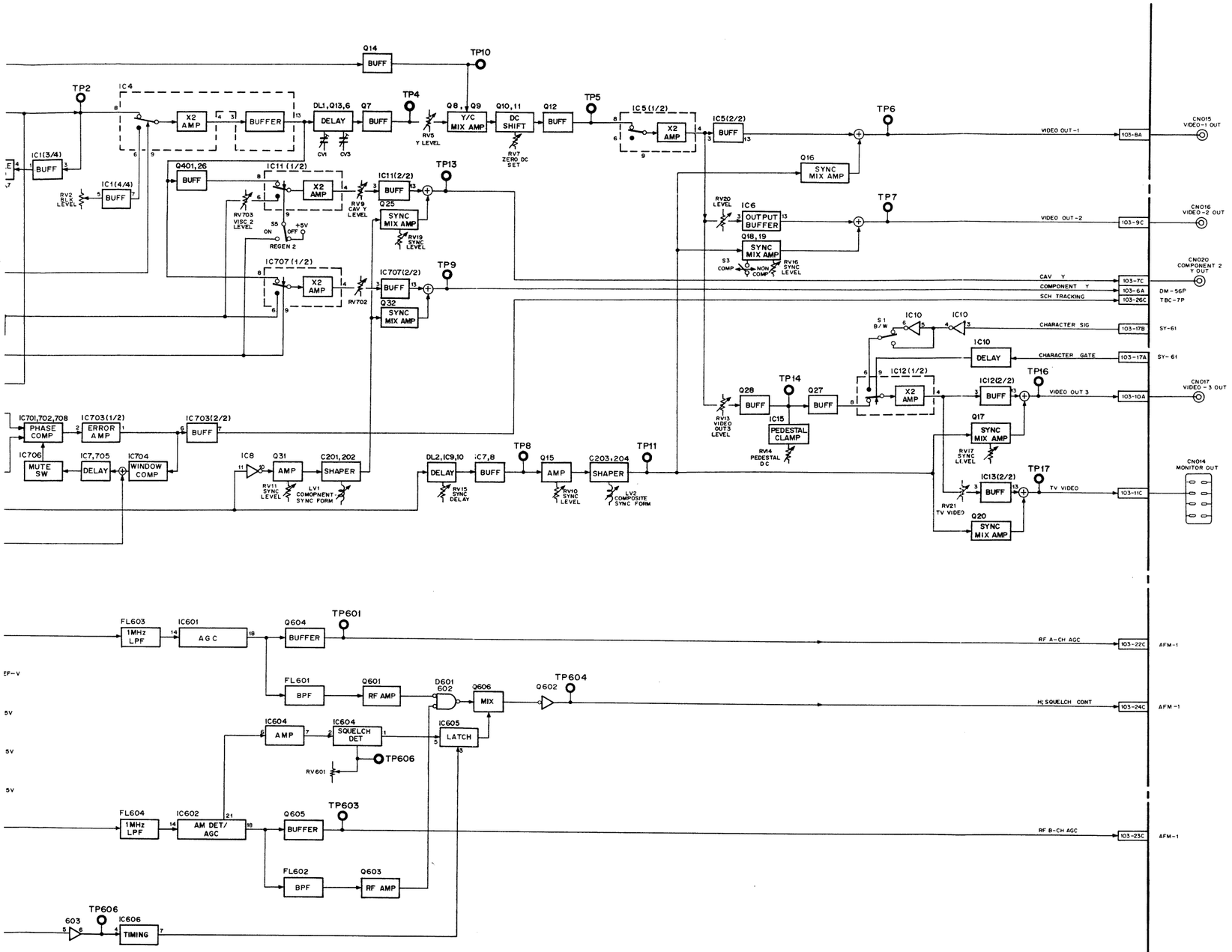





**VO-18AP**

BVW-60P
BVW-65P
BVW-95P

# ENCODER

S/N 10061 and higher



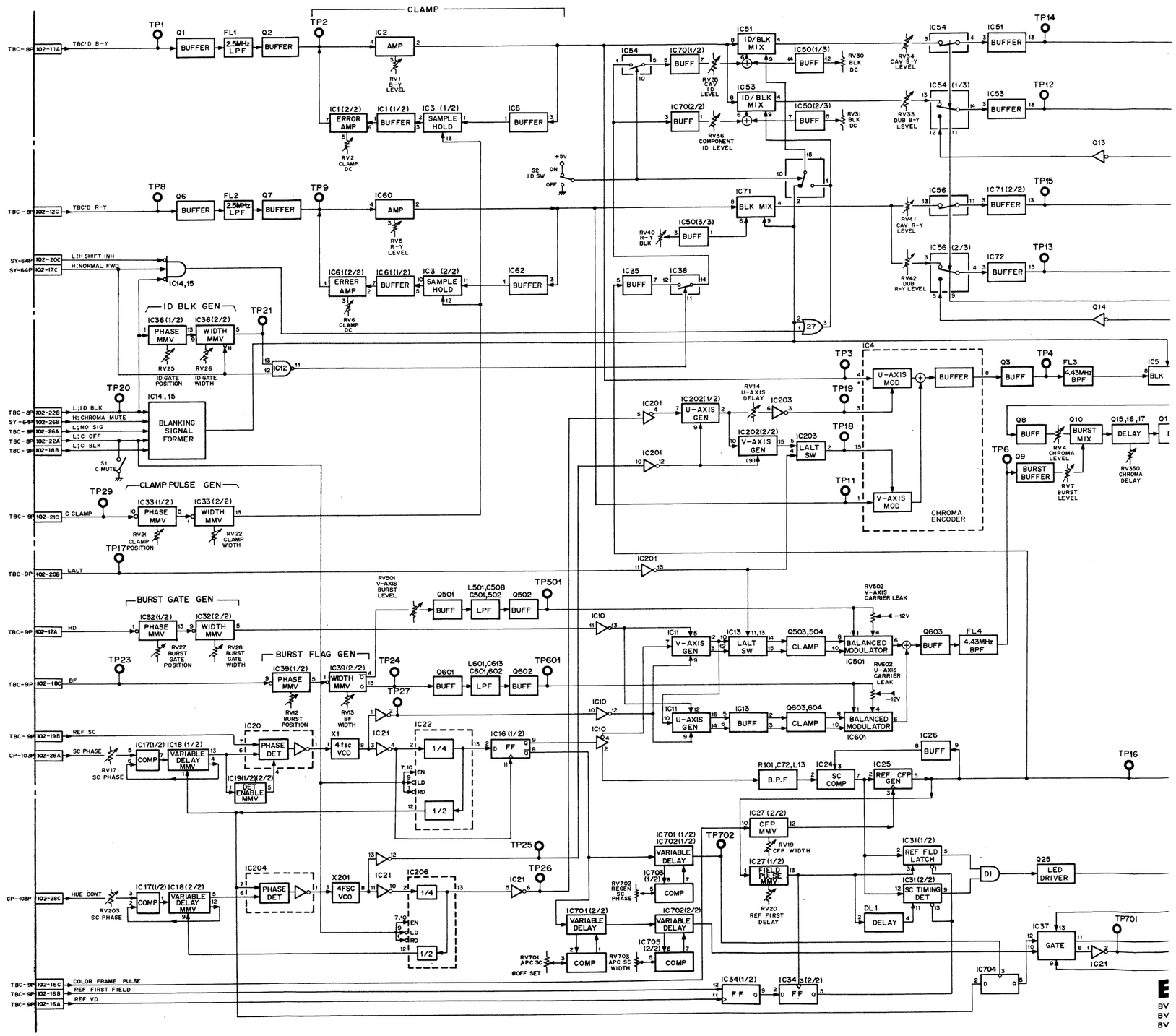

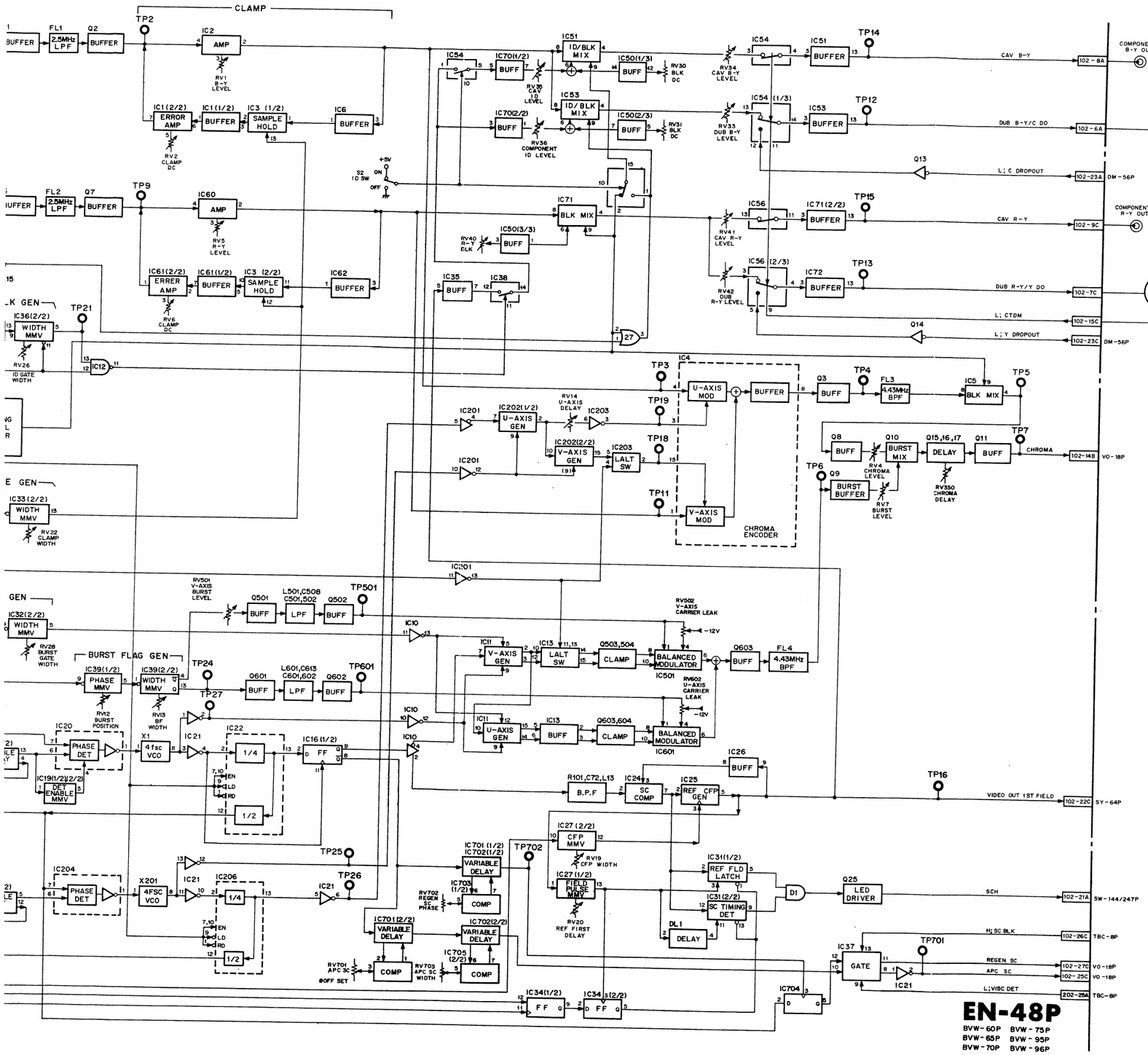
CLAMP
BUFFER
FL1 2.5MHz LPF
Q2
IC2 AMP
RV1 B-Y LEVEL
IC1(2/2) ERROR AMP
IC1(1/2) BUFFER
IC3 (1/2) SAMPLE HOLD
IC6 BUFFER
RV2 CLAMP DC
FL2 2.5MHz LPF
Q7
IC60 AMP
RV5 R-Y LEVEL
IC61(2/2) ERRER AMP
IC61(1/2) BUFFER
IC3 (2/2) SAMPLE HOLD
IC62 BUFFER
RV6 CLAMP DC
S2 ID SW
+5V
ON
OFF
IC36(2/2) WIDTH MMV
RV26 ID GATE WIDTH
IC12
IC33(2/2) WIDTH MMV
RV22 CLAMP WIDTH
IC32(2/2) WIDTH MMV
RV28 BURST GATE WIDTH
BURST FLAG GEN
IC39(1/2) PHASE MMV
IC39(2/2) WIDTH MMV
RV12 BURST POSITION
RV13 BF WIDTH
IC20 PHASE DET
IC19(1/2)(2/2) DET ENABLE MMV
X1 4fsc VCO
IC21
IC22 1/4
1/2
IC16(1/2) FF
EN
LD
RD
IC204 PHASE DET
X201 4FSC VCO
IC206 1/4
IC51 ID/BLK MIX
IC50(1/3) BUFF
RV30 BLK DC
IC70(1/2) BUFF
RV35 CAV ID LEVEL
IC53 ID/BLK MIX
IC50(2/3) BUFF
RV31 BLK DC
IC70(2/2) BUFF
RV36 COMPONENT ID LEVEL
IC71 BLK MIX
IC50(3/3) BUFF
RV40 R-Y BLK
IC35 BUFF
IC38
27
IC54
RV34 CAV B-Y LEVEL
IC51 BUFFER
TP14
CAV B-Y
102-8A
COMPONENT 2 B-Y OUT
IC54 (1/3)
RV33 DUB B-Y LEVEL
IC53 BUFFER
TP12
DUB B-Y/C DO
102-6A
Q13
L; C DROPOUT
102-23A DM-56P
IC56
RV41 CAV R-Y LEVEL
IC71(2/2) BUFFER
TP15
CAV R-Y
102-9C
COMPONENT 2 R-Y OUT
IC56 (2/3)
RV42 DUB R-Y LEVEL
IC72 BUFFER
TP13
DUB R-Y/Y DO
102-7C
L; CTDM
102-15C
CN019
DUB/COMPONENT 1 OUT
Q14
L; Y DROPOUT
102-23C DM-56P
TP21
TP3
TP19
TP18
TP11
IC4
U-AXIS MOD
BUFFER
V-AXIS MOD
CHROMA ENCODER
IC201
IC202(1/2) U-AXIS GEN
RV14 U-AXIS DELAY
IC203
IC202(2/2) V-AXIS GEN
(91)
LALT SW
Q3 BUFF
TP4
FL3 4.43MHz BPF
IC5
BLK MIX
TP5
TP7
Q8 BUFF
Q10 BURST MIX
RV4 CHROMA LEVEL
Q15,16,17 DELAY
RV350 CHROMA DELAY
Q11 BUFF
CHROMA
102-14B VO-18P
TP6
Q9 BURST BUFFER
RV7 BURST LEVEL
IC201
RV501 V-AXIS BURST LEVEL
Q501 BUFF
L501,C508 C501,502 LPF
Q502 BUFF
TP501
IC10
IC11 V-AXIS GEN
IC13 LALT SW
Q503,504 CLAMP
RV502 V-AXIS CARRIER LEAK
-12V
BALANCED MODULATOR
IC501
Q603 BUFF
FL4 4.43MHz BPF
IC11 U-AXIS GEN
IC13 BUFF
Q603,604 CLAMP
RV502 U-AXIS CARRIER LEAK
BALANCED MODULATOR
IC601
TP24
TP27
Q601 BUFF
L601,C613 C601,602 LPF
Q602 BUFF
TP601
IC26 BUFF
TP16
R101,C72,L13 B.P.F
IC24 SC COMP
IC25 REF CFP GEN
VIDEO OUT 1ST FIELD
102-22C SY-64P
IC27(2/2) CFP MMV
RV19 CFP WIDTH
TP25
TP26
TP702
IC701(1/2) IC702(1/2) VARIABLE DELAY
IC703 (1/2)
RV702 REGEN SC PHASE
COMP
IC701(2/2) VARIABLE DELAY
IC702(2/2) VARIABLE DELAY
IC705 (2/2)
RV701 APC SC
RV703 APC SC WIDTH
IC27(1/2) FIELD PULSE MMV
RV20 REF FIRST DELAY
IC31(1/2) REF FLD LATCH
IC31(2/2) SC TIMING DET
DL1 DELAY
D1
Q25 LED DRIVER
SCH
102-21A SW-144/247P
H; SC BLK
102-26C TBC-8P
IC37 GATE
TP701
REGEN SC
APC SC
L; VISC DET
102-27C VO-18P
102-25C VO-18P
202-28A TBC-8P
IC21
IC704
IC34(1/2) FF
IC34(2/2) FF
EN-48P
BVW-60P BVW-75P
BVW-65P BVW-95P
BVW-70P BVW-96P

# VIDEO OUTPUT
# AGC FOR AFM

S/N 10061 and higher



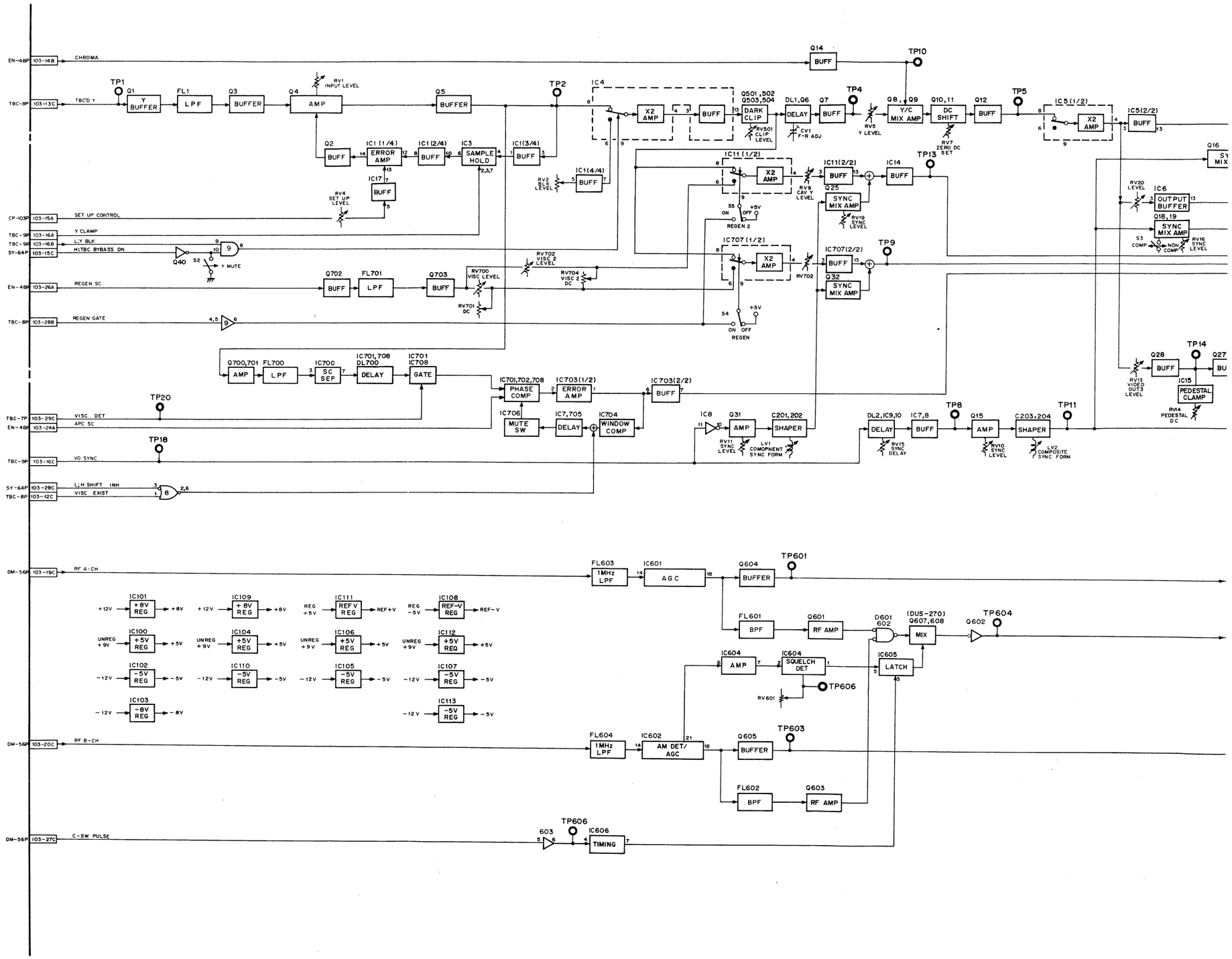

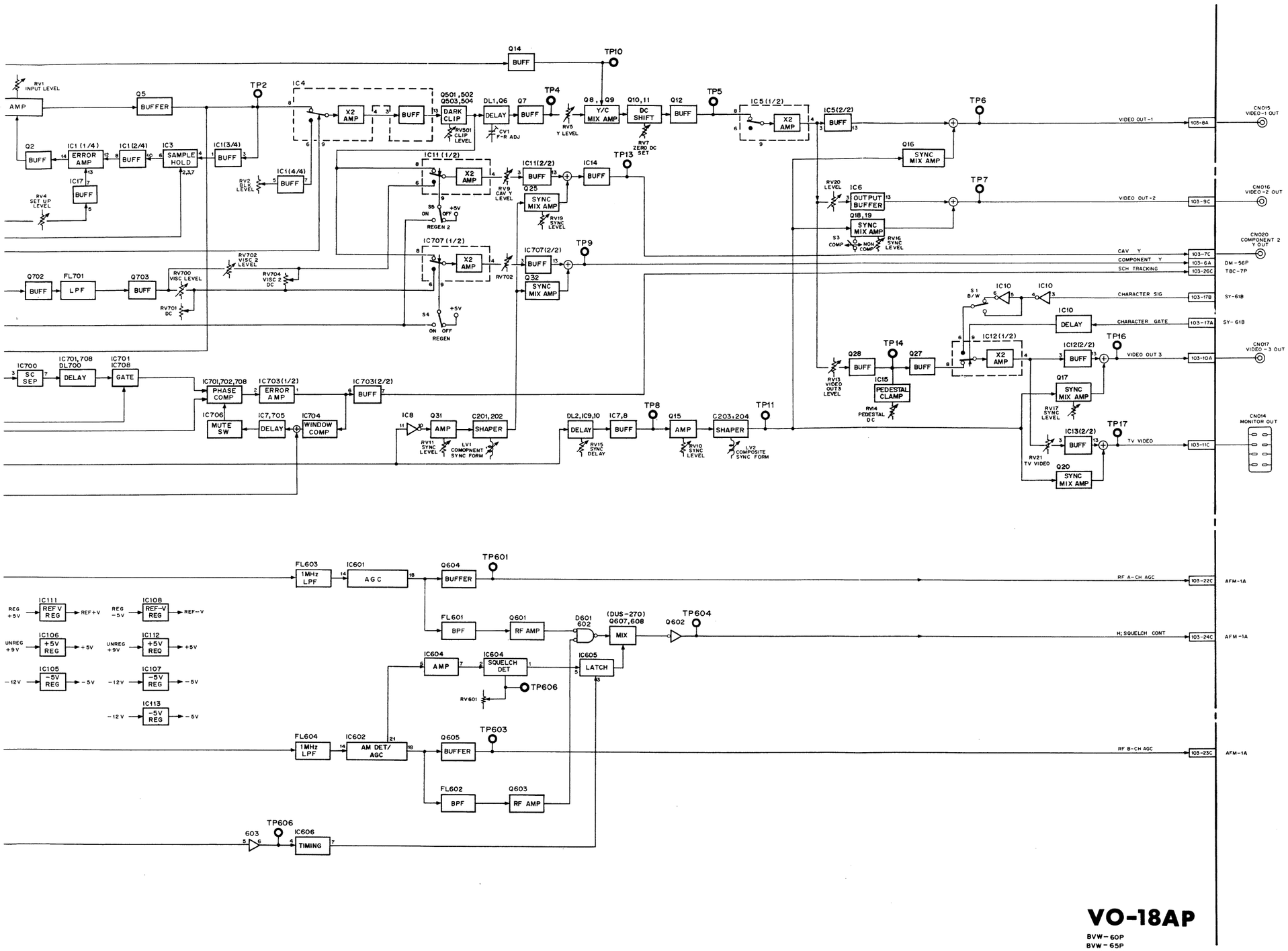





**VO-18AP**

BVW-60P
BVW-65P
BVW-95P

# LNG AUDIO

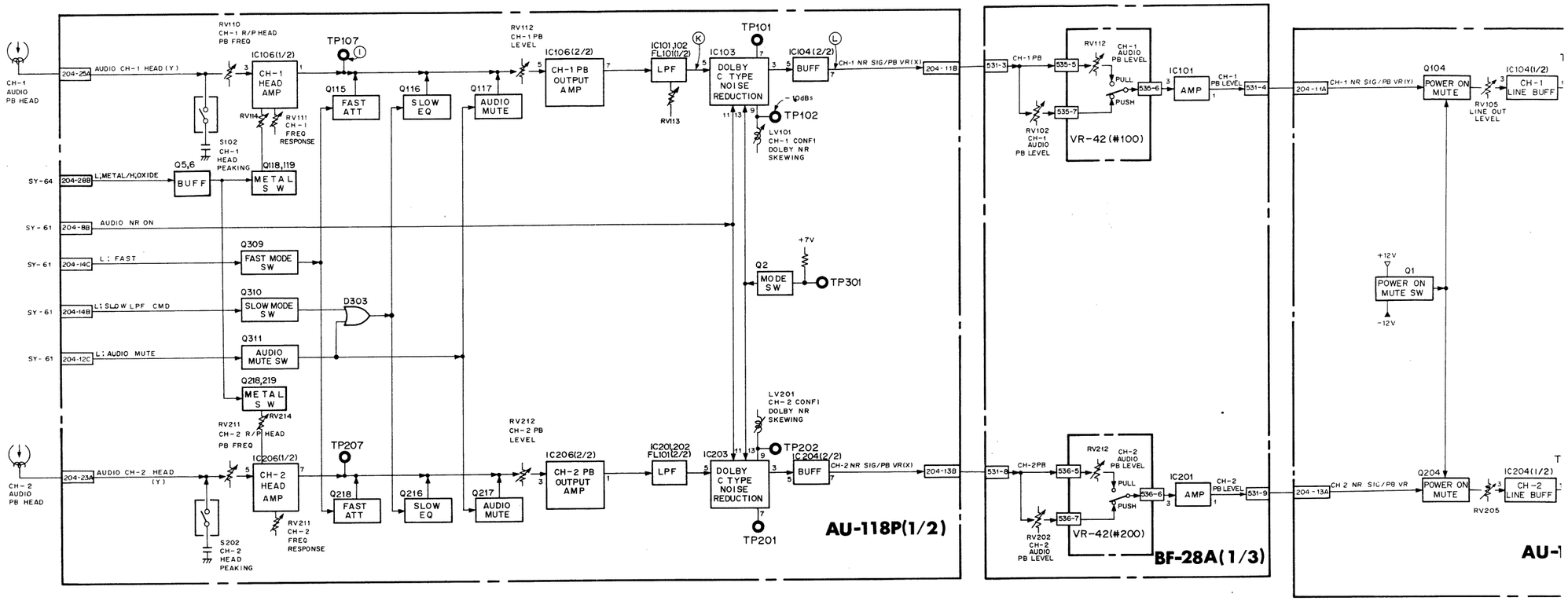
CH-1 AUDIO PB HEAD
204-25A
AUDIO CH-1 HEAD (Y)
RV110 CH-1 R/P HEAD PB FREQ
IC106(1/2)
CH-1 HEAD AMP
TP107
Q115 FAST ATT
Q116 SLOW EQ
Q117 AUDIO MUTE
RV112 CH-1 PB LEVEL
IC106(2/2)
CH-1 PB OUTPUT AMP
IC101,102 FL101(1/2)
LPF
RV113
IC103
DOLBY C TYPE NOISE REDUCTION
TP101
IC104(2/2)
BUFF
CH-1 NR SIG/PB VR(X)
204-11B
RV114
RV111 CH-1 FREQ RESPONSE
S102 CH-1 HEAD PEAKING
SY-64
204-28B
L;METAL/H;OXIDE
Q5,6 BUFF
Q118,119 METAL S W
SY-61
204-8B
AUDIO NR ON
204-14C
L : FAST
Q309 FAST MODE SW
204-14B
L; SLOW LPF CMD
Q310 SLOW MODE SW
D303
204-12C
L : AUDIO MUTE
Q311 AUDIO MUTE SW
Q218,219 METAL S W
RV214
RV211 CH-2 R/P HEAD PB FREQ
CH-2 AUDIO PB HEAD
204-23A
AUDIO CH-2 HEAD (Y)
IC206(1/2)
CH-2 HEAD AMP
TP207
Q218 FAST ATT
Q216 SLOW EQ
Q217 AUDIO MUTE
RV212 CH-2 PB LEVEL
IC206(2/2)
CH-2 PB OUTPUT AMP
IC201,202 FL101(2/2)
LPF
IC203
DOLBY C TYPE NOISE REDUCTION
TP202
IC204(2/2)
BUFF
CH-2 NR SIG/PB VR(X)
204-13B
RV211 CH-2 FREQ RESPONSE
S202 CH-2 HEAD PEAKING
TP201
LV101 CH-1 CONF1 DOLBY NR SKEWING
LV201 CH-2 CONF1 DOLBY NR SKEWING
TP102
-10dBs
Q2 MODE SW
+7V
TP301
AU-118P(1/2)
531-3
CH-1PB
RV102 CH-1 AUDIO PB LEVEL
535-5
535-7
RV112 CH-1 AUDIO PB LEVEL
PULL
PUSH
536-6
VR-42 (#100)
IC101 AMP
CH-1 PB LEVEL
531-4
531-8
CH-2PB
RV202 CH-2 AUDIO PB LEVEL
RV212 CH-2 AUDIO PB LEVEL
IC201 AMP
CH-2 PB LEVEL
531-9
VR-42(#200)
BF-28A(1/3)
204-11A
CH-1 NR SIG/PB VR(Y)
Q104 POWER ON MUTE
IC104(1/2) CH-1 LINE BUFF
RV105 LINE OUT LEVEL
204-13A
CH-2 NR SIG/PB VR
Q204 POWER ON MUTE
IC204(1/2) CH-2 LINE BUFF
RV205
+12V
Q1 POWER ON MUTE SW
-12V
AU-1

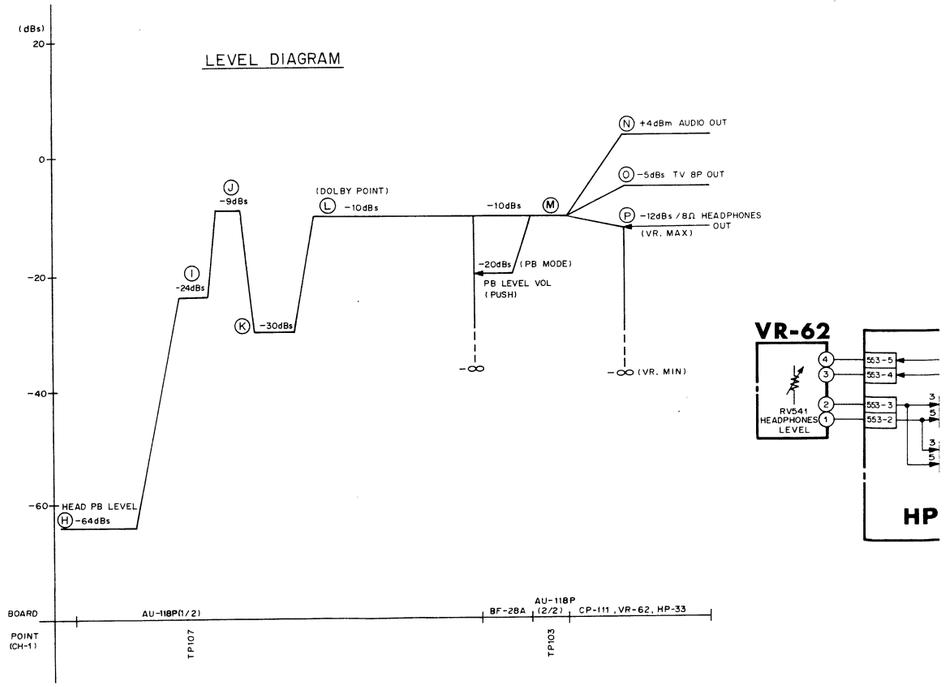
LEVEL DIAGRAM
(dBs)
20
0
-20
-40
-60
(H) HEAD PB LEVEL -64dBs
(I) -24dBs
(J) -9dBs
(K) -30dBs
(DOLBY POINT)
(L) -10dBs
-10dBs
(M)
(N) +4dBm AUDIO OUT
(O) -5dBs TV BP OUT
(P) -12dBs / 8Ω HEADPHONES OUT (VR. MAX)
-20dBs (PB MODE)
PB LEVEL VOL (PUSH)
-∞ (VR. MIN)
BOARD
POINT (CH-1)
AU-118P(1/2)
TP107
BF-28A
AU-118P (2/2)
TP103
CP-111, VR-62, HP-33
VR-62
RV541 HEADPHONES LEVEL
553-5
553-4
553-3
553-2
HP

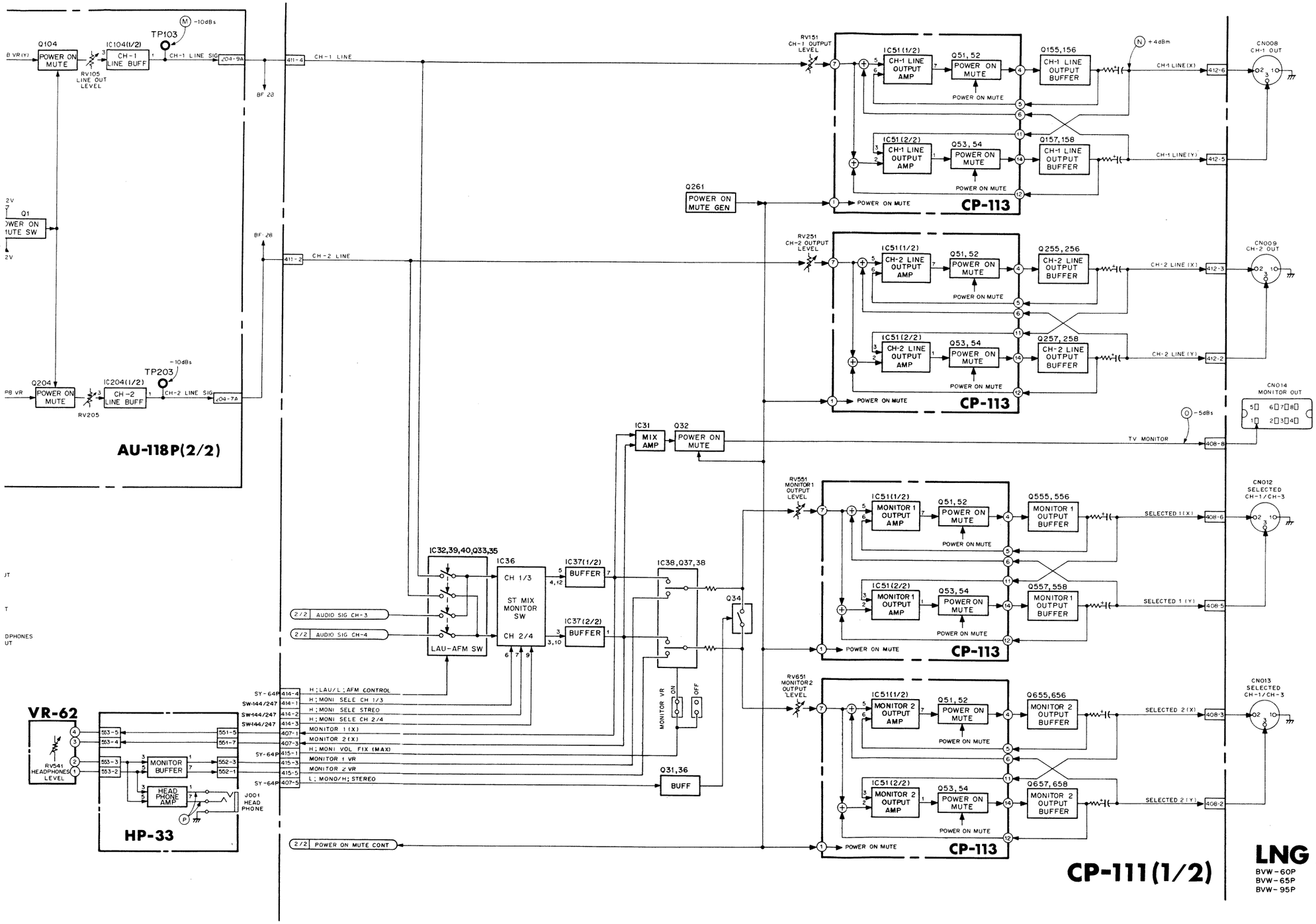


CP-111(1/2)

**LNG AUDIO**
BVW-60P
BVW-65P
BVW-95P

# AFM AUDIO

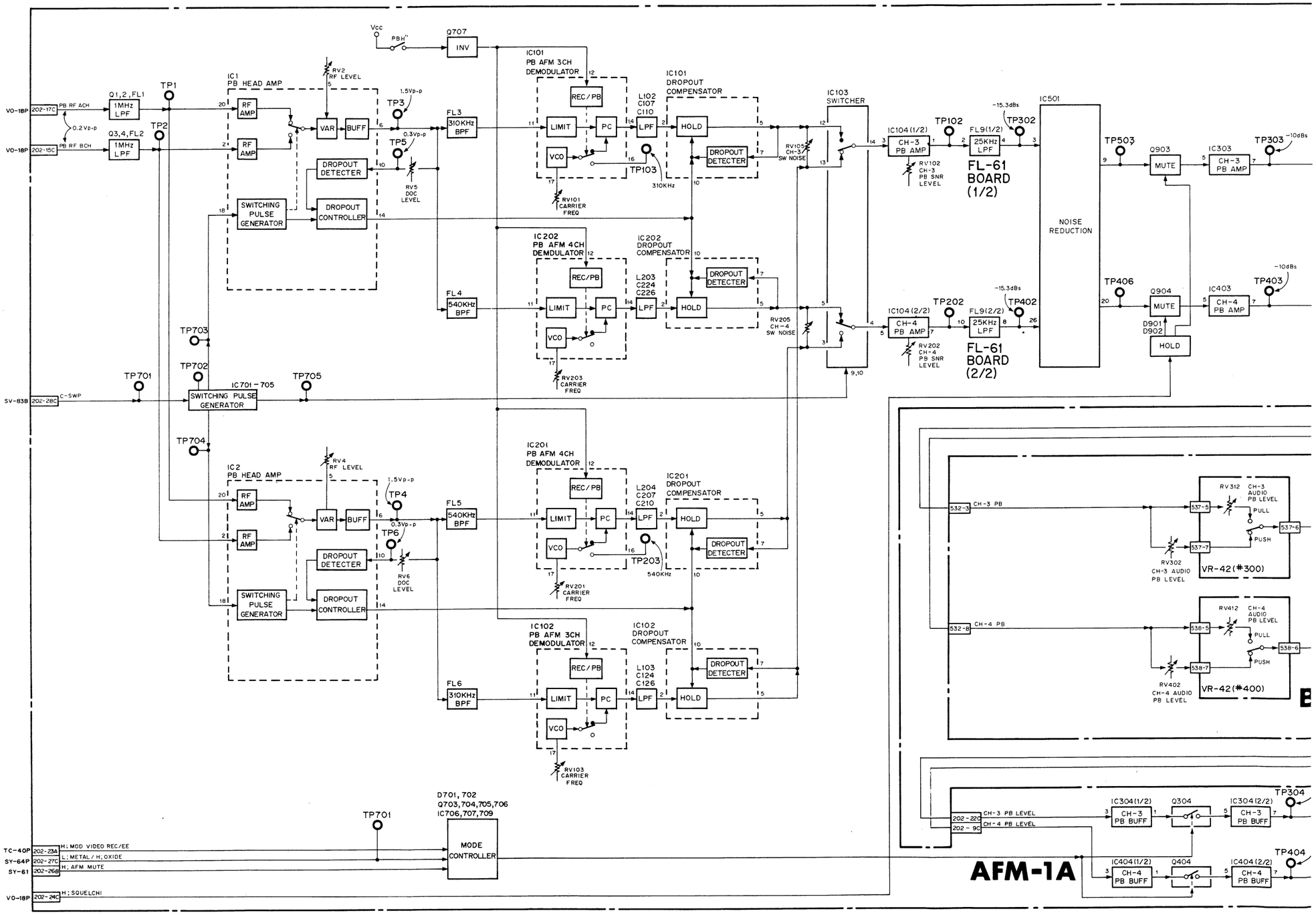
Vcc
PBH"
Q707
INV
IC101
PB AFM 3CH
DEMODULATOR
REC/PB
LIMIT
PC
VCO
RV101
CARRIER
FREQ
IC101
DROPOUT
COMPENSATOR
LPF
HOLD
DROPOUT
DETECTER
L102
C107
C110
TP103
310KHz
IC103
SWITCHER
RV105
CH-3
SW NOISE
IC104(1/2)
CH-3
PB AMP
RV102
CH-3
PB SNR
LEVEL
TP102
FL9(1/2)
25KHz
LPF
-15.3dBs
TP302
FL-61
BOARD
(1/2)
IC501
NOISE
REDUCTION
TP503
Q903
MUTE
IC303
CH-3
PB AMP
TP303
-10dBs
IC202
PB AFM 4CH
DEMODULATOR
IC202
DROPOUT
COMPENSATOR
L203
C224
C226
RV205
CH-4
SW NOISE
IC104(2/2)
CH-4
PB AMP
RV202
CH-4
PB SNR
LEVEL
TP202
FL9(2/2)
TP402
FL-61
BOARD
(2/2)
TP406
Q904
D901
D902
IC403
CH-4
PB AMP
TP403
IC1
PB HEAD AMP
RV2
RF LEVEL
RF
AMP
VAR
BUFF
TP1
TP2
TP3
TP5
1.5Vp-p
0.3Vp-p
0.2Vp-p
Q1,2,FL1
1MHz
LPF
Q3,4,FL2
PB RF ACH
PB RF BCH
VO-18P
202-17C
202-15C
DROPOUT
DETECTER
SWITCHING
PULSE
GENERATOR
DROPOUT
CONTROLLER
RV5
DOC
LEVEL
FL3
310KHz
BPF
FL4
540KHz
BPF
TP703
TP702
TP701
TP705
IC701-705
SWITCHING PULSE
GENERATOR
C-SWP
SV-83B
202-28C
TP704
IC2
PB HEAD AMP
RV4
RF LEVEL
TP4
TP6
RV6
DOC
LEVEL
FL5
540KHz
BPF
IC201
PB AFM 4CH
DEMODULATOR
IC201
DROPOUT
COMPENSATOR
L204
C207
C210
TP203
540KHz
RV201
CARRIER
FREQ
IC102
PB AFM 3CH
DEMODULATOR
IC102
DROPOUT
COMPENSATOR
L103
C124
C126
FL6
310KHz
BPF
RV103
CARRIER
FREQ
TP701
D701,702
Q703,704,705,706
IC706,707,709
MODE
CONTROLLER
TC-40P
SY-64P
SY-61
VO-18P
202-23A
202-27C
202-26B
202-24C
H; MOD VIDEO REC/EE
L; METAL / H; OXIDE
H; AFM MUTE
H; SQUELCH
CH-3 PB
CH-4 PB
532-3
532-8
RV312
CH-3
AUDIO
PB LEVEL
RV302
CH-3 AUDIO
PB LEVEL
VR-42(#300)
RV412
CH-4
AUDIO
PB LEVEL
RV402
CH-4 AUDIO
PB LEVEL
VR-42(#400)
PULL
PUSH
537-5
537-6
537-7
538-5
538-6
538-7
CH-3 PB LEVEL
CH-4 PB LEVEL
202-22C
202-9C
IC304(1/2)
CH-3
PB BUFF
Q304
IC304(2/2)
TP304
IC404(1/2)
CH-4
PB BUFF
Q404
IC404(2/2)
TP404
AFM-1A

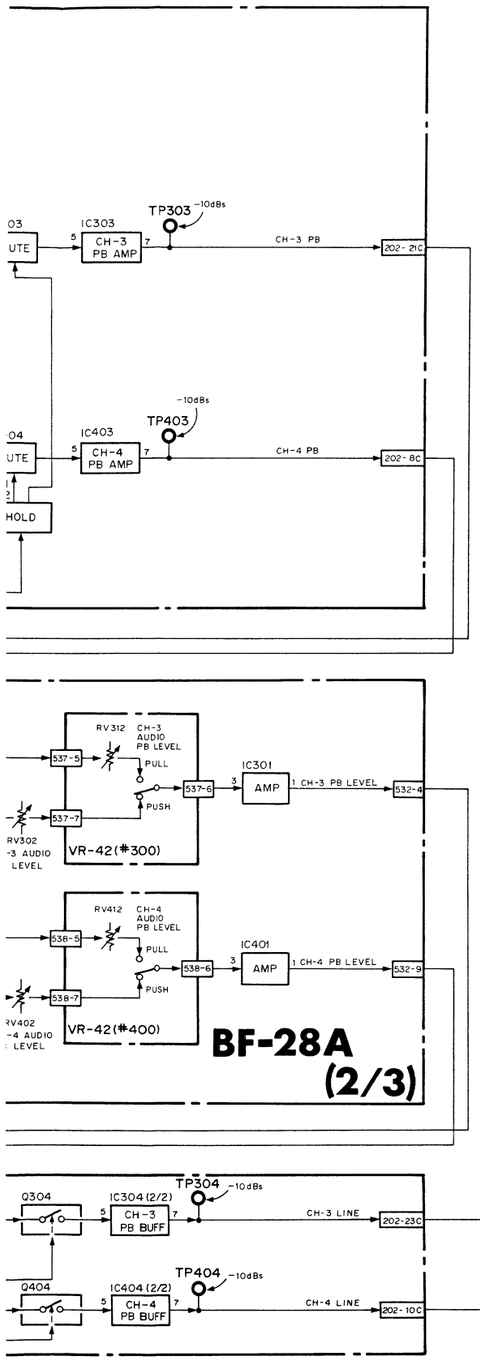


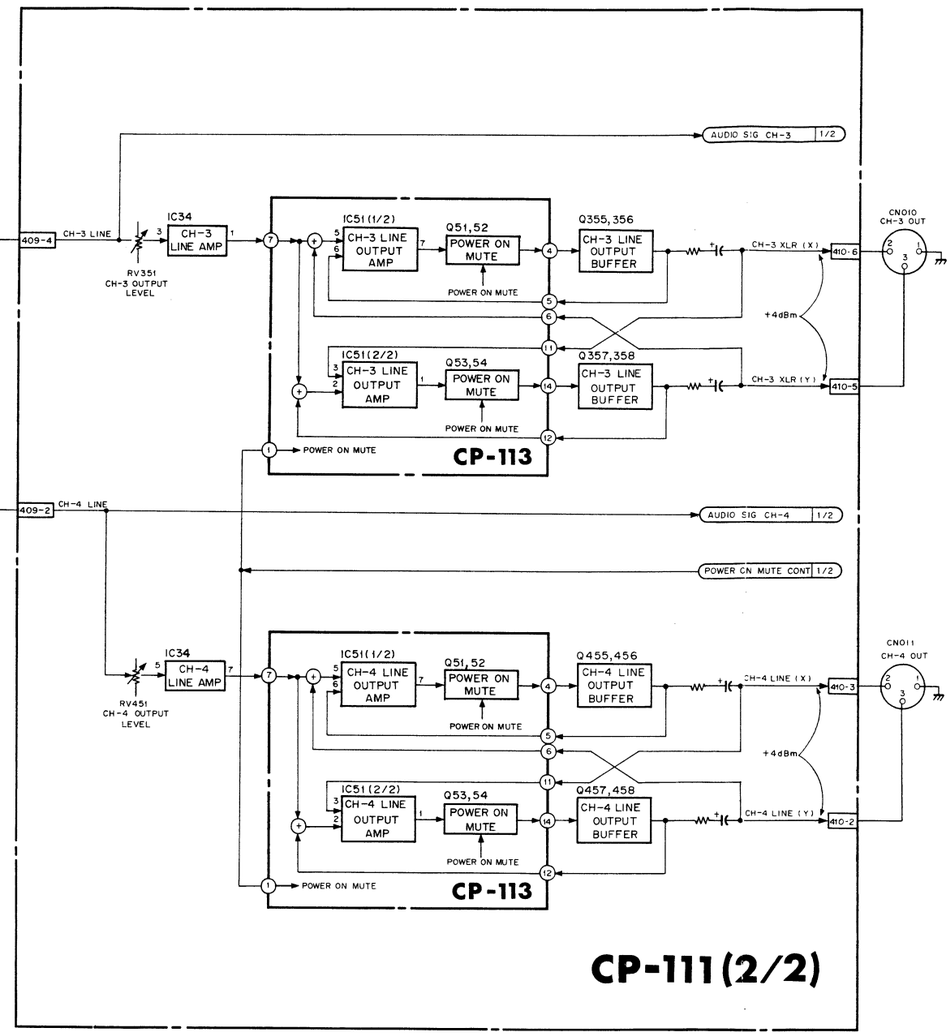


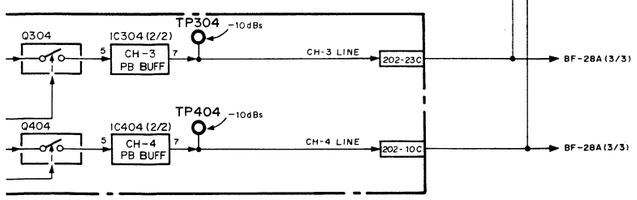


# AFM AUDIO

BVW-60P
BVW-65P
BVW-95P

# AUDIO METER

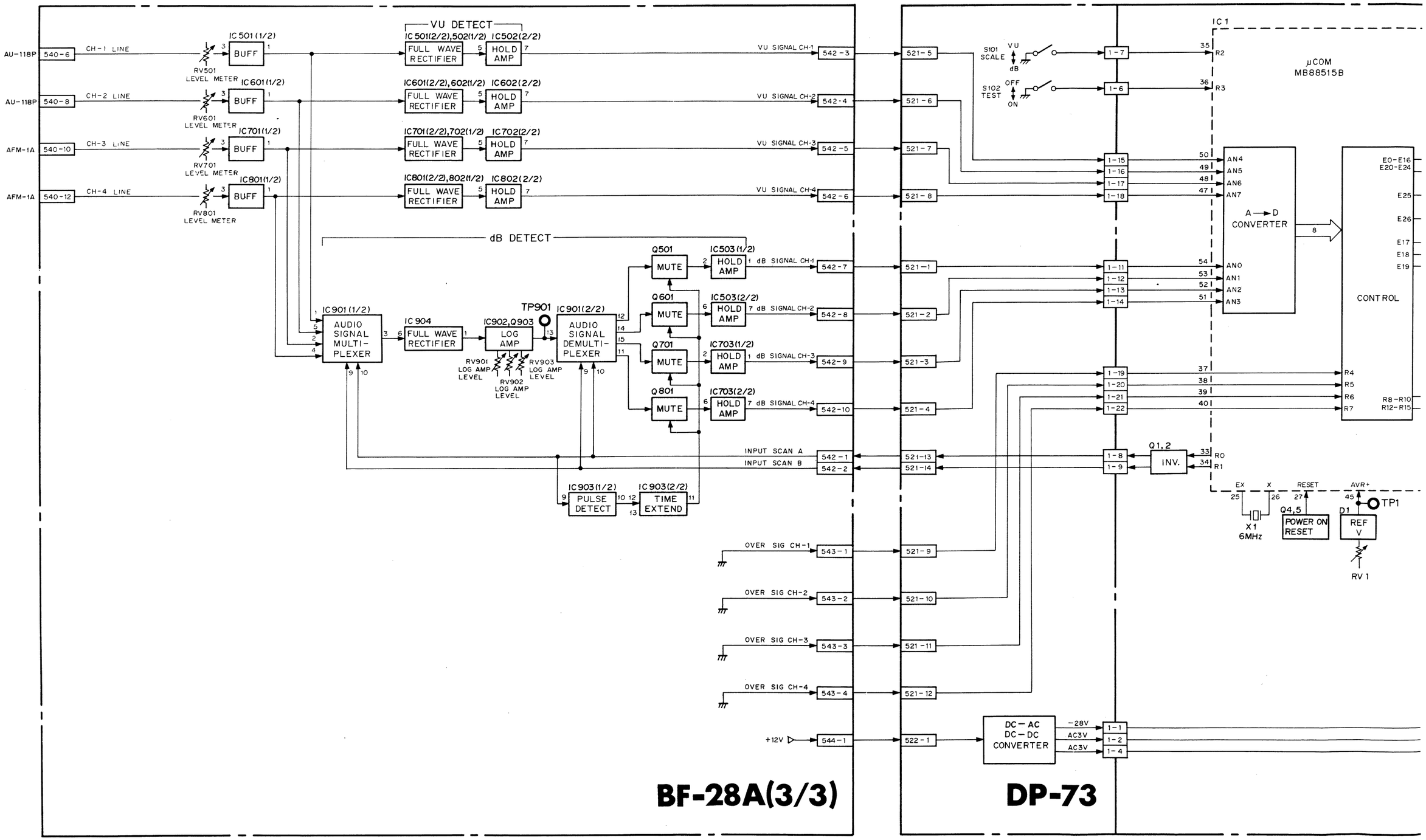
AU-118P
540-6
CH-1 LINE
IC501(1/2)
BUFF
RV501 LEVEL METER
AU-118P
540-8
CH-2 LINE
IC601(1/2)
BUFF
RV601 LEVEL METER
AFM-1A
540-10
CH-3 LINE
IC701(1/2)
BUFF
RV701 LEVEL METER
AFM-1A
540-12
CH-4 LINE
IC801(1/2)
BUFF
RV801 LEVEL METER
VU DETECT
IC501(2/2),502(1/2)
FULL WAVE RECTIFIER
IC502(2/2)
HOLD AMP
IC601(2/2),602(1/2)
FULL WAVE RECTIFIER
IC602(2/2)
HOLD AMP
IC701(2/2),702(1/2)
FULL WAVE RECTIFIER
IC702(2/2)
HOLD AMP
IC801(2/2),802(1/2)
FULL WAVE RECTIFIER
IC802(2/2)
HOLD AMP
VU SIGNAL CH-1
542-3
VU SIGNAL CH-2
542-4
VU SIGNAL CH-3
542-5
VU SIGNAL CH-4
542-6
dB DETECT
IC901(1/2)
AUDIO SIGNAL MULTI-PLEXER
IC904
FULL WAVE RECTIFIER
IC902,Q903
LOG AMP
TP901
IC901(2/2)
AUDIO SIGNAL DEMULTI-PLEXER
RV901 LOG AMP LEVEL
RV902 LOG AMP LEVEL
RV903 LOG AMP LEVEL
Q501
MUTE
IC503(1/2)
HOLD AMP
dB SIGNAL CH-1
542-7
Q601
MUTE
IC503(2/2)
HOLD AMP
dB SIGNAL CH-2
542-8
Q701
MUTE
IC703(1/2)
HOLD AMP
dB SIGNAL CH-3
542-9
Q801
MUTE
IC703(2/2)
HOLD AMP
dB SIGNAL CH-4
542-10
INPUT SCAN A
542-1
INPUT SCAN B
542-2
IC903(1/2)
PULSE DETECT
IC903(2/2)
TIME EXTEND
OVER SIG CH-1
543-1
OVER SIG CH-2
543-2
OVER SIG CH-3
543-3
OVER SIG CH-4
543-4
+12V
544-1
521-5
521-6
521-7
521-8
521-1
521-2
521-3
521-4
521-13
521-14
521-9
521-10
521-11
521-12
522-1
S101 SCALE VU dB
S102 TEST OFF ON
1-7
1-6
1-15
1-16
1-17
1-18
1-11
1-12
1-13
1-14
1-19
1-20
1-21
1-22
1-8
1-9
IC 1
µCOM MB88515B
R2
R3
AN4
AN5
AN6
AN7
A→D CONVERTER
AN0
AN1
AN2
AN3
CONTROL
E0-E16
E20-E24
E25
E26
E17
E18
E19
R4
R5
R6
R7
R8-R10
R12-R15
Q1,2
INV.
R0
R1
EX
X
RESET
AVR+
X1 6MHz
Q4,5 POWER ON RESET
D1
REF V
TP1
RV 1
DC-AC DC-DC CONVERTER
-28V
AC3V
AC3V
1-1
1-2
1-4
BF-28A(3/3)
DP-73

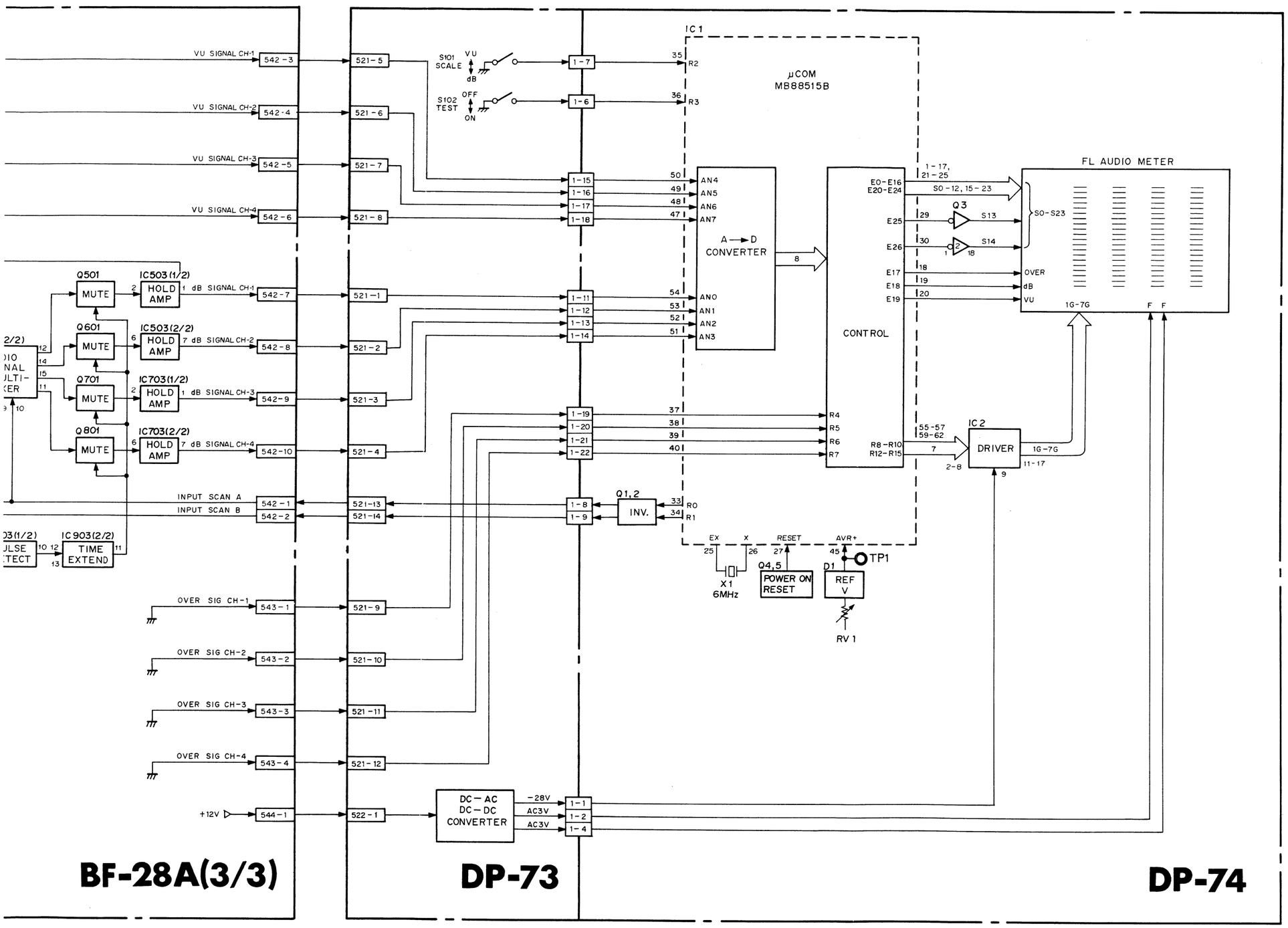


**BF-28A(3/3)** **DP-73** **DP-74**

# AUDIO METER

BVW-60P
BVW-65P
BVW-95P

µCOM SERVO µCOM SE

# MICROCOMPUTER SERVO SYSTEM

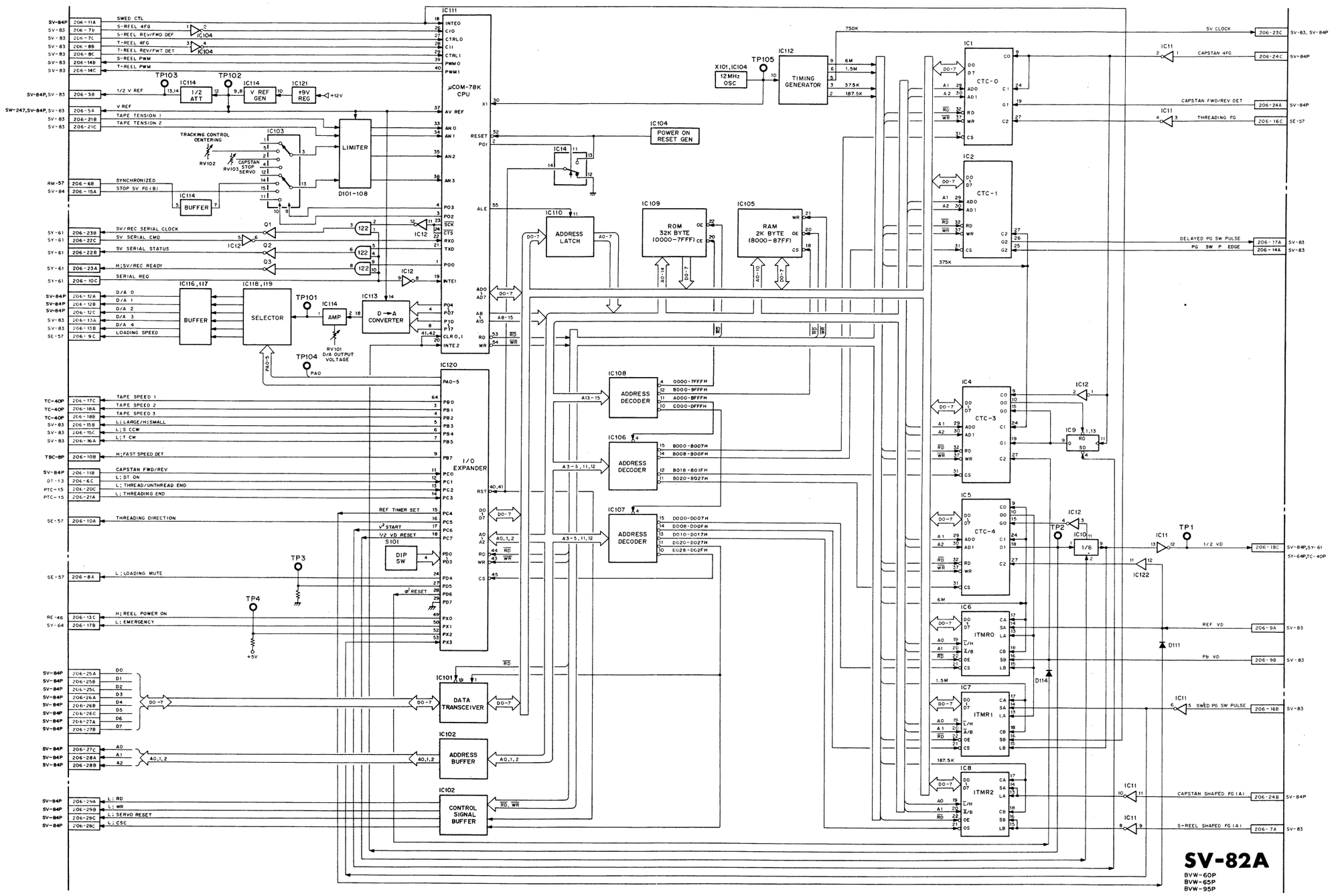

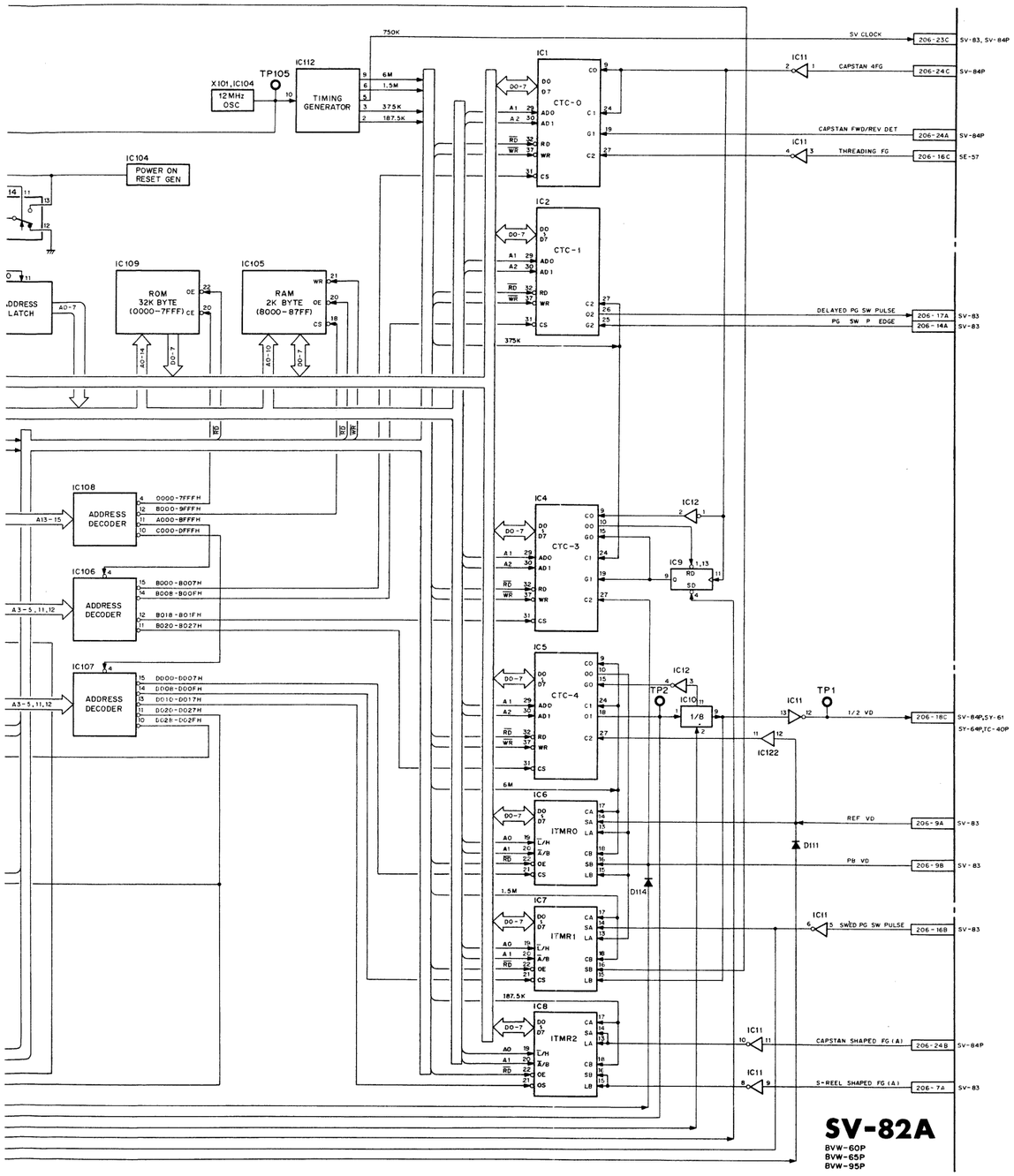
750K
SV CLOCK
206-23C
SV-83, SV-84P
IC112
TP105
X101,IC104
12MHz OSC
TIMING GENERATOR
6M
1.5M
375K
187.5K
IC1
CTC-0
IC11
CAPSTAN 4FG
206-24C
SV-84P
CAPSTAN FWD/REV DET
206-24A
SV-84P
THREADING FG
206-16C
SE-57
IC104
POWER ON RESET GEN
IC2
CTC-1
IC109
ROM 32K BYTE (0000-7FFF)
IC105
RAM 2K BYTE (8000-87FF)
DELAYED PG SW PULSE
PG SW P EDGE
206-17A
206-14A
SV-83
IC108
ADDRESS DECODER
0000-7FFFH
8000-9FFFH
A000-BFFFH
C000-DFFFH
IC106
ADDRESS DECODER
B000-B007H
B008-B00FH
B018-B01FH
B020-B027H
IC107
ADDRESS DECODER
D000-D007H
D008-D00FH
D010-D017H
D020-D027H
D028-D02FH
IC4
CTC-3
IC12
IC9
IC5
CTC-4
IC10
1/8
TP2
TP1
IC11
1/2 VD
206-18C
SV-84P,SY-61
SY-64P,TC-40P
IC122
IC6
ITMR0
REF VD
206-9A
SV-83
D111
PB VD
206-9B
D114
IC7
ITMR1
S.WED PG SW PULSE
206-16B
IC8
ITMR2
CAPSTAN SHAPED FG(A)
206-24B
S-REEL SHAPED FG(A)
206-7A
SV-82A
BVW-60P
BVW-65P
BVW-95P

# REEL SERVO

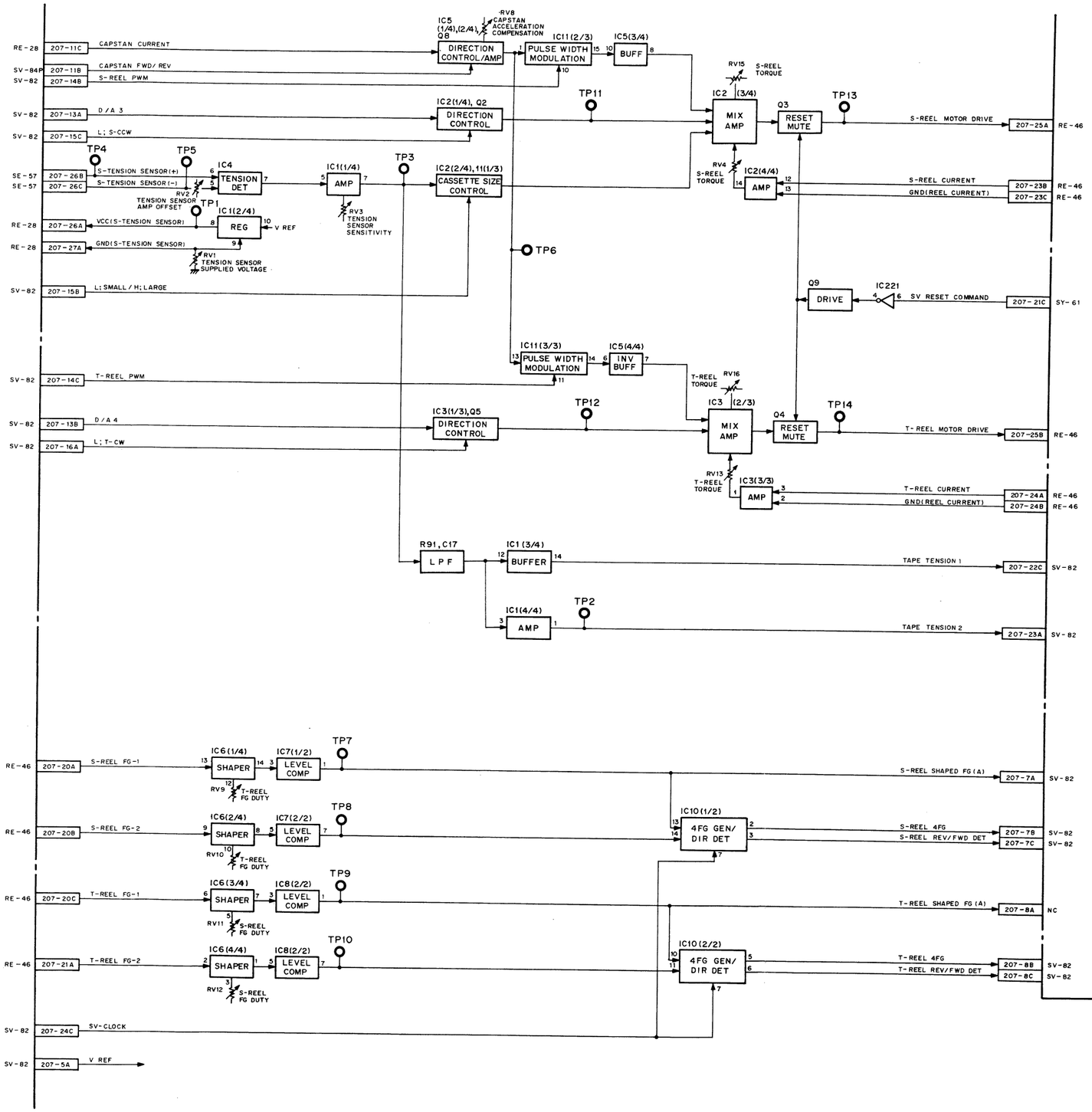
RE-28 207-11C CAPSTAN CURRENT
SV-84P 207-11B CAPSTAN FWD/REV
SV-82 207-14B S-REEL PWM
SV-82 207-13A D/A 3
SV-82 207-15C L; S-CCW
SE-57 207-26B S-TENSION SENSOR(+)
SE-57 207-26C S-TENSION SENSOR(-)
RE-28 207-26A VCC(S-TENSION SENSOR)
RE-28 207-27A GND(S-TENSION SENSOR)
SV-82 207-15B L; SMALL / H; LARGE
SV-82 207-14C T-REEL PWM
SV-82 207-13B D/A 4
SV-82 207-16A L; T-CW
IC5 (1/4),(2/4) Q8 DIRECTION CONTROL/AMP
RV8 CAPSTAN ACCELERATION COMPENSATION
IC11(2/3) PULSE WIDTH MODULATION
IC5(3/4) BUFF
IC2(1/4), Q2 DIRECTION CONTROL
IC4 TENSION DET
IC1(1/4) AMP
IC2(2/4),11(1/3) CASSETTE SIZE CONTROL
RV2 TENSION SENSOR AMP OFFSET
IC1(2/4) REG
RV3 TENSION SENSOR SENSITIVITY
RV1 TENSION SENSOR SUPPLIED VOLTAGE
V REF
TP1 TP2 TP3 TP4 TP5 TP6 TP7 TP8 TP9 TP10 TP11 TP12 TP13 TP14
RV15 S-REEL TORQUE
IC2 (3/4) MIX AMP
Q3 RESET MUTE
S-REEL MOTOR DRIVE 207-25A RE-46
RV4 S-REEL TORQUE
IC2(4/4) AMP
S-REEL CURRENT 207-23B RE-46
GND(REEL CURRENT) 207-23C RE-46
Q9 DRIVE
IC221
SV RESET COMMAND 207-21C SY-61
IC11(3/3) PULSE WIDTH MODULATION
IC5(4/4) INV. BUFF
T-REEL TORQUE
RV16
IC3 (2/3) MIX AMP
Q4 RESET MUTE
T-REEL MOTOR DRIVE 207-25B RE-46
RV13 T-REEL TORQUE
IC3(3/3) AMP
T-REEL CURRENT 207-24A RE-46
GND(REEL CURRENT) 207-24B RE-46
IC3(1/3),Q5 DIRECTION CONTROL
R91,C17 L P F
IC1(3/4) BUFFER
TAPE TENSION 1 207-22C SV-82
IC1(4/4) AMP
TAPE TENSION 2 207-23A SV-82
RE-46 207-20A S-REEL FG-1
RE-46 207-20B S-REEL FG-2
RE-46 207-20C T-REEL FG-1
RE-46 207-21A T-REEL FG-2
IC6(1/4) SHAPER
IC7(1/2) LEVEL COMP
RV9 T-REEL FG DUTY
IC6(2/4) SHAPER
IC7(2/2) LEVEL COMP
RV10 T-REEL FG DUTY
IC6(3/4) SHAPER
IC8(2/2) LEVEL COMP
RV11 S-REEL FG DUTY
IC6(4/4) SHAPER
IC8(2/2) LEVEL COMP
RV12 S-REEL FG DUTY
S-REEL SHAPED FG(A) 207-7A SV-82
IC10(1/2) 4FG GEN/ DIR DET
S-REEL 4FG 207-7B SV-82
S-REEL REV/FWD DET 207-7C SV-82
T-REEL SHAPED FG(A) 207-8A NC
IC10(2/2) 4FG GEN/ DIR DET
T-REEL 4FG 207-8B SV-82
T-REEL REV/FWD DET 207-8C SV-82
SV-82 207-24C SV-CLOCK
SV-82 207-5A V REF

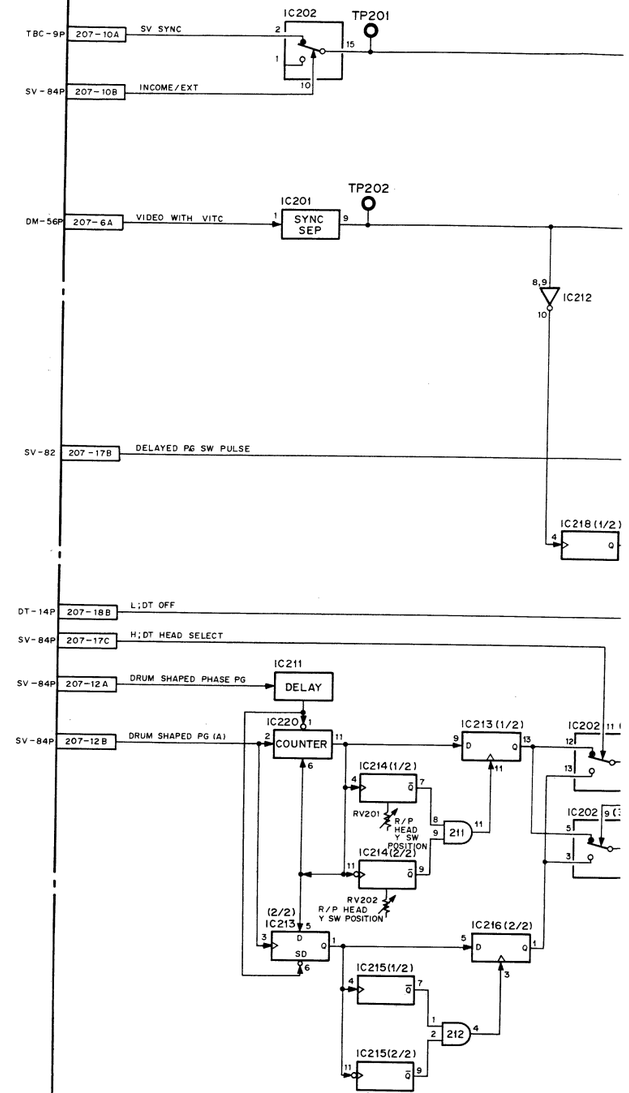
TBC-9P 207-10A SV SYNC
SV-84P 207-10B INCOME/EXT
IC202
TP201
DM-56P 207-6A VIDEO WITH VITC
IC201 SYNC SEP
TP202
IC212
SV-82 207-17B DELAYED PG SW PULSE
IC218(1/2)
DT-14P 207-18B L;DT OFF
SV-84P 207-17C H;DT HEAD SELECT
SV-84P 207-12A DRUM SHAPED PHASE PG
SV-84P 207-12B DRUM SHAPED PG (A)
IC211 DELAY
IC220 COUNTER
IC213(1/2)
IC214(1/2)
RV201 R/P HEAD Y SW POSITION
211
IC214(2/2)
RV202 R/P HEAD Y SW POSITION
IC213 (2/2) SD
IC216(2/2)
IC215(1/2)
212
IC215(2/2)

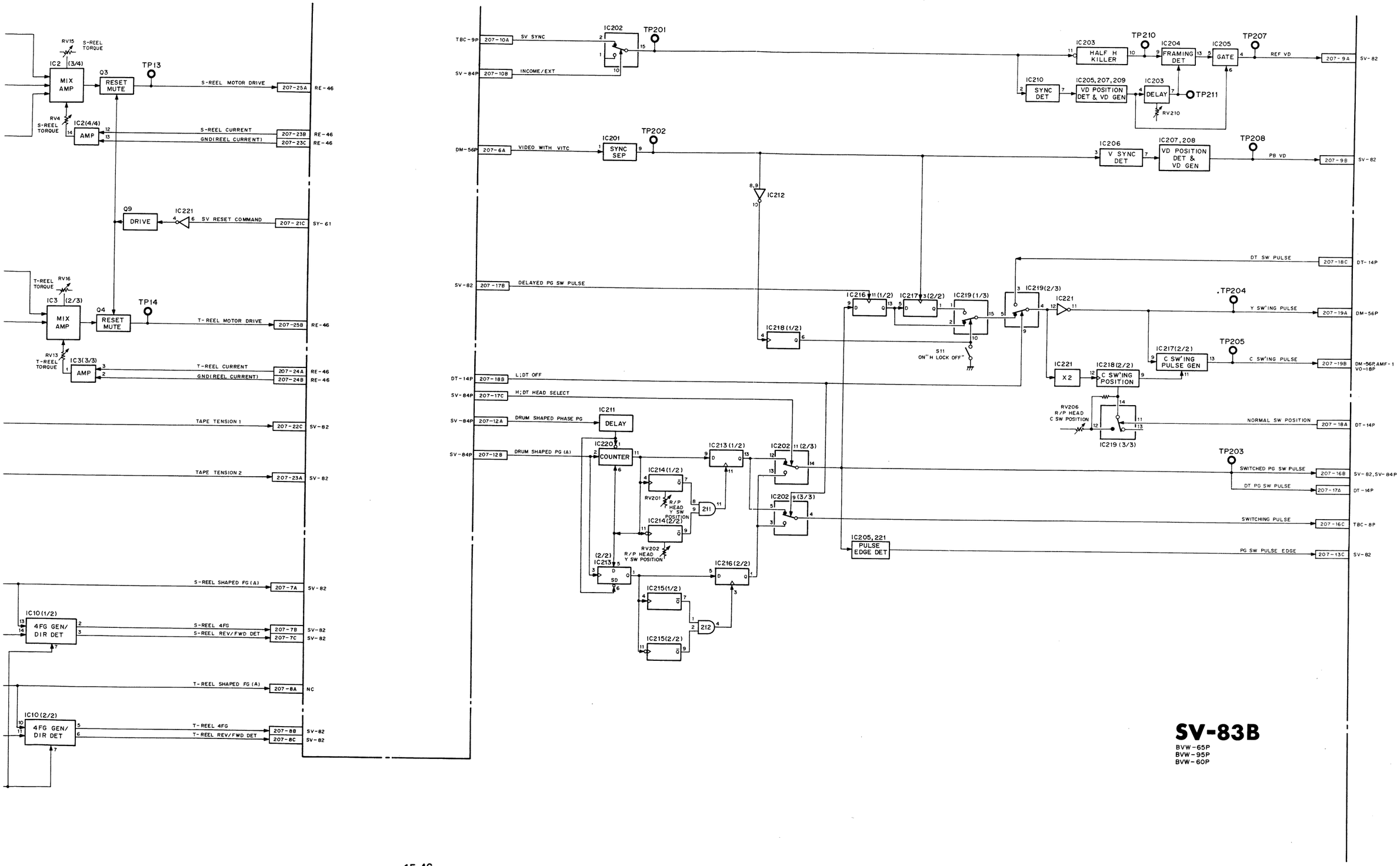


**SV-83B**

BVW-65P
BVW-95P
BVW-60P

# DRUM/CAPSTAN SERVO

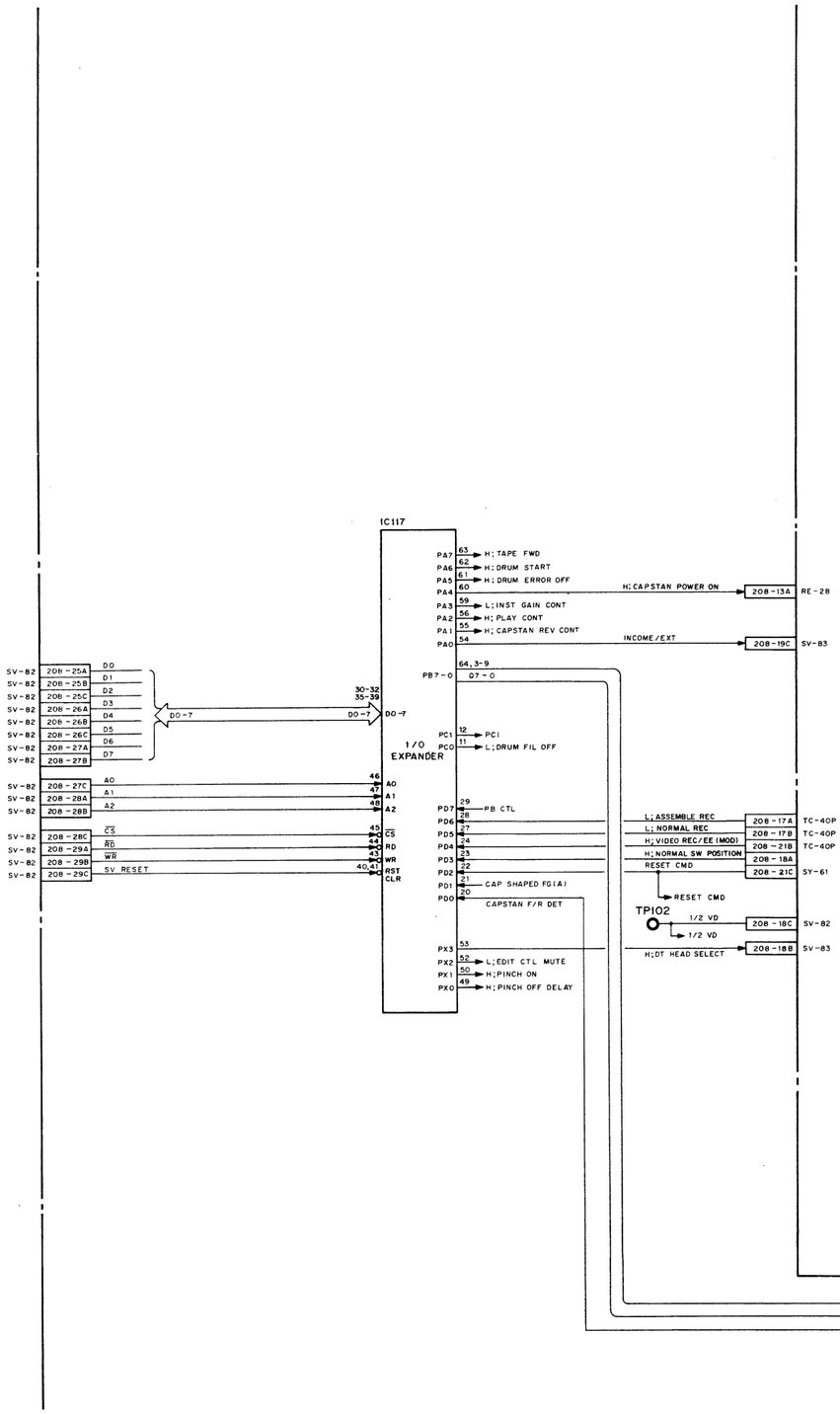






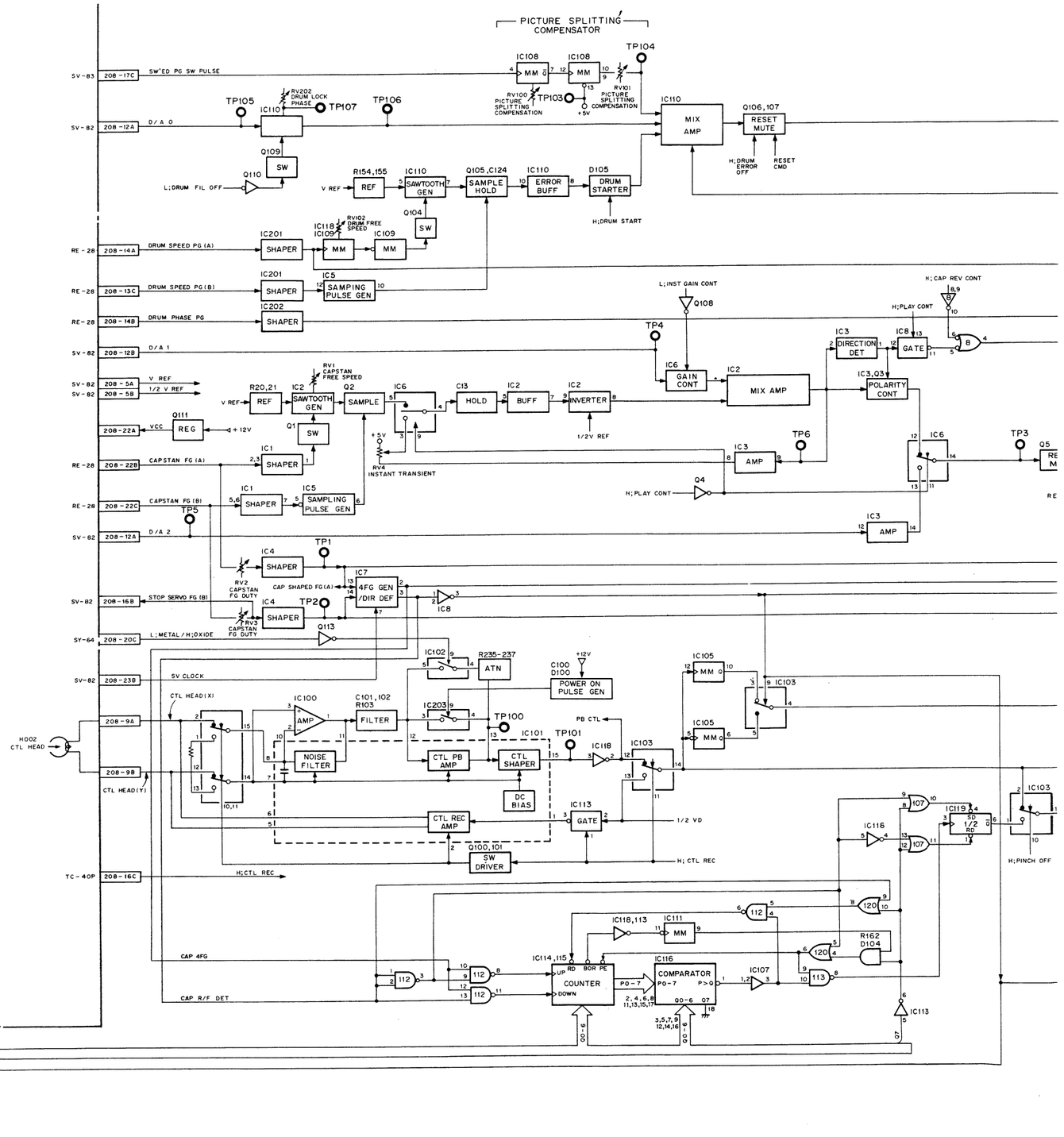

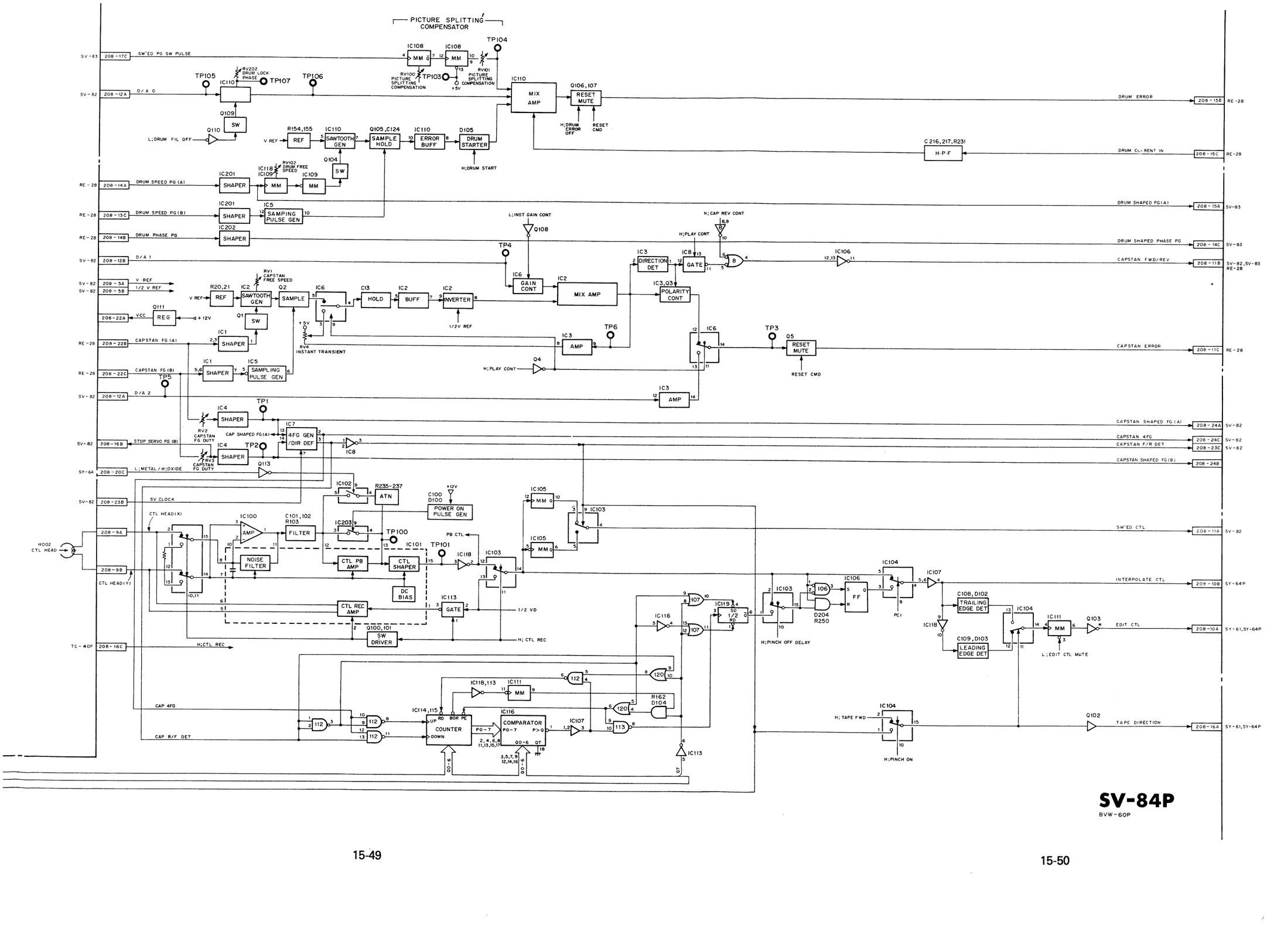


**SV-84P**
BVW-60P

# SYSTEM CONTROL

NOTE

| MARK | CHANGE INFORMATION | SERIAL NO. |
|---|---|---|
| *1 | IC39 32k → 64k<br>A0~A14 → A0~A15 | S/N 10538 ~ |

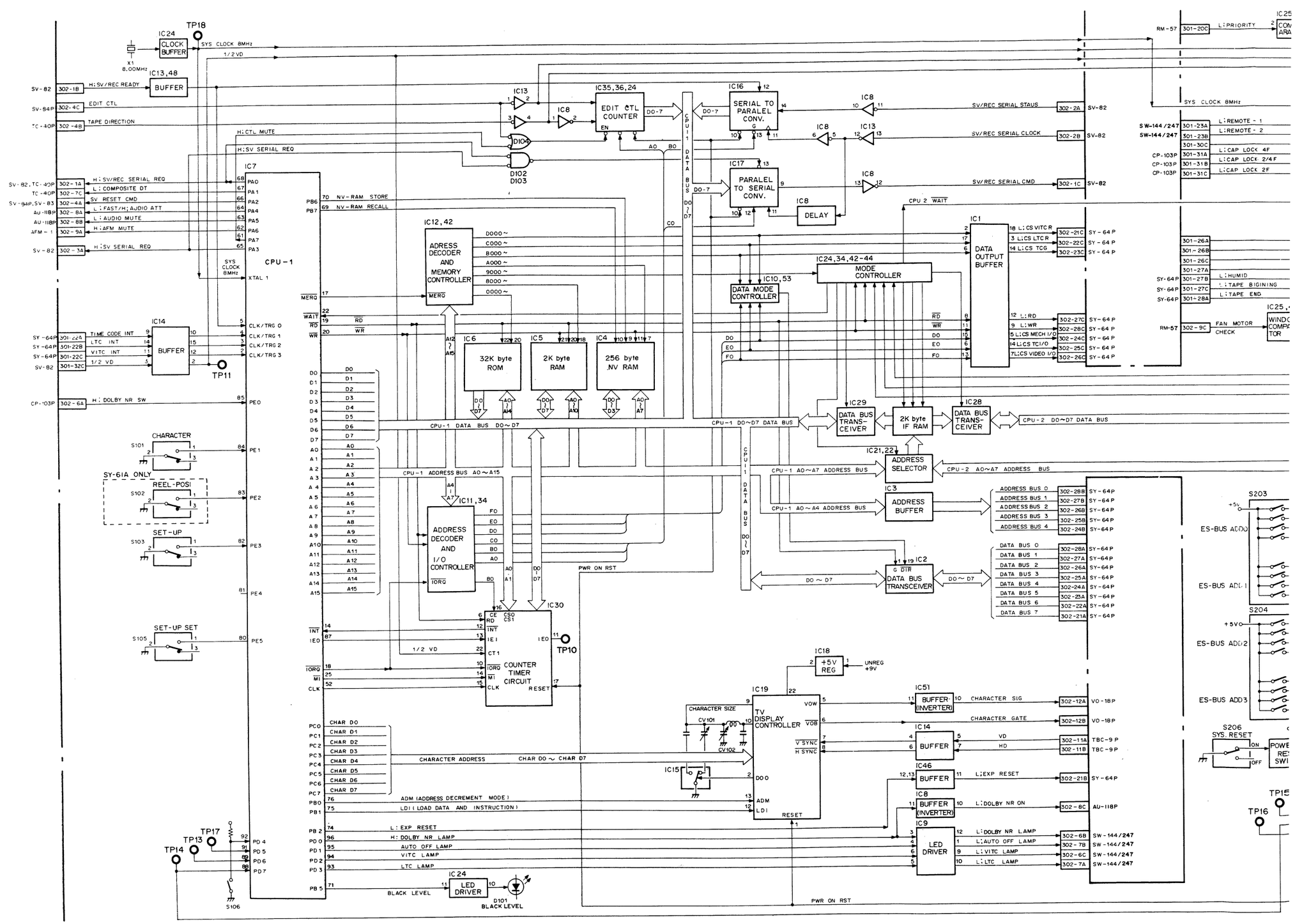

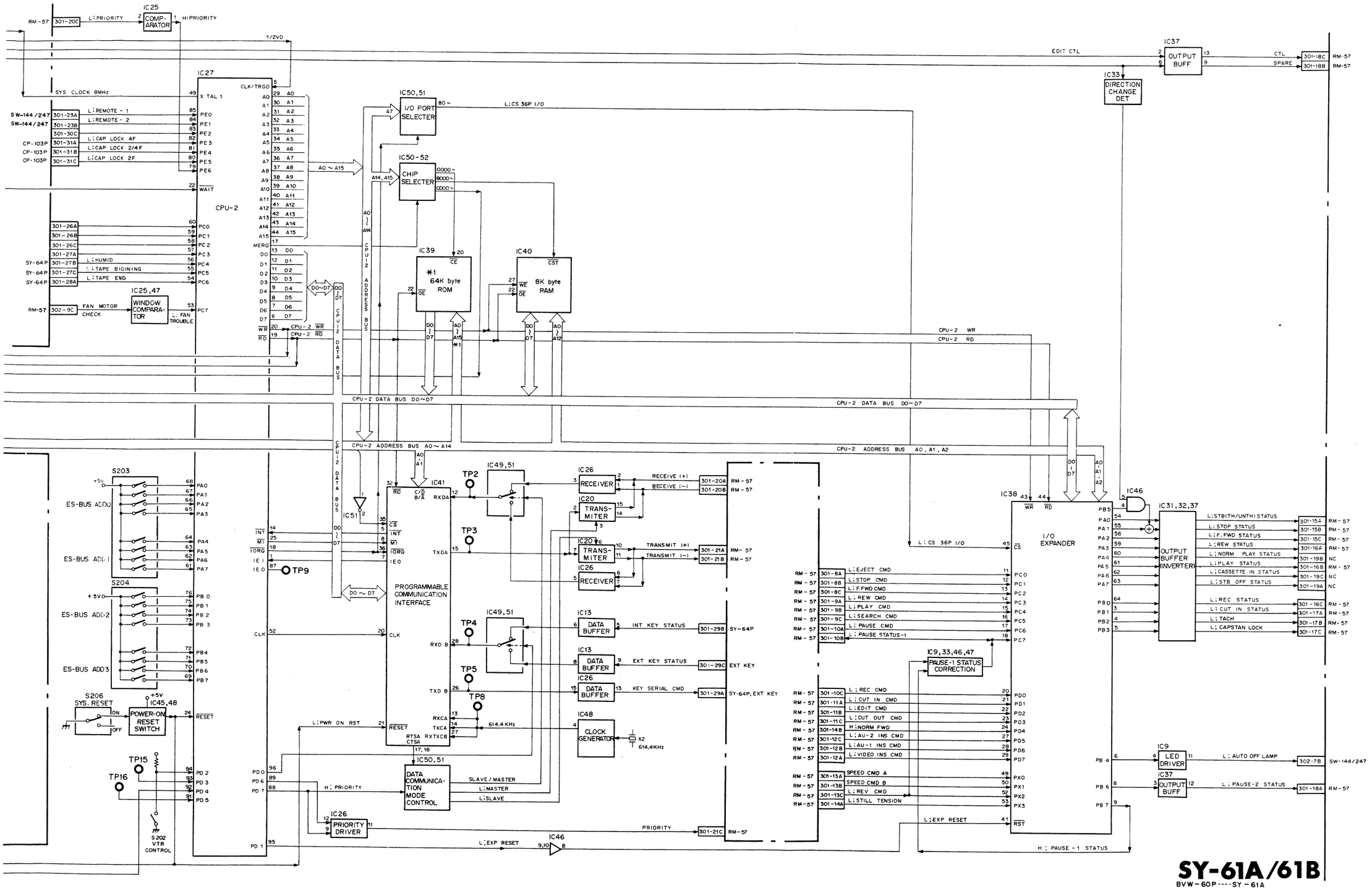


**SY-61A/61B**

BVW-60P----SY-61A
BVW-65P----SY-61A
BVW-95P----SY-61B

# I/O EXPANDER
# TIME CODE READER
# TIME BASE IMPACT ERROR CORRECTOR

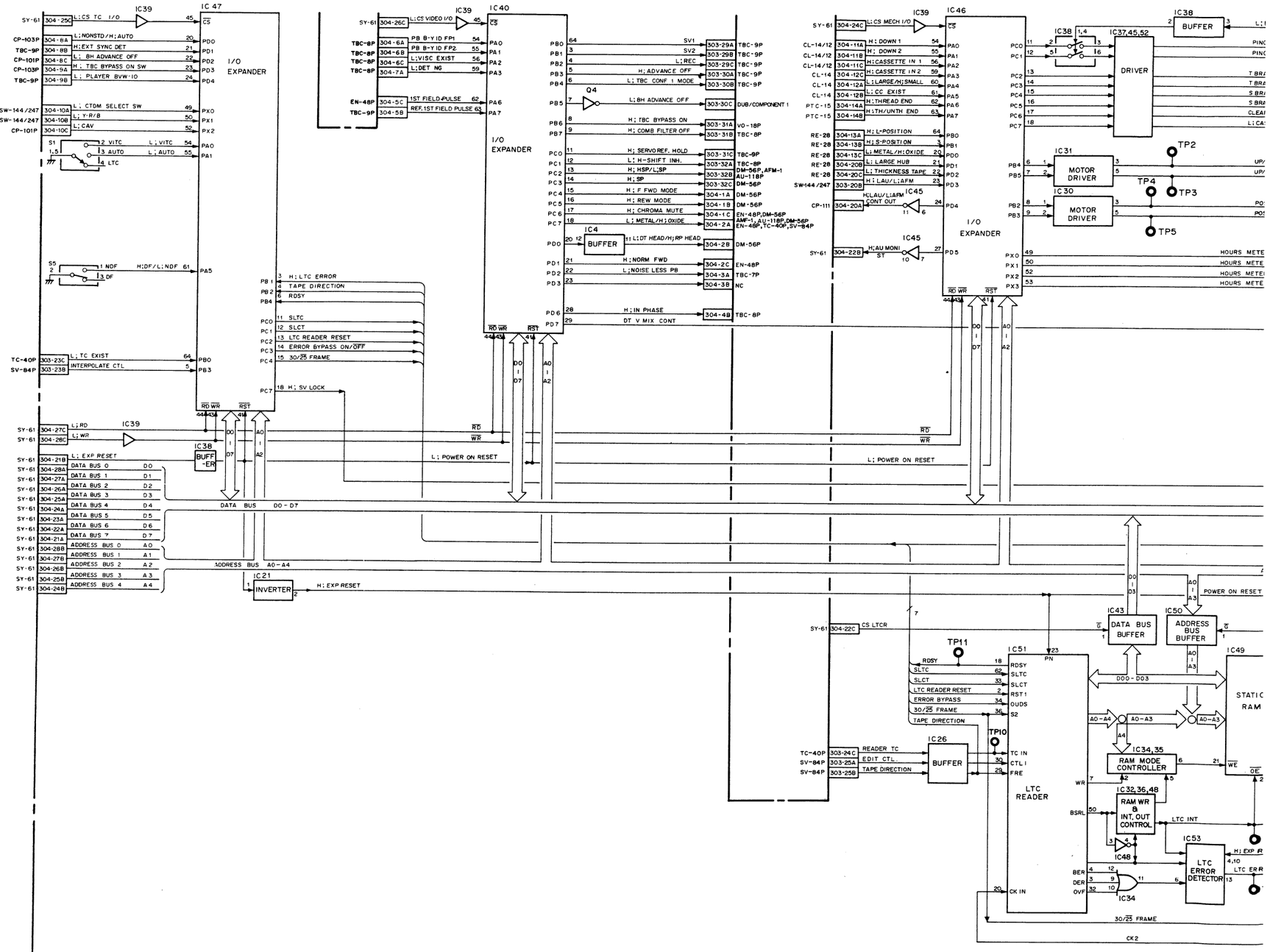

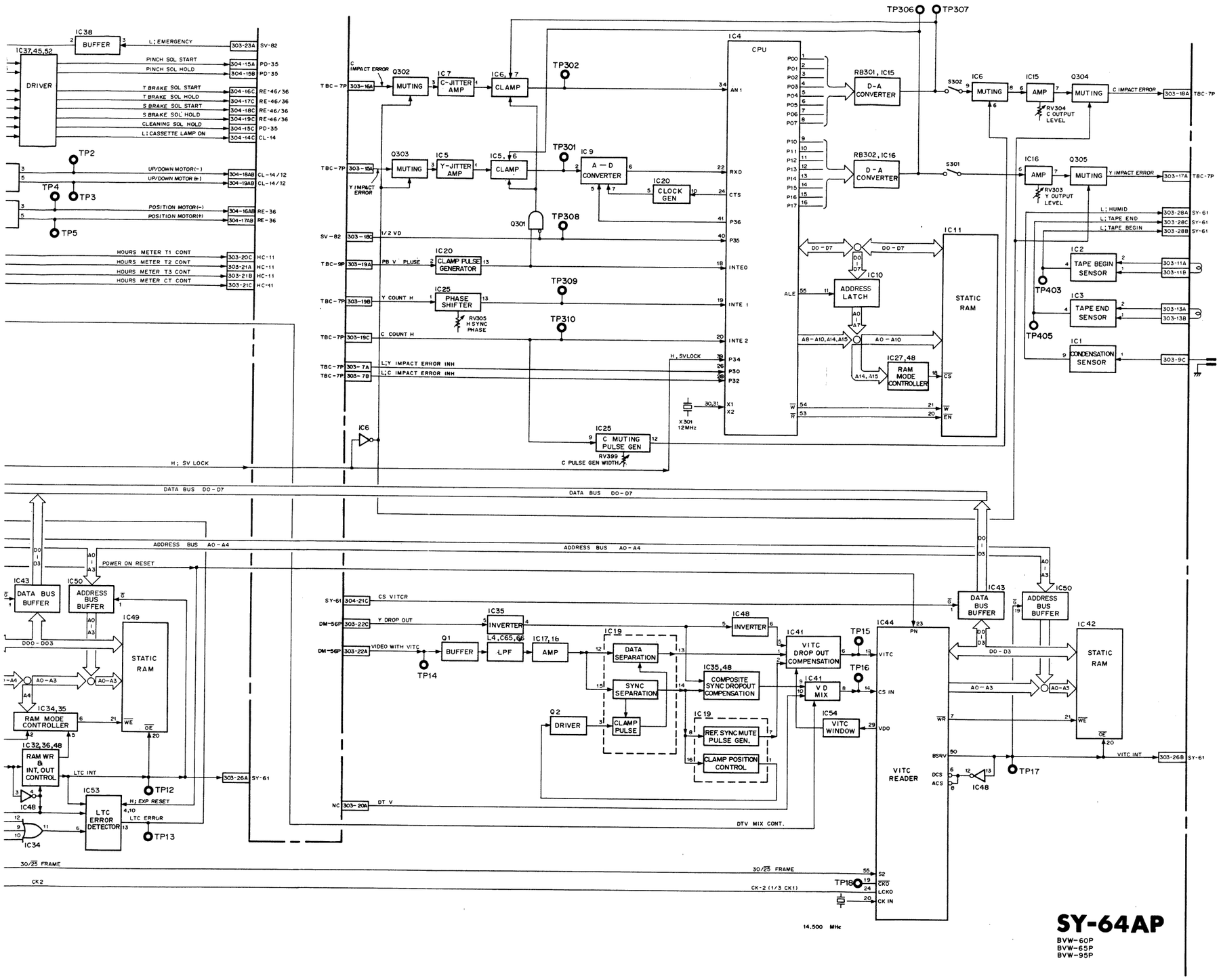


# SY-64AP

BVW-60P
BVW-65P
BVW-95P

# LTC PB AMPLIFIER

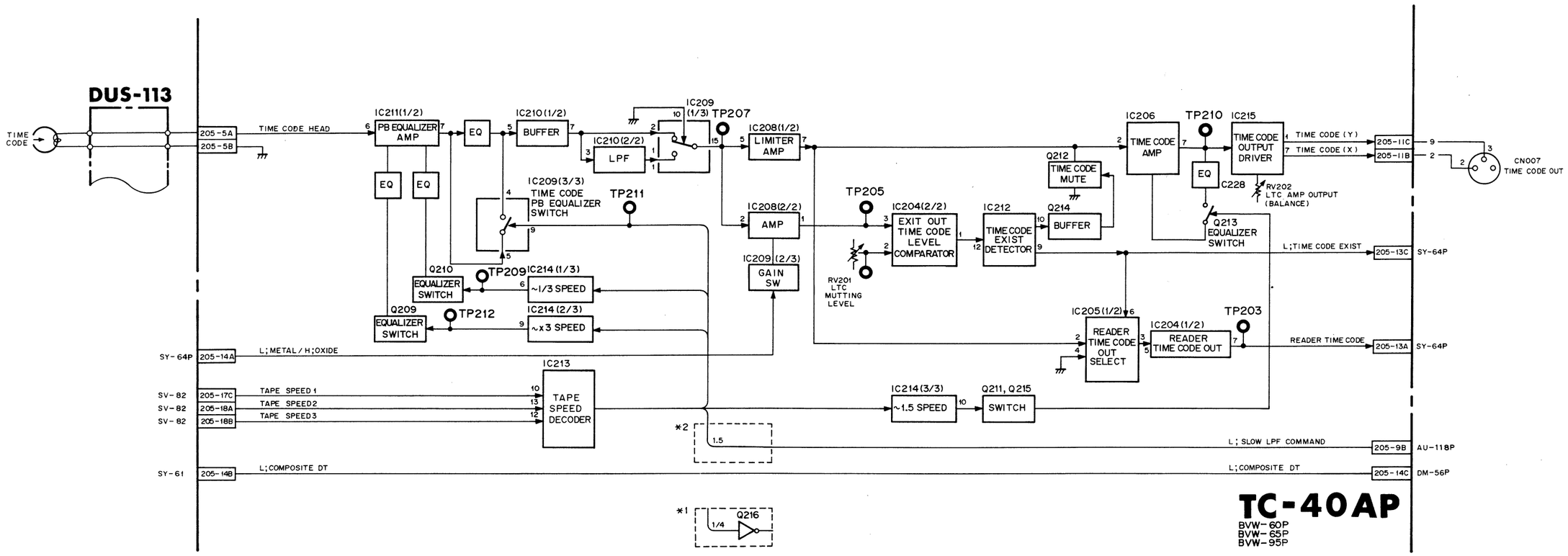


*1... Serial No. up to 10455

*2... Serial No. 10456 and higher

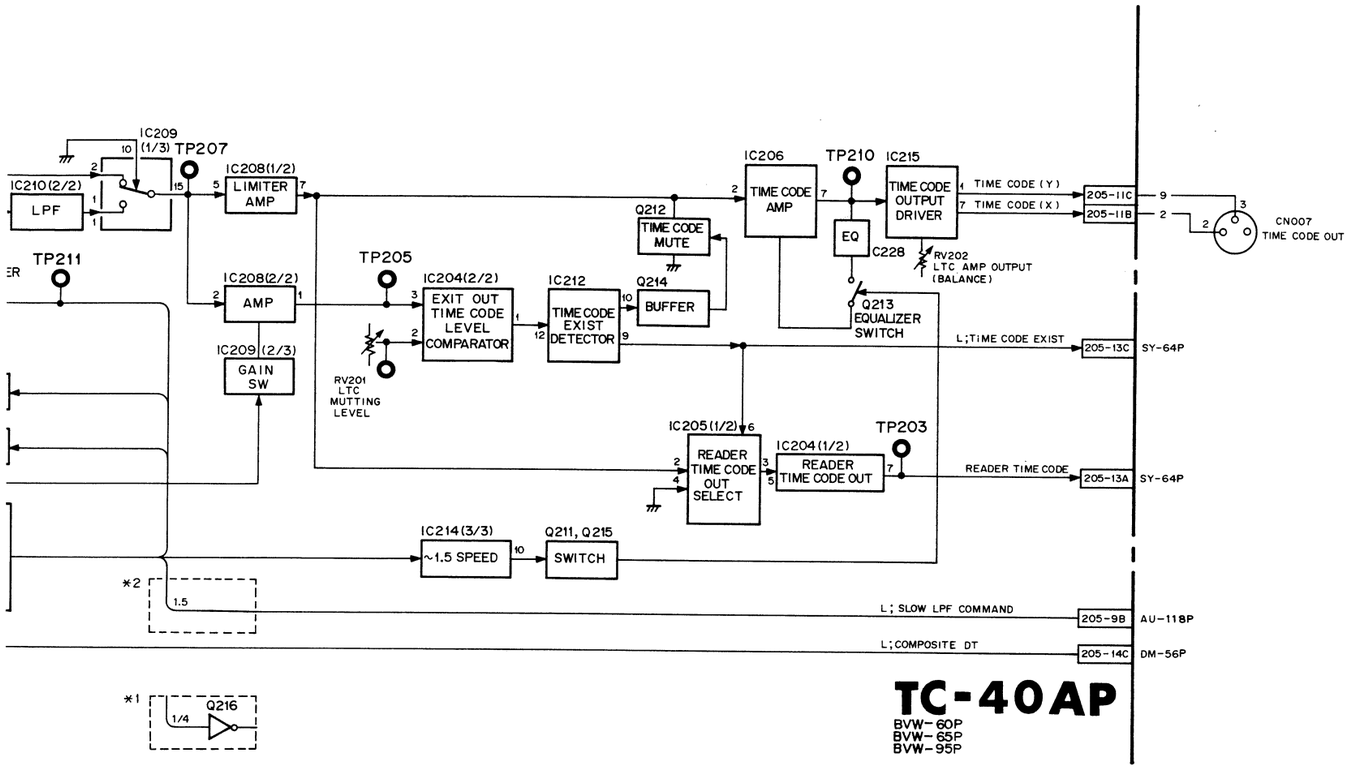


**TC-40AP**
BVW-60P
BVW-65P
BVW-95P

*1... Serial No. up to 10455
*2... Serial No. 10456 and higher

# SECTION 16
# SCHEMATIC DIAGRAM

## CIRCUIT CONFIGURATION

The circuit information is provided below.

| System | Board | Circuit function |
|---|---|---|
| VIDEO | DM-56P | Y/C Demodulator |
| | DUS-259 | Metal/Oxide LPF Switch |
| | DUS-269 | C RF Phase EQ. |
| | DUS-288 *4 | DO RF EQ. |
| | EQ-26 *4 | RF EQ. |
| | EQ-28 *4 | RF EQ. |
| | TBC-7P *7 | Time Base Corrector |
| | SW-261 *3 | Metal/Oxide Y/C Delay Adjust Volume |
| | TBC-7D *8 | Time Base Corrector |
| | TBC-8P *7 | Time Base Corrector |
| | NR-25 *7 | Y Digital Noise Reduction |
| | TBC-12P *8 | Time Base Corrector |
| | NR-32 *8 | Y Digital Noise Reduction, Read Clock Generator |
| | TBC-9P | Time Base Corrector |
| | EN-48P | C Encoder |
| | VO-18AP | Video Output |
| | DUS-270 | Squelch Buffer |
| | DEC-39A*5 | Edge Detector |
| | DEC-46AP *6 | Edge Detector |
| | CP-103AP | Sub Control Panel |
| | CP-101AP | REF. Video Input |
| AUDIO | AU-118P | LNG Audio Head Amplifier |
| | AFM-1A | AFM Audio Demodulator |
| | FL-61 | Low-pass Filter |
| | BF-28A | Audio Buffer/Level Detector |
| | VR-42 | Audio PB Volume |

| System | Board | Circuit function |
|---|---|---|
| AUDIO | CP-111 | Audio Output Amplifier/Driver |
| | CP-113 | Audio Balanced Amplifier |
| | HP-33 | Headphones Amplifier/ Jack |
| | VR-62 | Headphones Level Volume |
| | DP-74 | Audio Level Meter |
| | DP-73 | DC-AC/DC Converter |
| | SW-144A | Select Switch/Display |
| | DP-72 | RF Meter LED |
| | VR-61 | Tracking Control Volume |
| SERVO | SV-82A | Capstan/Drum Servo |
| | SV-83B | Reel Servo |
| | SV-84P | Capstan/Drum Servo |
| | RE-28 | Capstan/Drum Motor Driver |
| | PTC-20 | Cassette Detector (Tape Thickness, Reel Hub Diameter, Metal/Oxide) |
| | PTC-36 | Cassette Detector (Tape Thickness, Reel Hub Diameter, Metal/Oxide) |
| | PTC-21 | Reel Table Position Detector |
| | DR-56 | Capstan/Reel Motor Driver & Drum Error Amplifier |
| | RE-36 | Reel Motor Driver |
| | RM-40 | Reel Motor |
| | DE-15 | Reel Motor FG |
| | SE-57 | Threading Motor Control |
| | PTC-31 | Threading Motor FG |
| | TR-18 | Tape Tension Sensor |

| System | Board | Circuit function |
|---|---|---|
| SYSTEM CONTROL | SY-61A | System Control |
| | SY-64AP | Time Code Reader |
| | KY-96C | Keyboard |
| | KY-107A | Keyboard |
| | DP-71A | Time Counter Display |
| | PTC-32 | Search Dial |
| | PT-9 | Power Transistor |
| | PD-35 | Pinch/Cleaning Solenoid |
| | PTC-15 | Thread/Unthread End Sensor |
| | RM-57 | Remote Connector |
| | TC-40AP | LTC PB Amplifier |
| | CL-14 | Cassette-up Compartment |
| | CL-24 *9 | Cassette-up Compartment LED |
| | PC-32 *1 | Large/Small Cassette Detector |
| | PC-47 *2 | Large/Small Cassette Detector |
| | PC-33 | Cassette DOWN Detector |
| | PC-41 | Cassette IN Detector |
| | CCM-2 | UP/DOWN Motor |
| | HC-11 | Hours Meter |
| OTHERS | AC-81 *1 | Relay Board of AC Inlet |
| | AC-96 *2 | Relay Board of AC Inlet |
| | M1 | Switching Regulator |
| | M2 | Switching Regulator |
| | C1 | Switching Regulator |
| | C2 | Switching Regulator |
| | MB-191C | Mother Board |
| | MB-192 | Mother Board |
| | EX-116 | Extension Board |
| | EX-134 | Extension Board |
| | EX-151 | Extension Board |

NOTE

In the schematic diagrams, the following marks are described nearby reference number. These are parts data at factory.

CAPACITOR (C)

AL, AS — ELECTROLYTIC
TA — TANTALUM
CA, CC, CCS, CM, CS — CERAMIC
MPS, PP, PS, PT — MAYLAR
MD — DIPPED MICA
MS — MICA

RESISTOR(R)
VARIABLE RESISTOR(RV)

RC, RD — CARBON
RF — FUSE
RN, RS — METAL
RW — WIREWOUND

*1... Serial No.: up to 10170
*2... Serial No.: 10171 and higher
*3... Serial No.: up to 10270
*4... Serial No.: 10271 and higher
*5... Serial No.: up to 10622
*6... Serial No.: 10623 and higher
*7... Serial No.: up to 10712
*8... Serial No.: 10713 and higher
*9... Serial No.: 11083 and higher

# DM-56P (1/2); Y DEMODULATOR

S/N 10001 through 10270

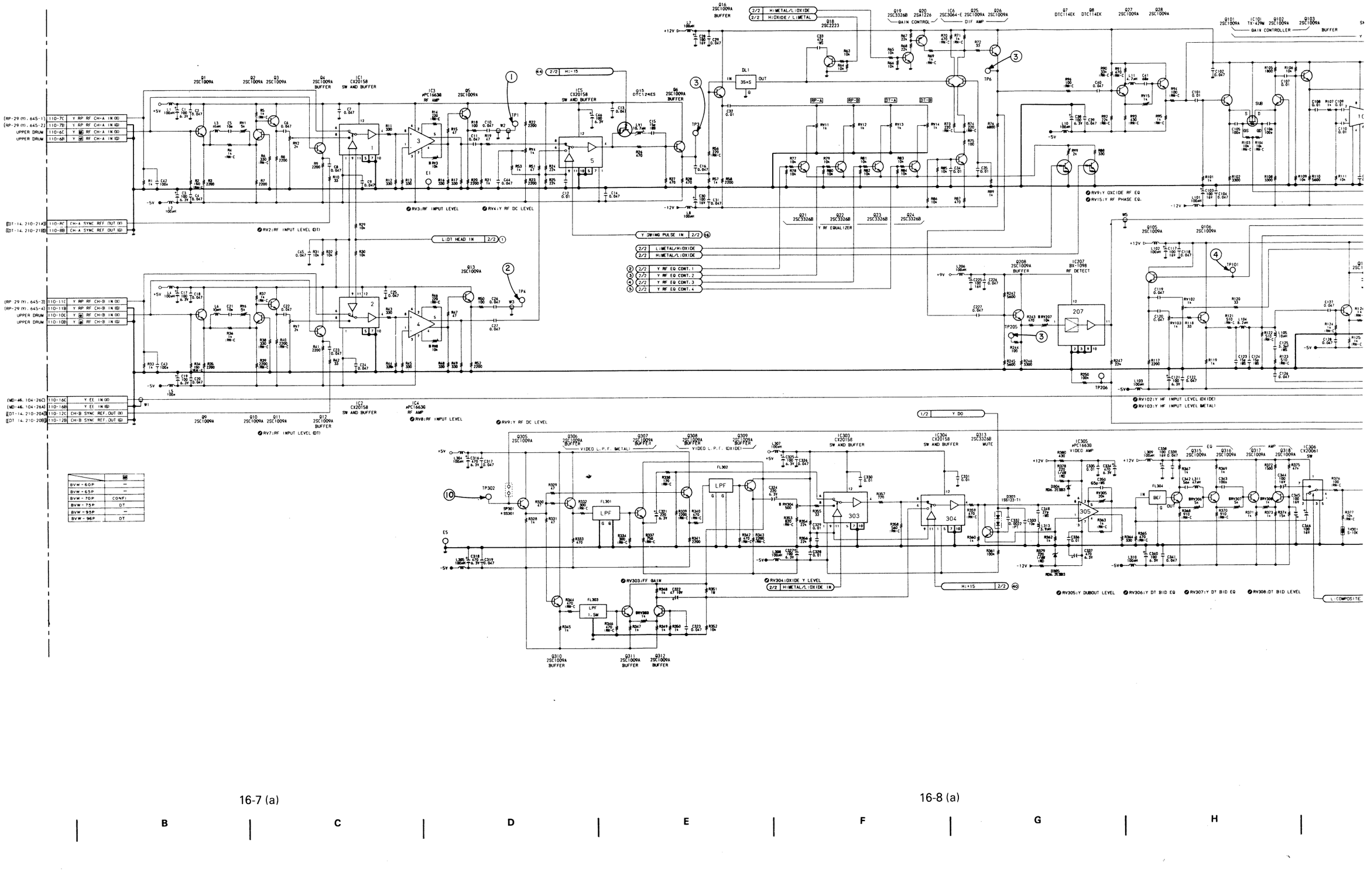


16-7 (a)

16-8 (a)

A B C D E F G H

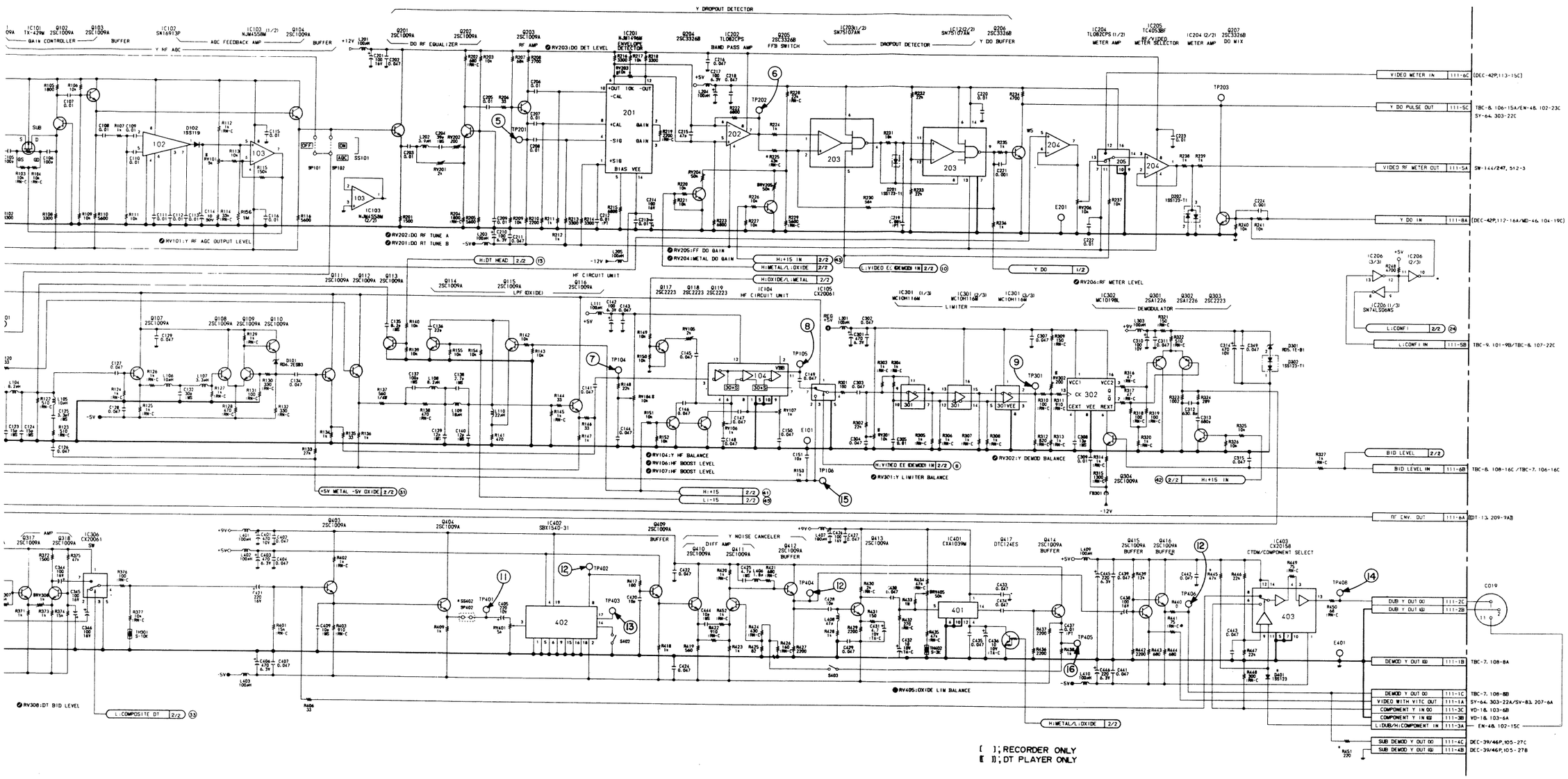


**DM-56P(1/2)**
**1-622-545-31, 32**
**BVW-60P BVW-70P**
**BVW-65P BVW-75P**
**BVW-95P BVW-96P**

16-9 (a)

16-10 (a)

I J K L M N O P

DM-56P (1/2), EQ-26, DUS-288

# DM-56P (1/2); Y DEMODULATOR
# EQ-26; RF EQUALIZER
# DUS-288; DO RF EQUALIZER

S/N 10271 and higher

NOTE

| MARK | CHANGE INFORMATION | SERIAL NO. |
|---|---|---|
| *1 | C47 22pF ADDED<br>C48 22pF ADDED | S/N 10456 ~ |
| *2 | R390 470 ADDED<br>RV204 50k → 100k<br>RV305 20k → 2k | S/N 10536 ~ |
| *3 | R69 1k → 1200<br>R71 1k → 620<br>R101 1k → 4700<br>R115 150k → 330k<br>R228 22k → 12k<br>RV205 50k → 100k | S/N 10713 ~ |

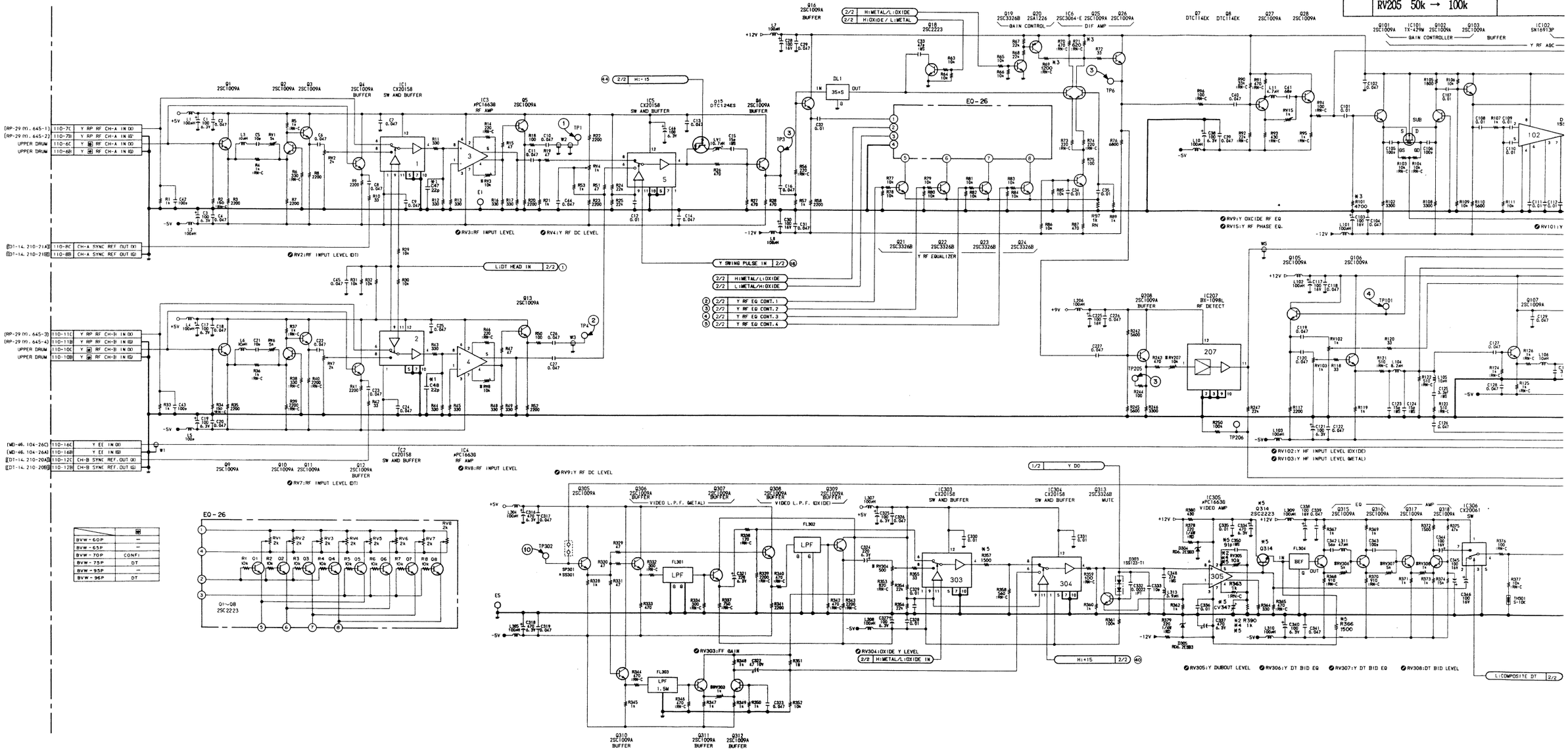


16-7 (b)

16-8 (b)

A B C D E F G H

DM-56P (1/2), EQ-26, DUS-288

| ANGE INFORMATION | SERIAL NO. |
|---|---|
| 22pF ADDED<br>22pF ADDED | S/N 10456 ～ |
| 470 ADDED<br>50k → 100k<br>20k → 2k | S/N 10536 ～ |
| 1k → 1200<br>1k → 620<br>1k → 4700<br>150k → 330k<br>22k → 12k<br>50k → 100k | S/N 10713 ～ |

| | | |
|---|---|---|
| *4 | R390 470 → 47<br>RV305 2k → 5k | S/N 10928 ～ |
| *5 | RV105 2k → 5k<br>C350 36pF → 91pF<br>CV347 ADDED<br>Q314 2SC2223 ADDED<br>R357 470 → 1500<br>R366 1500 ADDED<br>R390 47 → 1k<br>RV305 5k → 10k | S/N 10948 ～ |
| *6 | RV405 50k → 100k | S/N 11103 ～ |

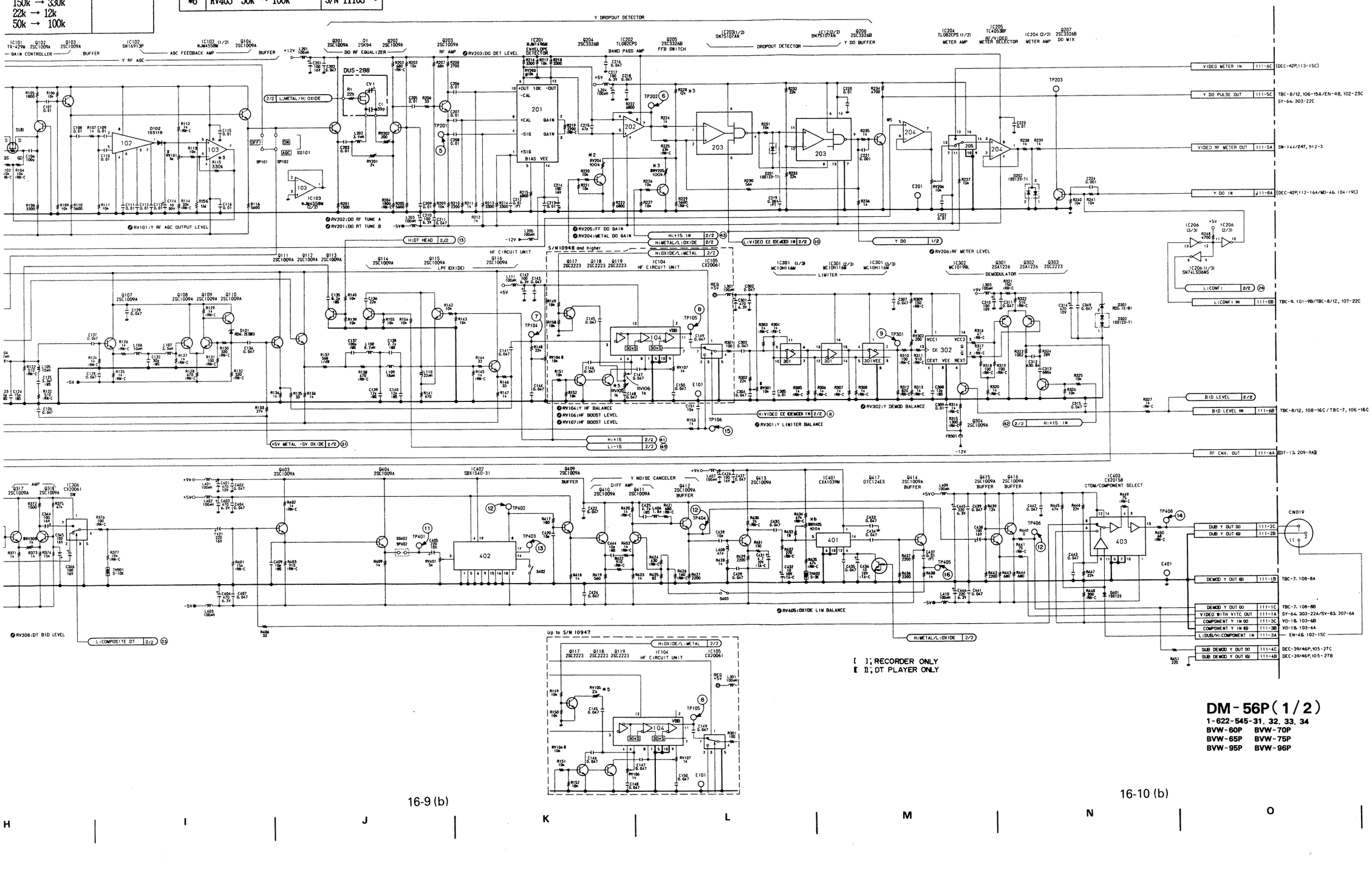


**DM-56P(1/2)**
**1-622-545-31, 32, 33, 34**
**BVW-60P BVW-70P**
**BVW-65P BVW-75P**
**BVW-95P BVW-96P**

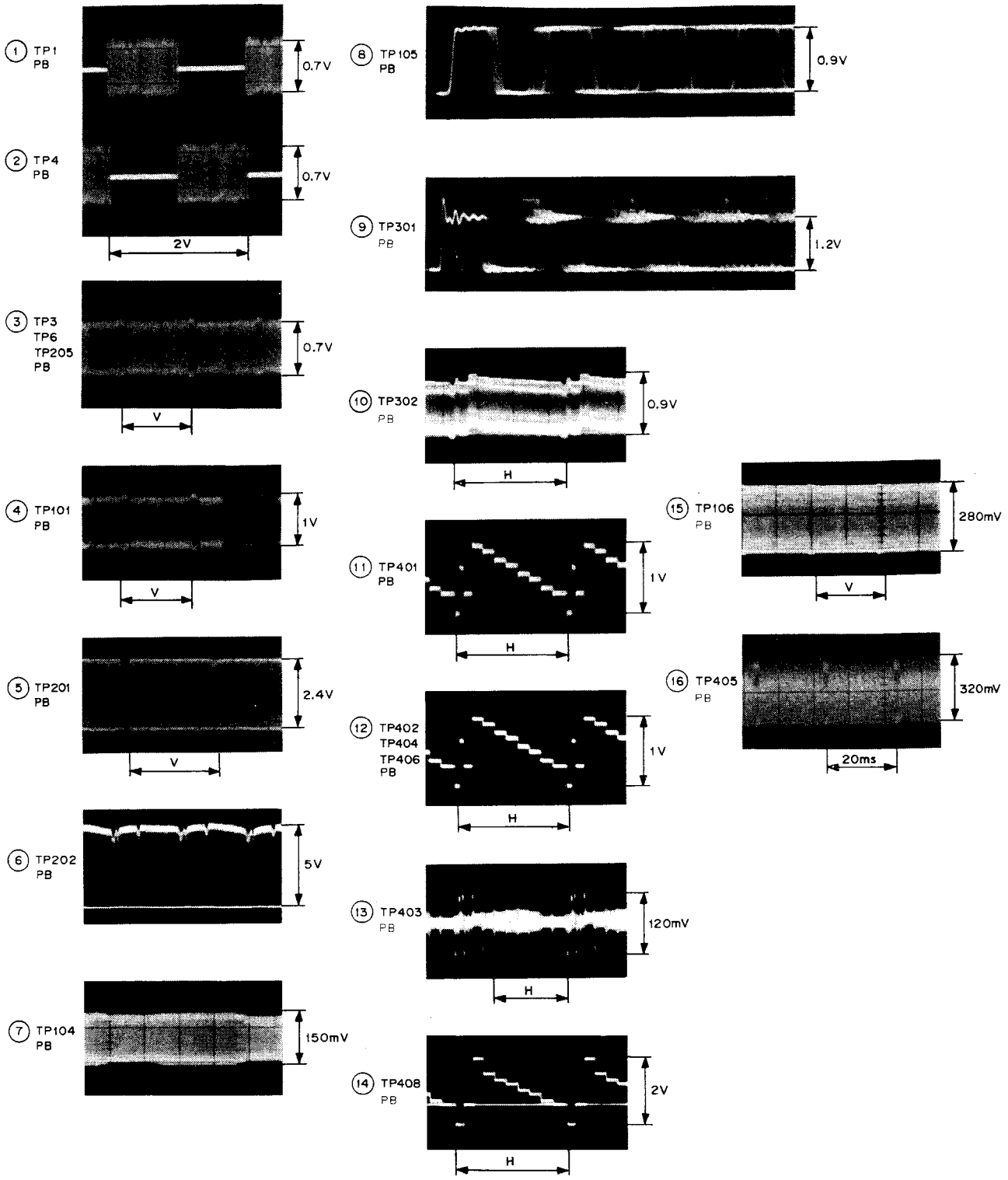
① TP1 PB
0.7V
② TP4 PB
0.7V
2V
③ TP3 TP6 TP205 PB
0.7V
V
④ TP101 PB
1V
V
⑤ TP201 PB
2.4V
V
⑥ TP202 PB
5V
⑦ TP104 PB
150mV
⑧ TP105 PB
0.9V
⑨ TP301 PB
1.2V
⑩ TP302 PB
0.9V
H
⑪ TP401 PB
1V
H
⑫ TP402 TP404 TP406 PB
1V
H
⑬ TP403 PB
120mV
H
⑭ TP408 PB
2V
H
⑮ TP106 PB
280mV
V
⑯ TP405 PB
320mV
20ms

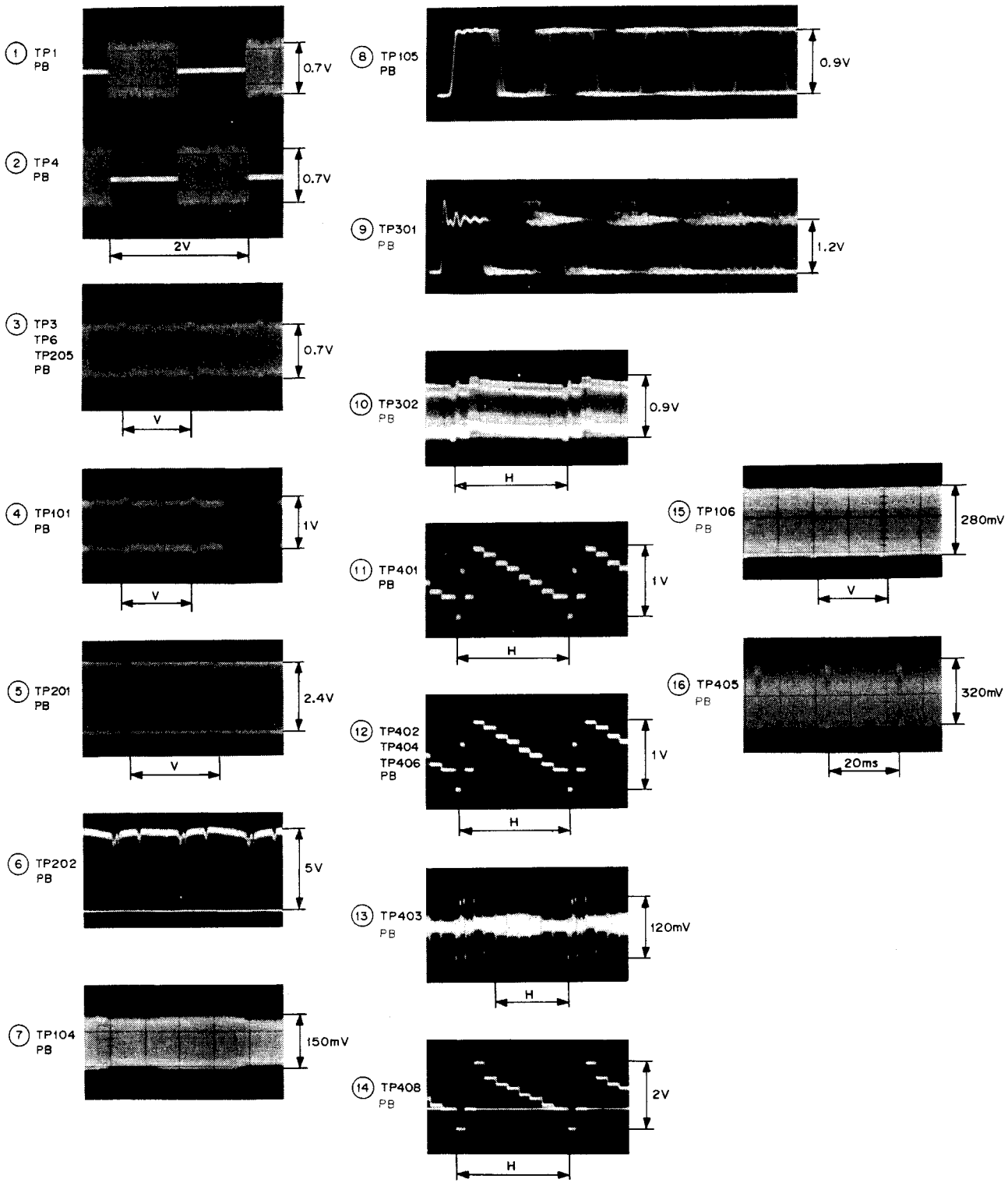
① TP1 PB
0.7V
② TP4 PB
0.7V
2V
③ TP3 TP6 TP205 PB
0.7V
V
④ TP101 PB
1V
V
⑤ TP201 PB
2.4V
V
⑥ TP202 PB
5V
⑦ TP104 PB
150mV
⑧ TP105 PB
0.9V
⑨ TP301 PB
1.2V
⑩ TP302 PB
0.9V
H
⑪ TP401 PB
1V
H
⑫ TP402 TP404 TP406 PB
1V
H
⑬ TP403 PB
120mV
H
⑭ TP408 PB
2V
H
⑮ TP106 PB
280mV
V
⑯ TP405 PB
320mV
20ms

# DM-56P (2/2); C DEMODULATOR
# DUS-259; METAL/OXIDE LPF SWITCH
# DUS-269; C RF PHASE EQUALIZER

S/N 10001 through 10270

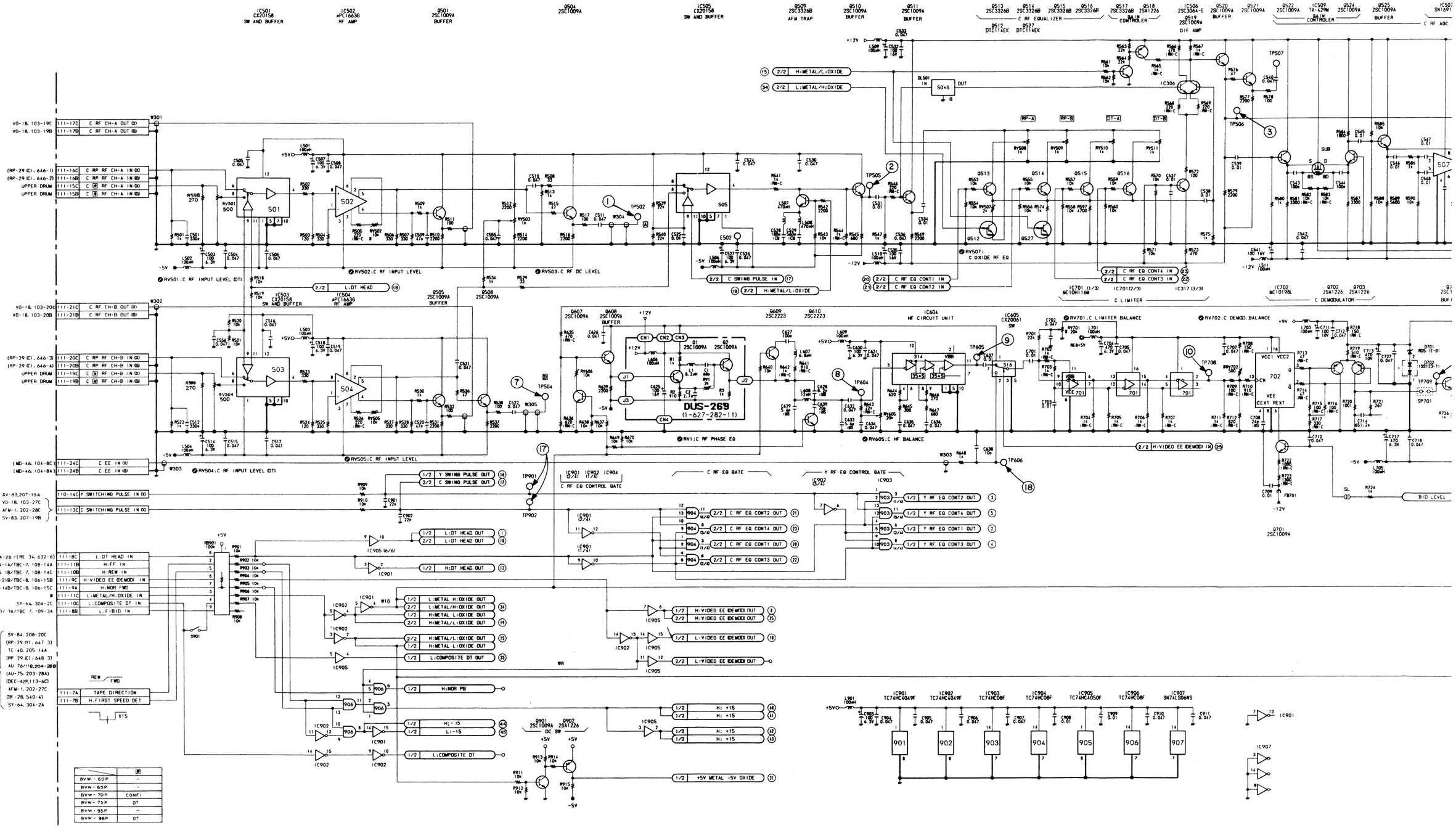


| | B |
|---|---|
| BVW-60P | - |
| BVW-65P | - |
| BVW-70P | CONFI |
| BVW-75P | DT |
| BVW-95P | - |
| BVW-96P | DT |

16-15(a)

16-16(a)

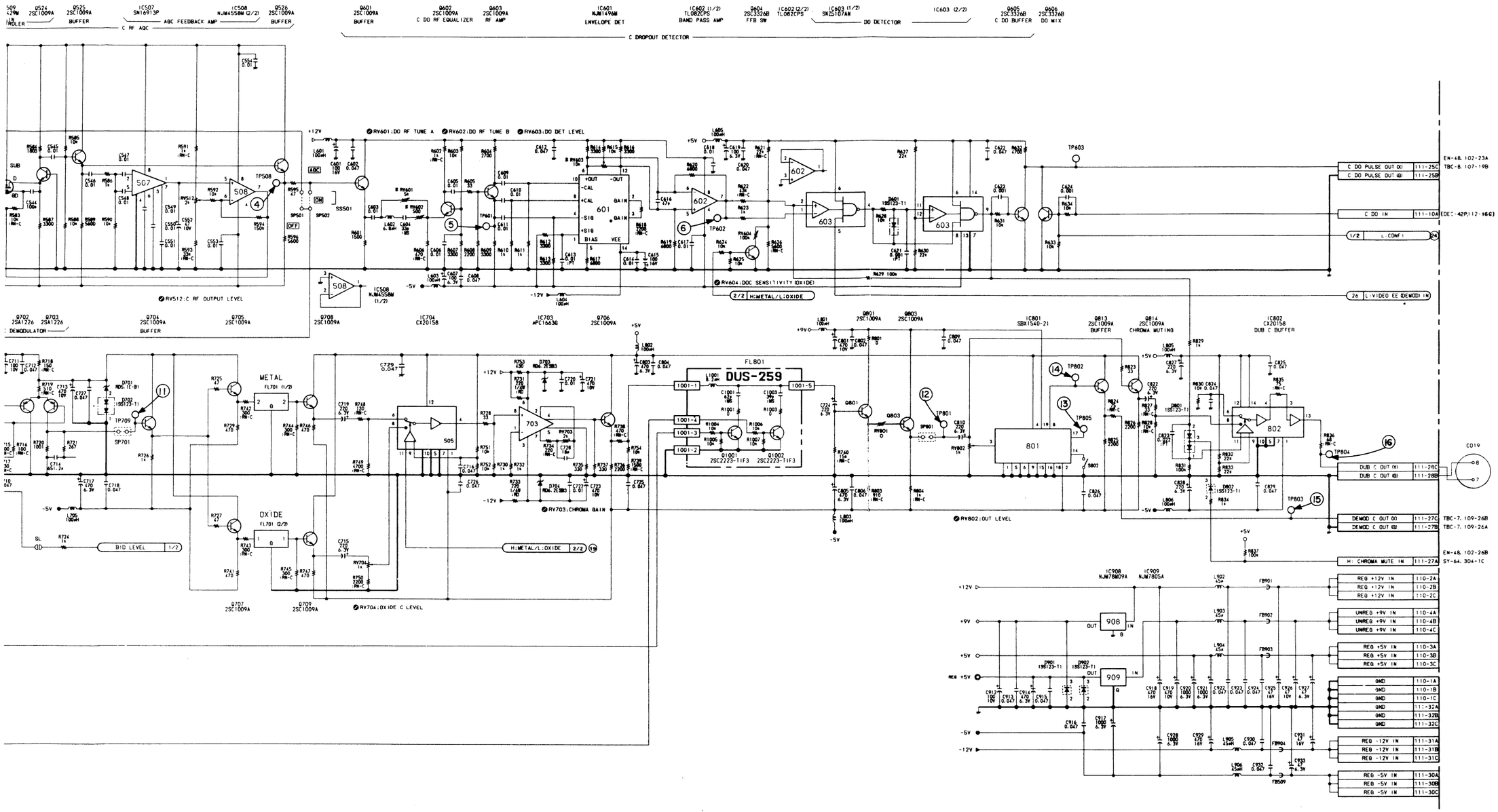


( ); RECORDER ONLY
[[ ]]; DT PLAYER ONLY

**DM-56P (2/2)**
1-622-545-31,32
BVW-60P BVW-70P
BVW-65P BVW-75P
BVW-95P BVW-96P

DM-56P (2/2), EQ-28, DUS-259/269

**DM-56P** (2/2) ; C DEMODULATOR
**DUS-259** ; METAL/OXIDE LPF SWITCH
**DUS-269** ; C RF PHASE EQUALIZER
**EQ-28** ; RF EQUALIZER

S/N 10271 and higher

16-15 (b)

16-16 (b)

DM-56P (2/2), EQ-28, DUS-259/269

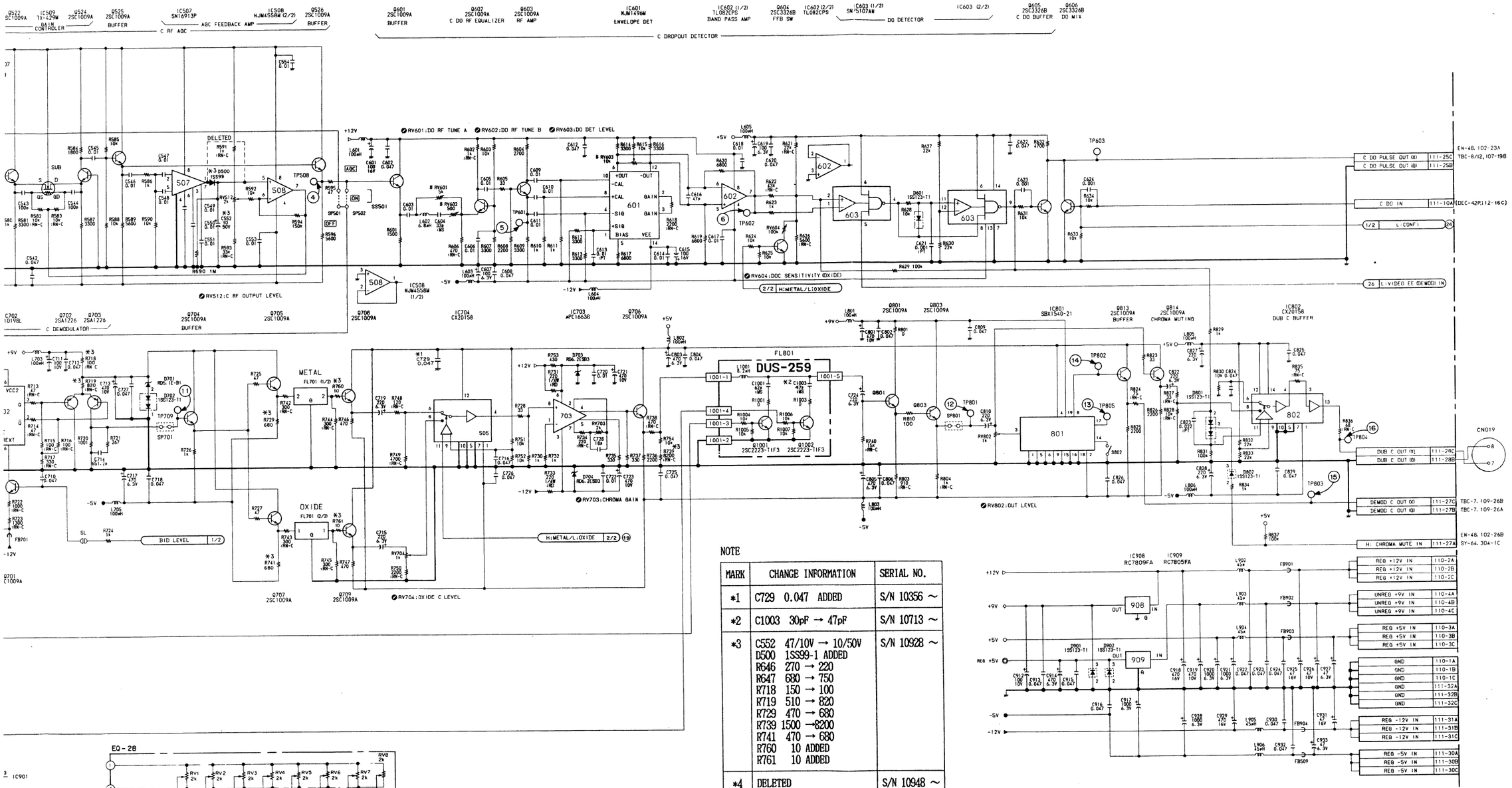


NOTE

| MARK | CHANGE INFORMATION | SERIAL NO. |
|---|---|---|
| *1 | C729 0.047 ADDED | S/N 10356 ~ |
| *2 | C1003 30pF → 47pF | S/N 10713 ~ |
| *3 | C552 47/10V → 10/50V<br>D500 1SS99-1 ADDED<br>R646 270 → 220<br>R647 680 → 750<br>R718 150 → 100<br>R719 510 → 820<br>R729 470 → 680<br>R739 1500 →8200<br>R741 470 → 680<br>R760 10 ADDED<br>R761 10 ADDED | S/N 10928 ~ |
| *4 | DELETED<br>R501, R522<br>ADDED<br>R692, R693, R694, R695<br>CHANGE<br>C639 20pF → 0.047<br>R645 300 → 510 | S/N 10948 ~ |

[ ]; RECORDER ONLY
(( )); DT PLAYER ONLY

EQ-28

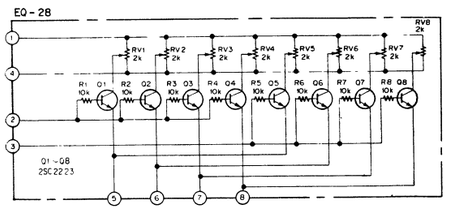


# DM-56P (2/2)

**1-622-545-32,33.34**

**BVW-60P BVW-70P**
**BVW-65P BVW-75P**
**BVW-95P BVW-96P**

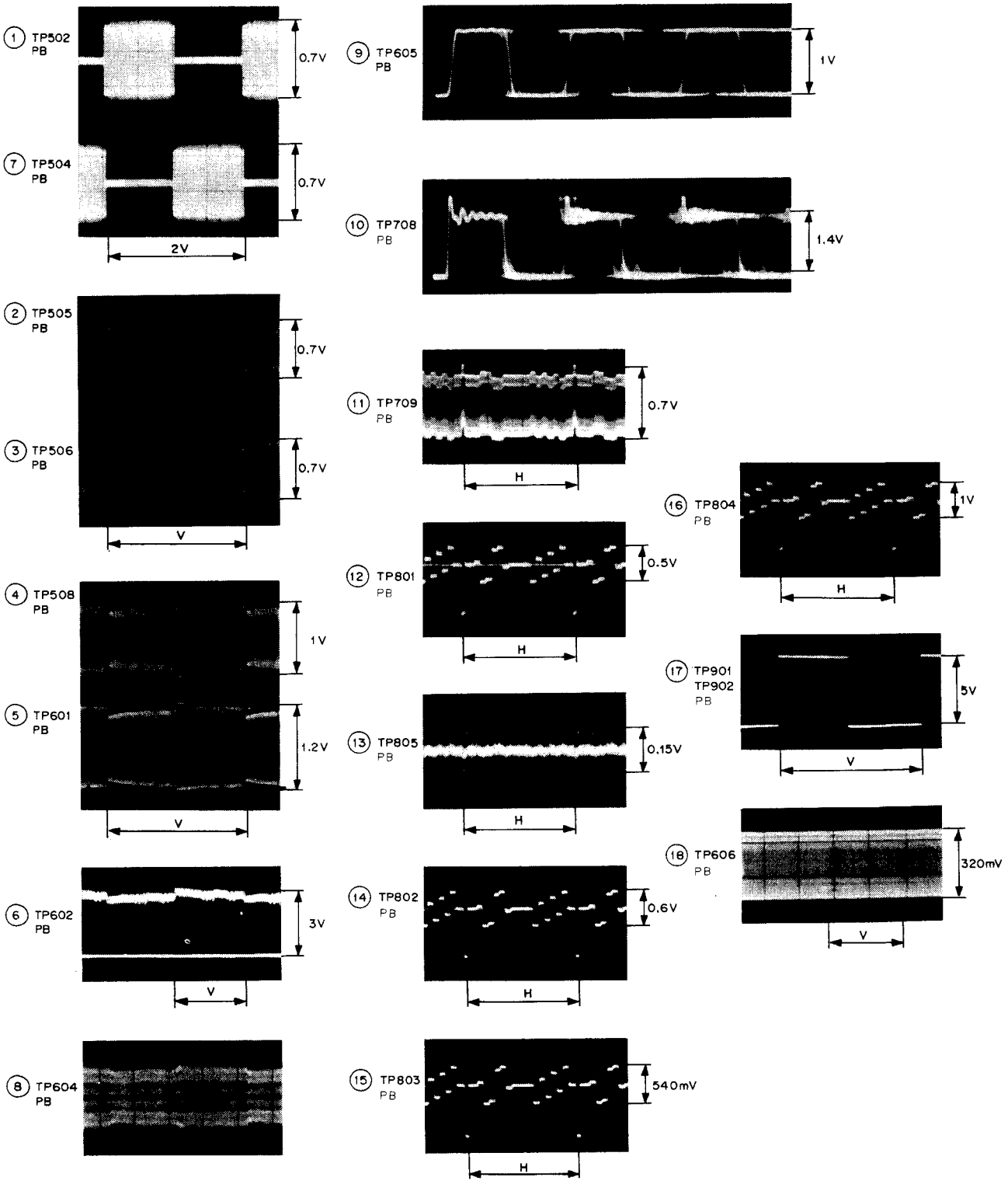
1 TP502 PB
0.7V
7 TP504 PB
0.7V
2V
2 TP505 PB
0.7V
3 TP506 PB
0.7V
V
4 TP508 PB
1V
5 TP601 PB
1.2V
V
6 TP602 PB
3V
V
8 TP604 PB
9 TP605 PB
1V
10 TP708 PB
1.4V
11 TP709 PB
0.7V
H
12 TP801 PB
0.5V
H
13 TP805 PB
0.15V
H
14 TP802 PB
0.6V
H
15 TP803 PB
540mV
H
16 TP804 PB
1V
H
17 TP901 TP902 PB
5V
V
18 TP606 PB
320mV
V

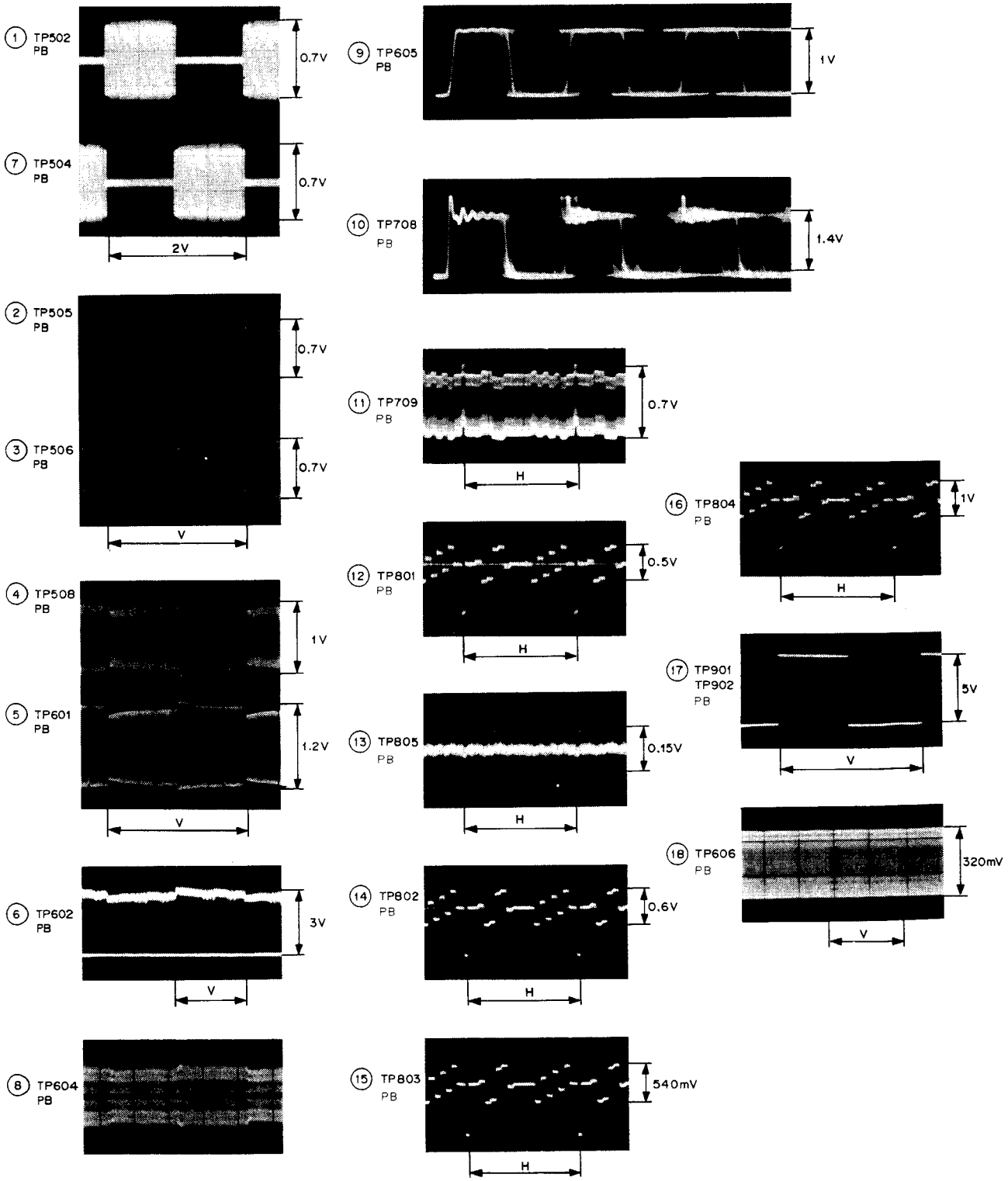
① TP502 PB
0.7V
⑦ TP504 PB
0.7V
2V
② TP505 PB
0.7V
③ TP506 PB
0.7V
V
④ TP508 PB
1V
⑤ TP601 PB
1.2V
V
⑥ TP602 PB
3V
V
⑧ TP604 PB
⑨ TP605 PB
1V
⑩ TP708 PB
1.4V
⑪ TP709 PB
0.7V
H
⑫ TP801 PB
0.5V
H
⑬ TP805 PB
0.15V
H
⑭ TP802 PB
0.6V
H
⑮ TP803 PB
540mV
H
⑯ TP804 PB
1V
H
⑰ TP901 TP902 PB
5V
V
⑱ TP606 PB
320mV
V

TBC-7P (1/3) TBC-7P

# TBC-7P (1/3); A/D CONVERTER

S/N 10001 through 10270

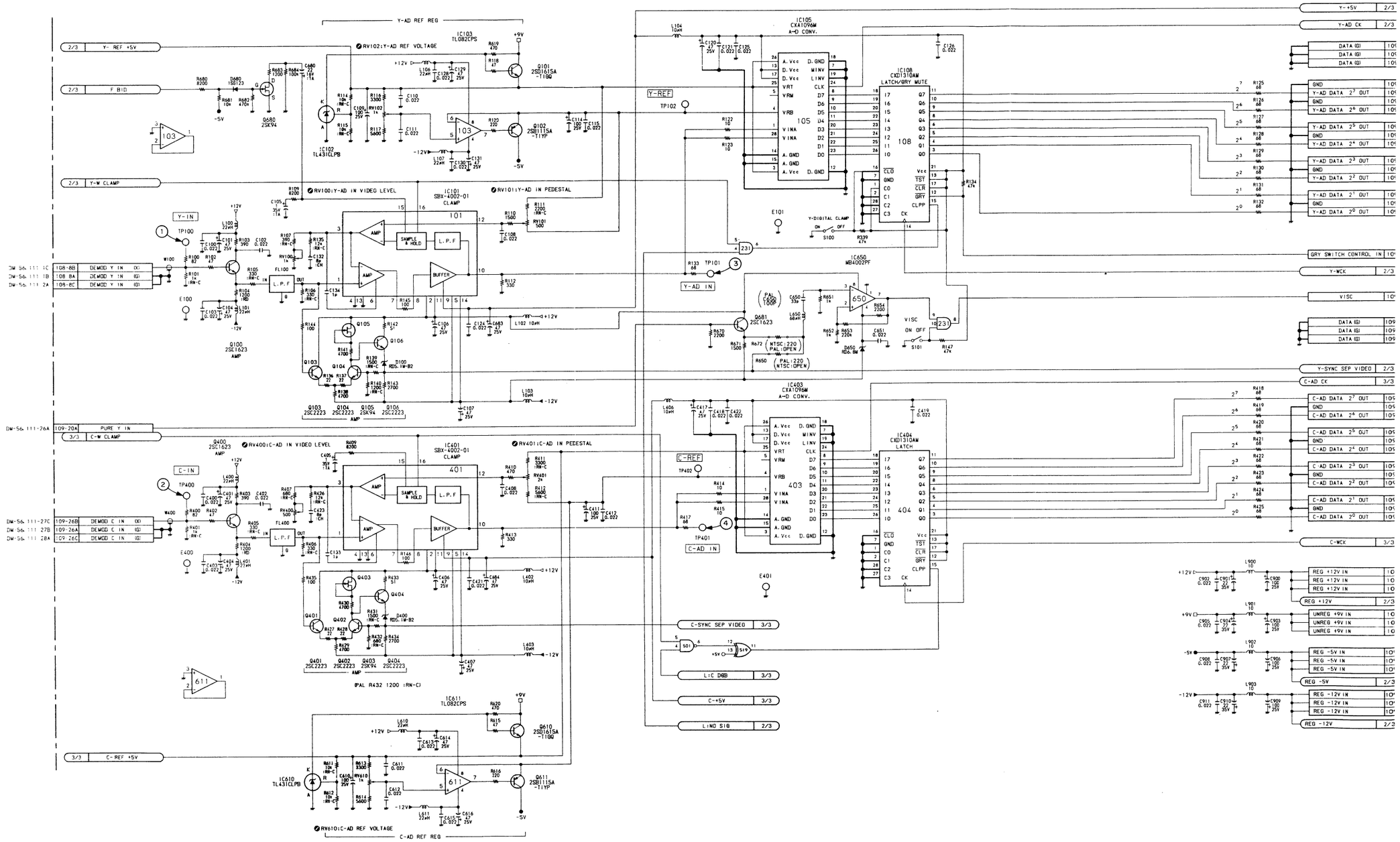


16-22 (a)

16-23 (a)

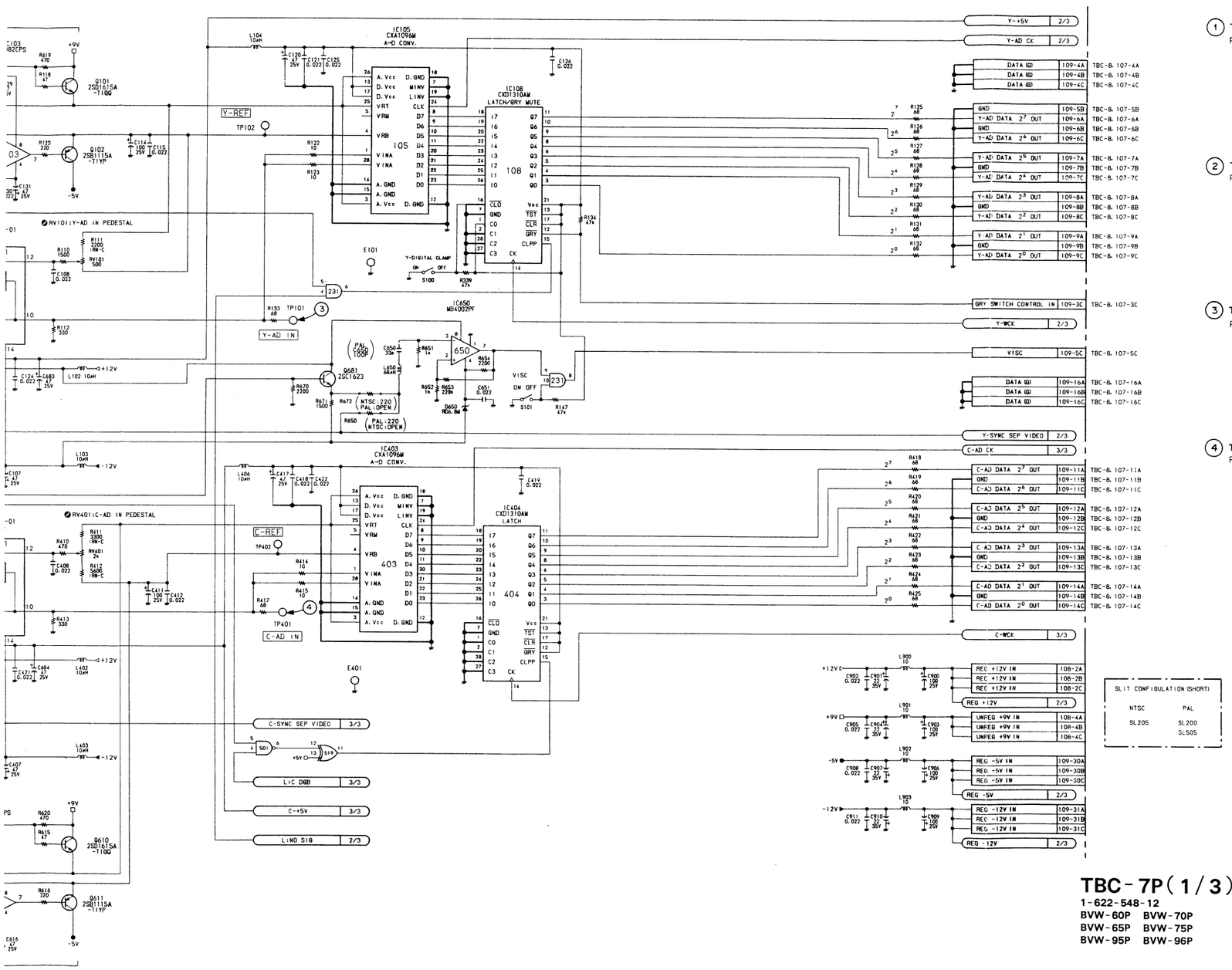


1 TP100 PB — 1V, H

2 TP400 PB — 0.64V, H

3 TP101 PB — 2.1V, H

4 TP401 PB — 1.35V, H

**TBC-7P(1/3)**
1-622-548-12
BVW-60P BVW-70P
BVW-65P BVW-75P
BVW-95P BVW-96P

16-23 (a)

16-24 (a)

E F G H I J K L

# TBC-7P (1/3); A/D CONVERTER

S/N 10271 through 10712

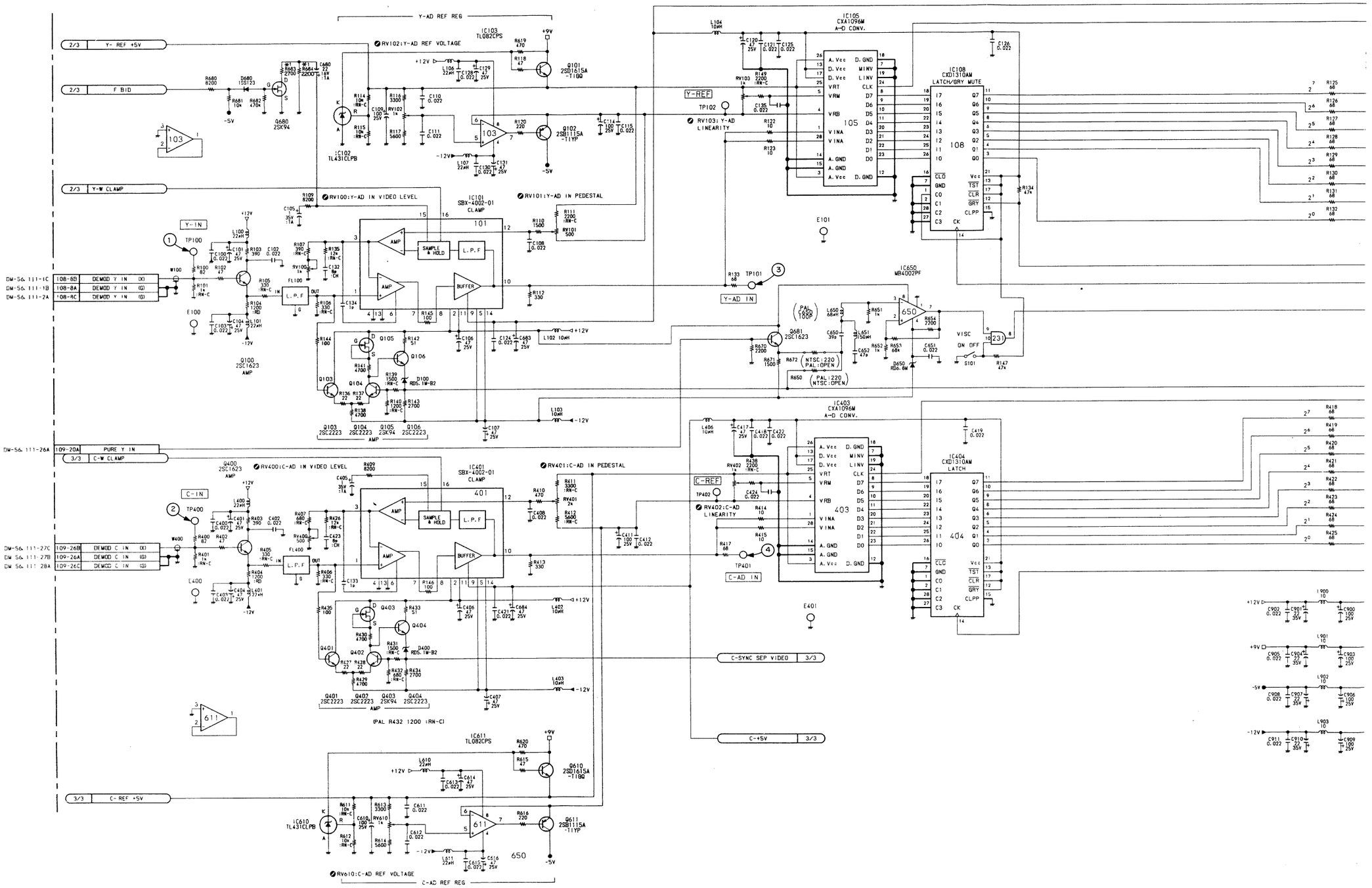


16-22 (b)

16-23 (b)

A B C D E F G H

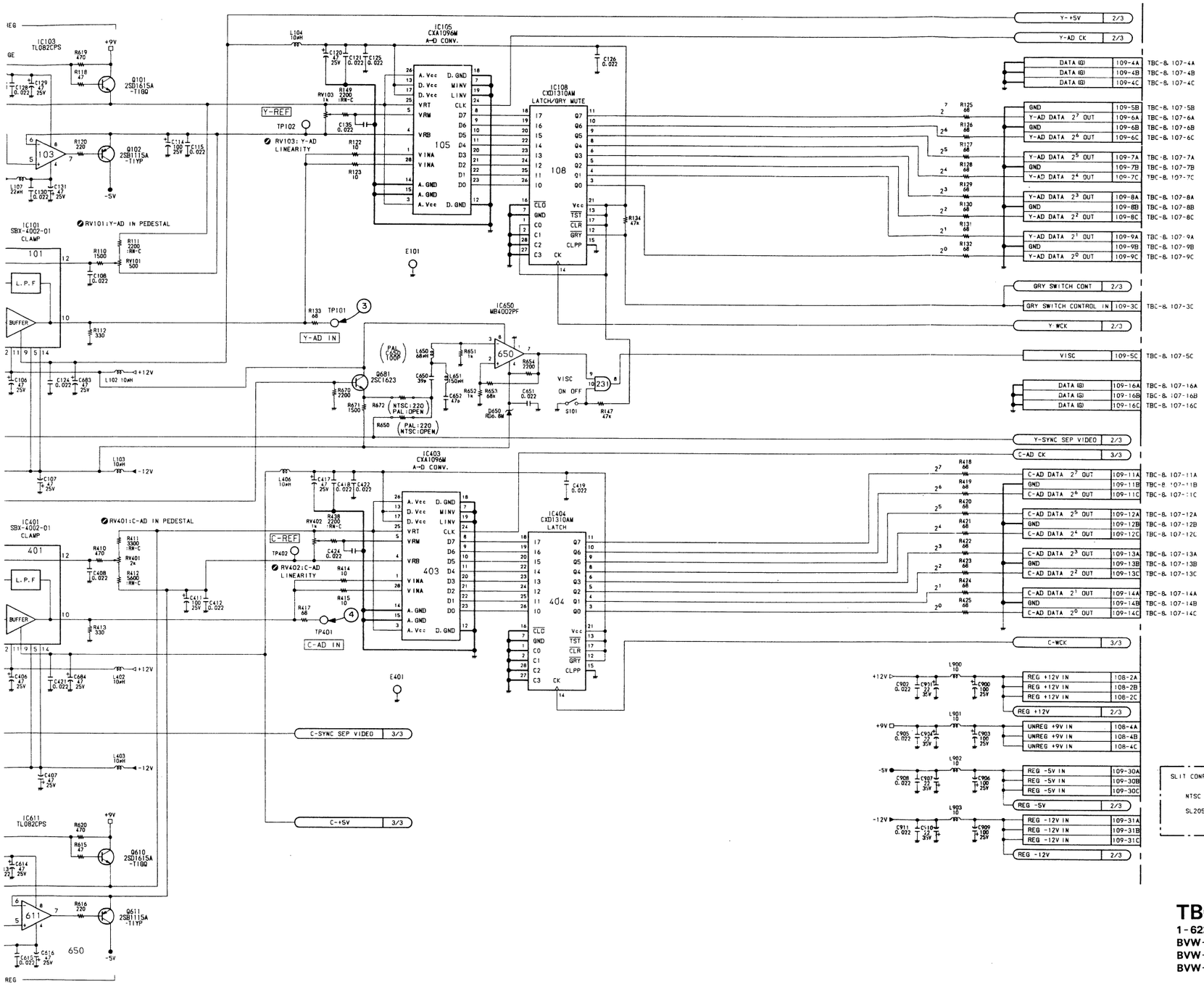


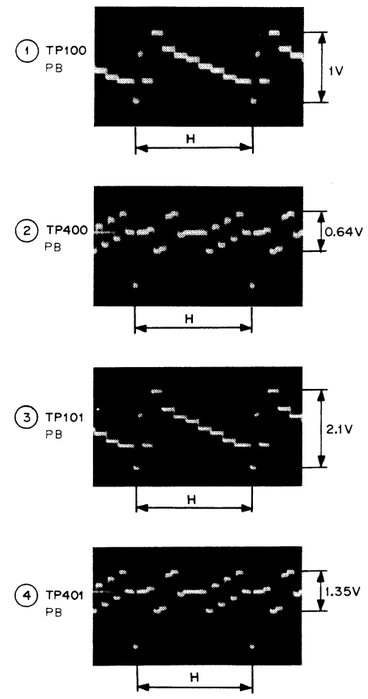


**TBC-7P(1/3)**
**1-622-548-13**
**BVW-60P BVW-70P**
**BVW-65P BVW-75P**
**BVW-95P BVW-96P**

TBC-7D (1/3) TBC-7D (

# TBC-7D (1/3); A/D CONVERTER

S/N 10713 and higher

NOTE

| MARK | CHANGE INFORMATION | SERIAL NO. |
|---|---|---|
| *1 | ADDED C136, C425, R150, R439 | S/N 11083 ~ |

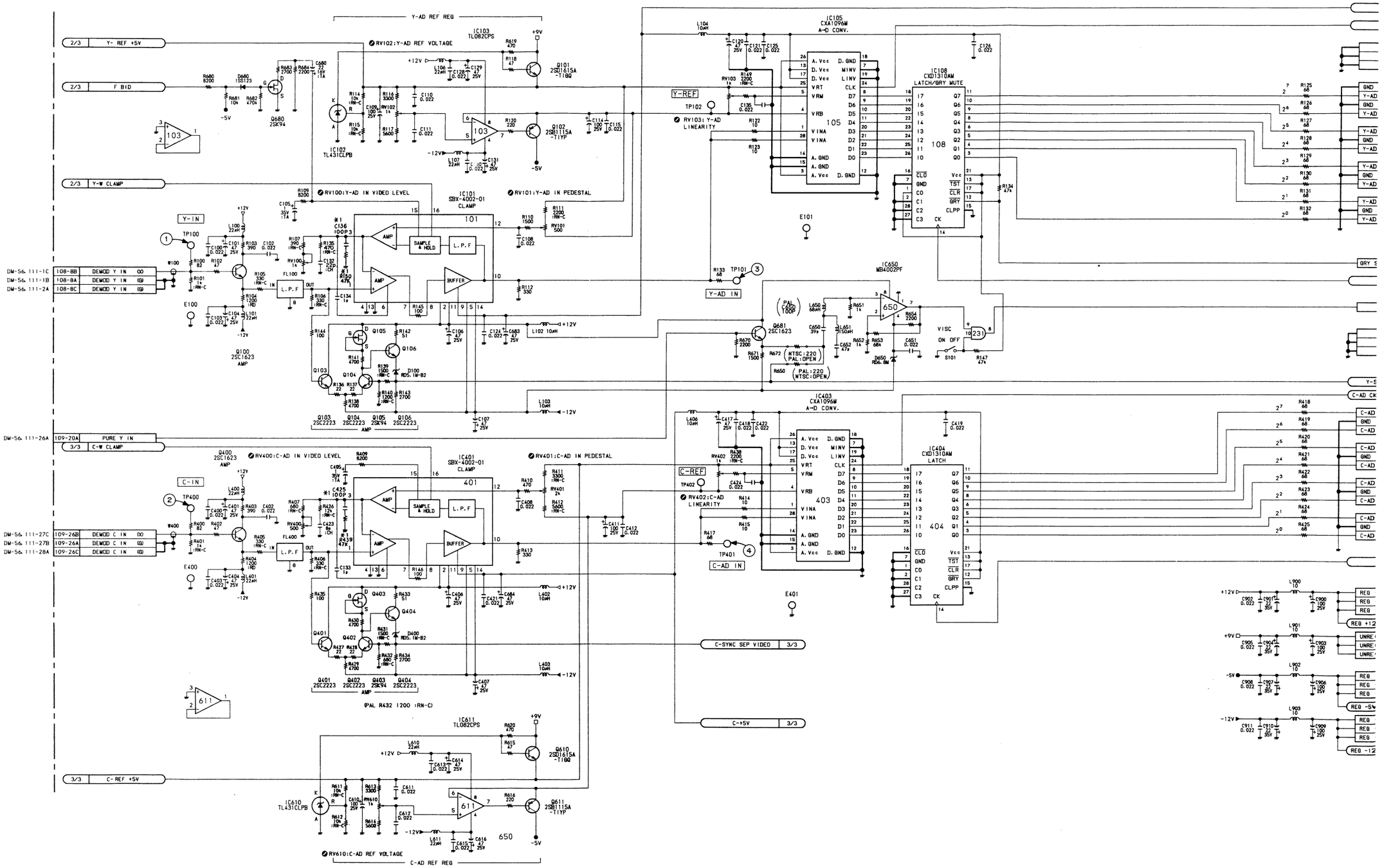


16-22 (c)

16-23 (c)

A B C D E F G H

| | SERIAL NO. |
|---|---|
| 9 | S/N 11083 ～ |

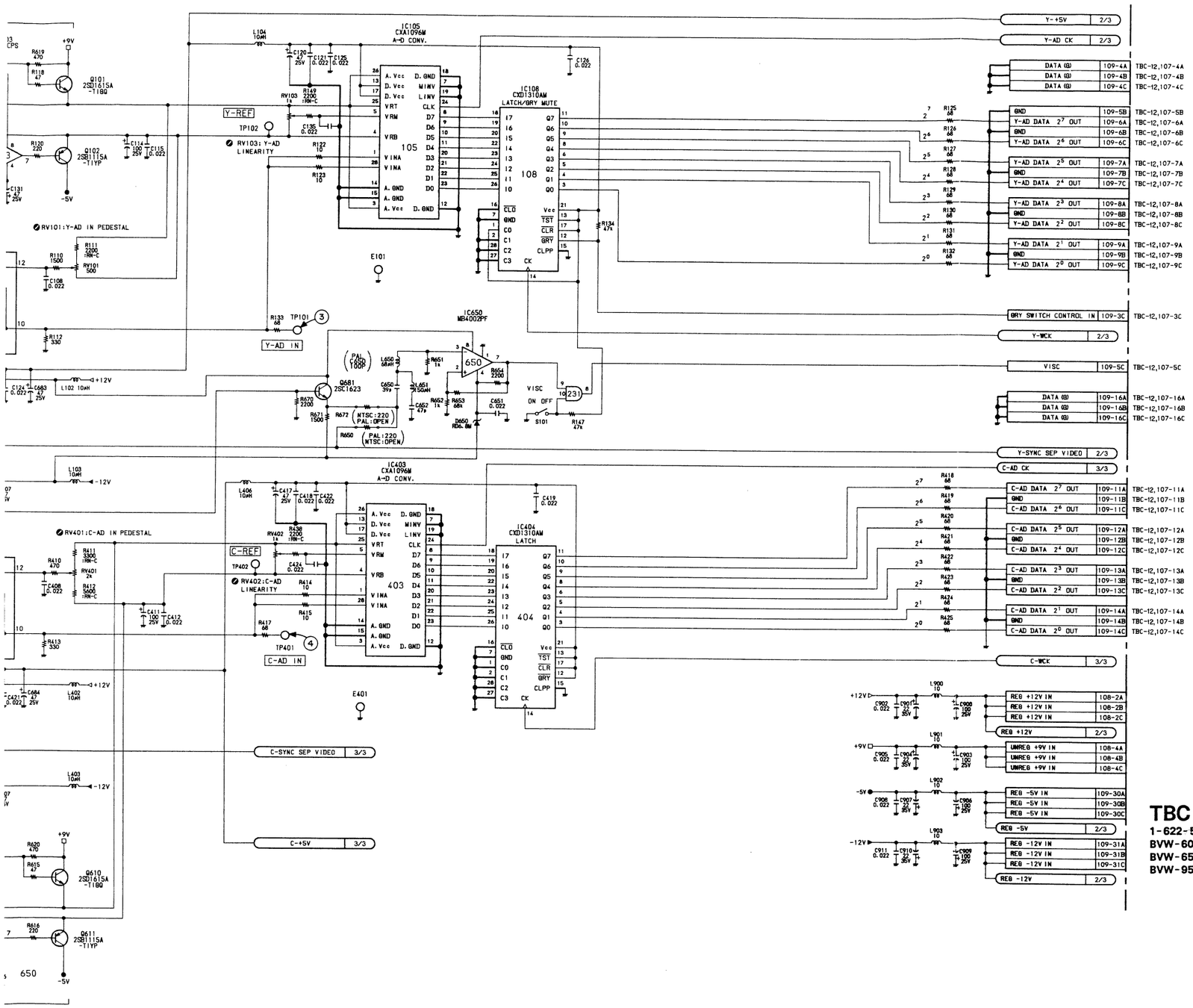


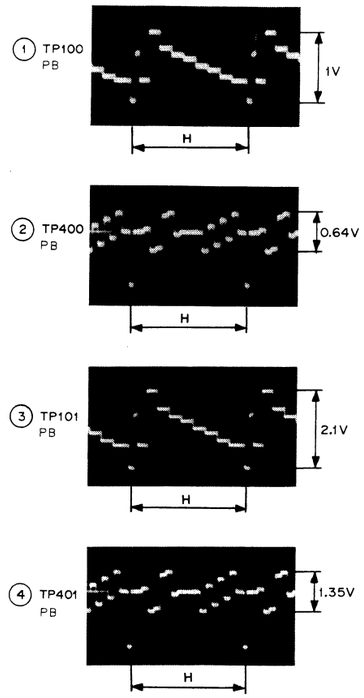


# TBC-7D(1/3)

**1-622-548-14, 15**

**BVW-60P BVW-70P**
**BVW-65P BVW-75P**
**BVW-95P BVW-96P**

16-23 (c)

16-24 (c)

E F G H I J K L

# TBC-7P (2/3); Y WRITE CLOCK GENERATOR

S/N 10001 through 10270

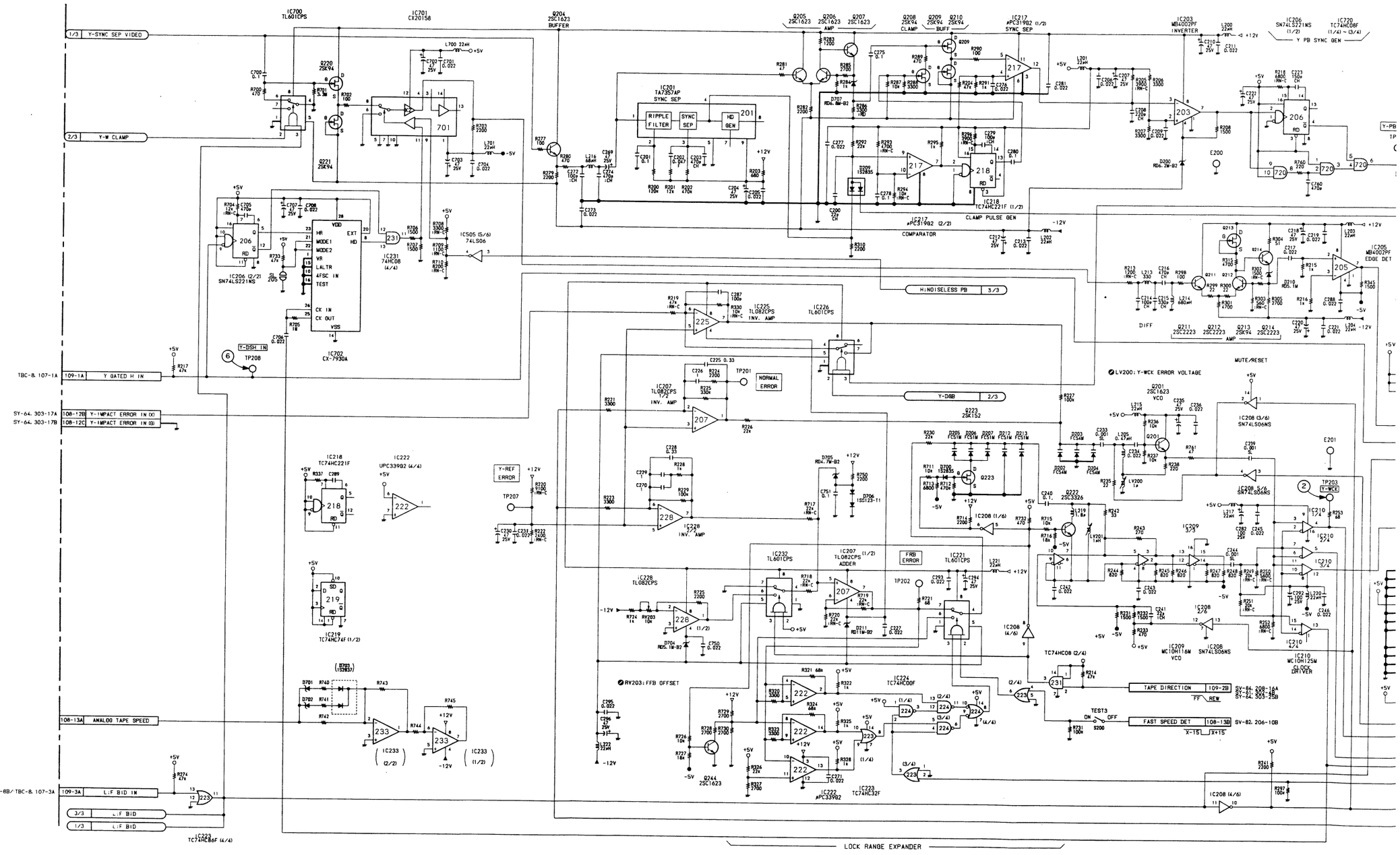


16-29 (a)

16-30 (a)

A B C D E F G H

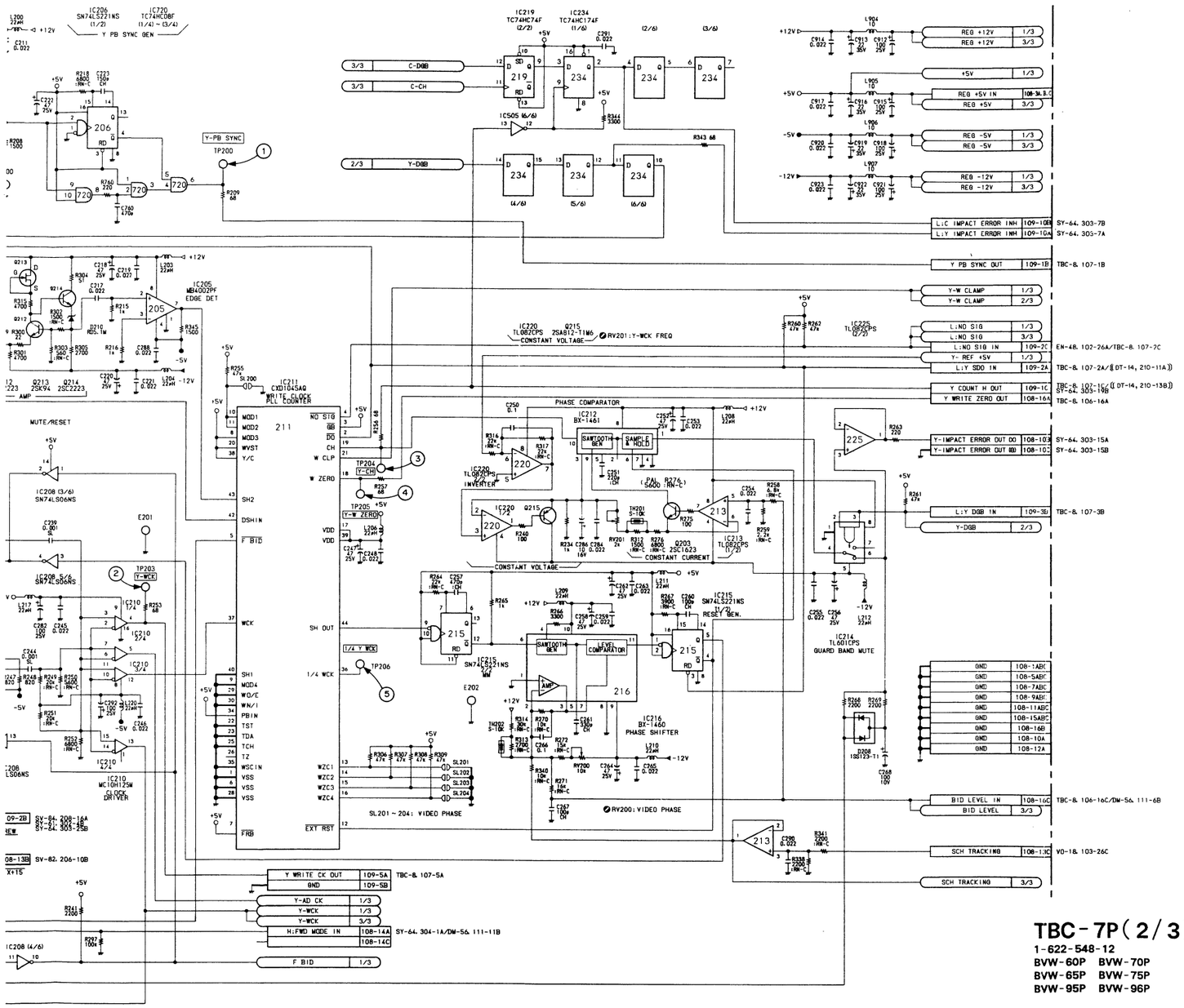


((  )) ; DT PLAYER ONLY

## TBC-7P (2/3)

**1-622-548-12**

**BVW-60P BVW-70P**
**BVW-65P BVW-75P**
**BVW-95P BVW-96P**

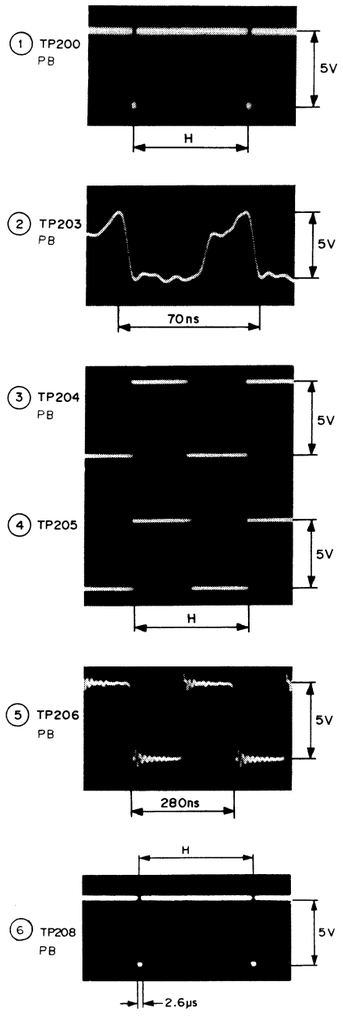

# TBC-7P (2/3); Y WRITE CLOCK GENERATOR

S/N 10271 through 10712

NOTE

| MARK | CHANGE INFORMATION | SERIAL NO. |
|---|---|---|
| *1 | R254 8200 → 68k<br>R348 1800 → 18k | S/N 10456 ～ |

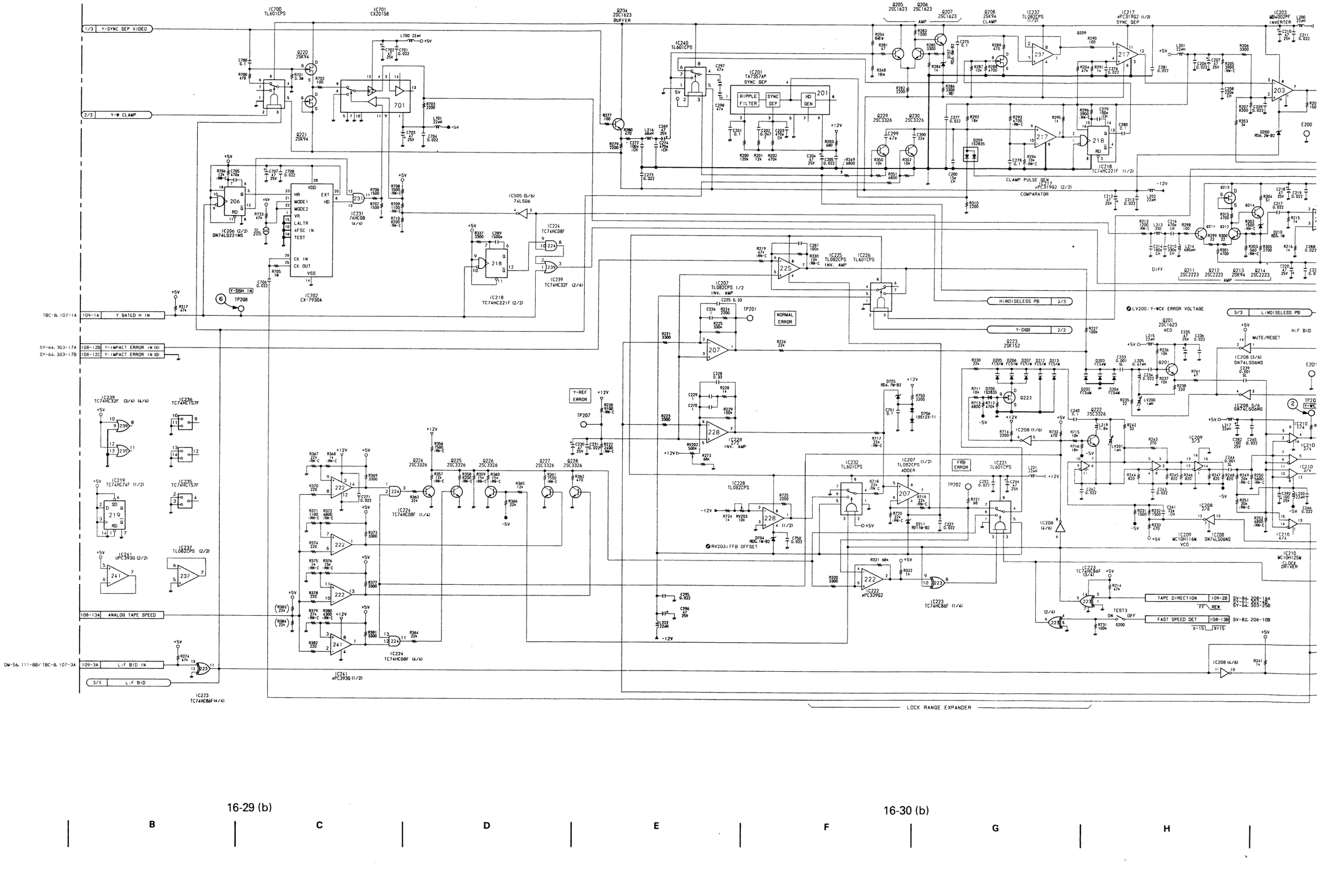


16-29 (b)　　16-30 (b)

A　B　C　D　E　F　G　H

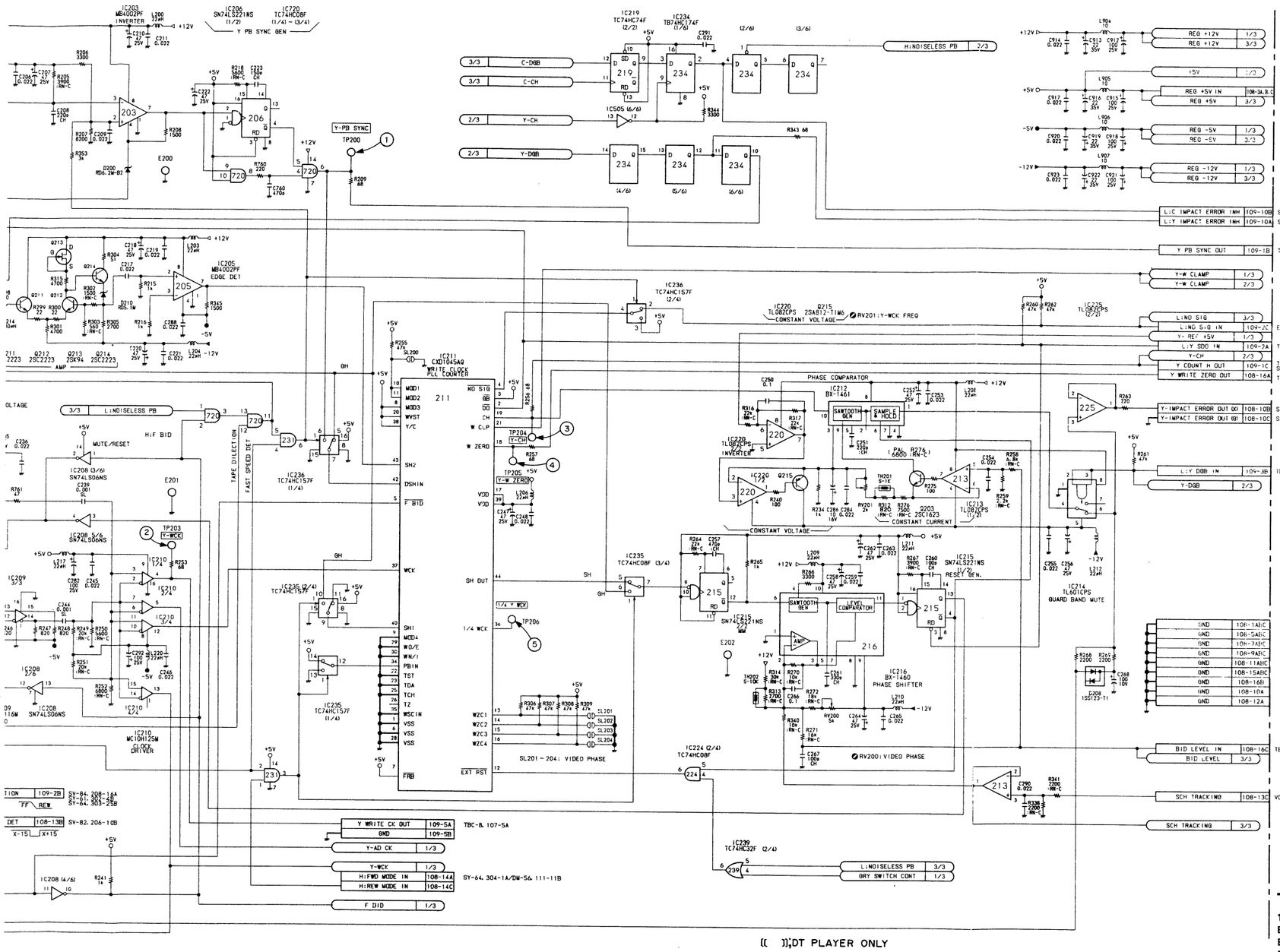


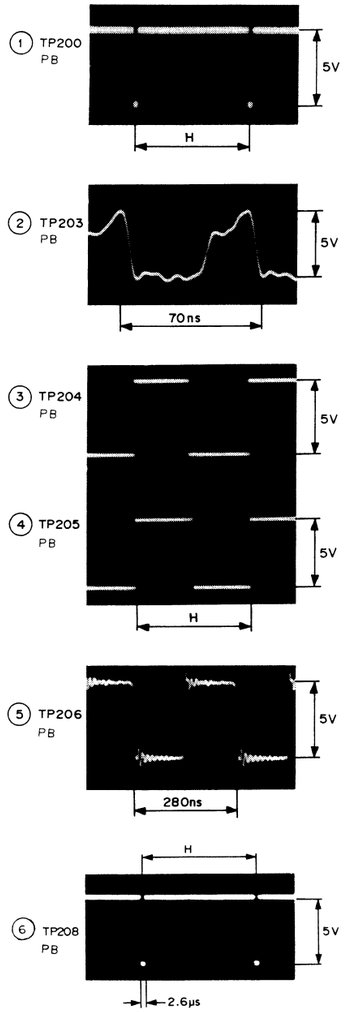


**TBC-7P(2/3)**
1-622-548-13
BVW-60P BVW-70P
BVW-65P BVW-75P
BVW-95P BVW-96P

# TBC-7D (2/3); Y WRITE CLOCK GENERATOR

S/N 10713 and higher

NOTE

| MARK | CHANGE INFORMATION | SERIAL NO. |
|---|---|---|
| *1 | R733 47k → 10k | S/N 11083 ～ |

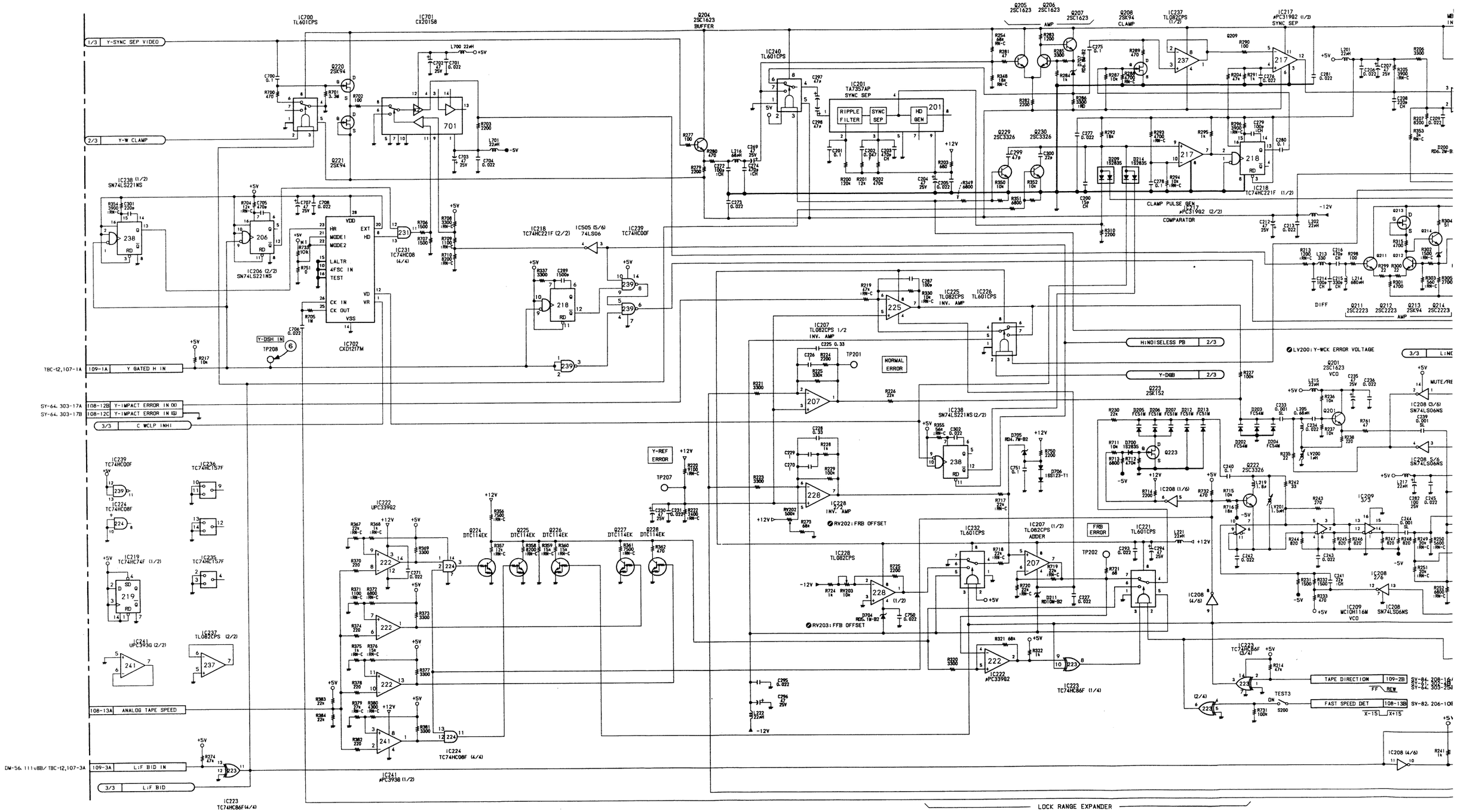


16-29 (c)　　16-30 (c)

A　B　C　D　E　F　G　H

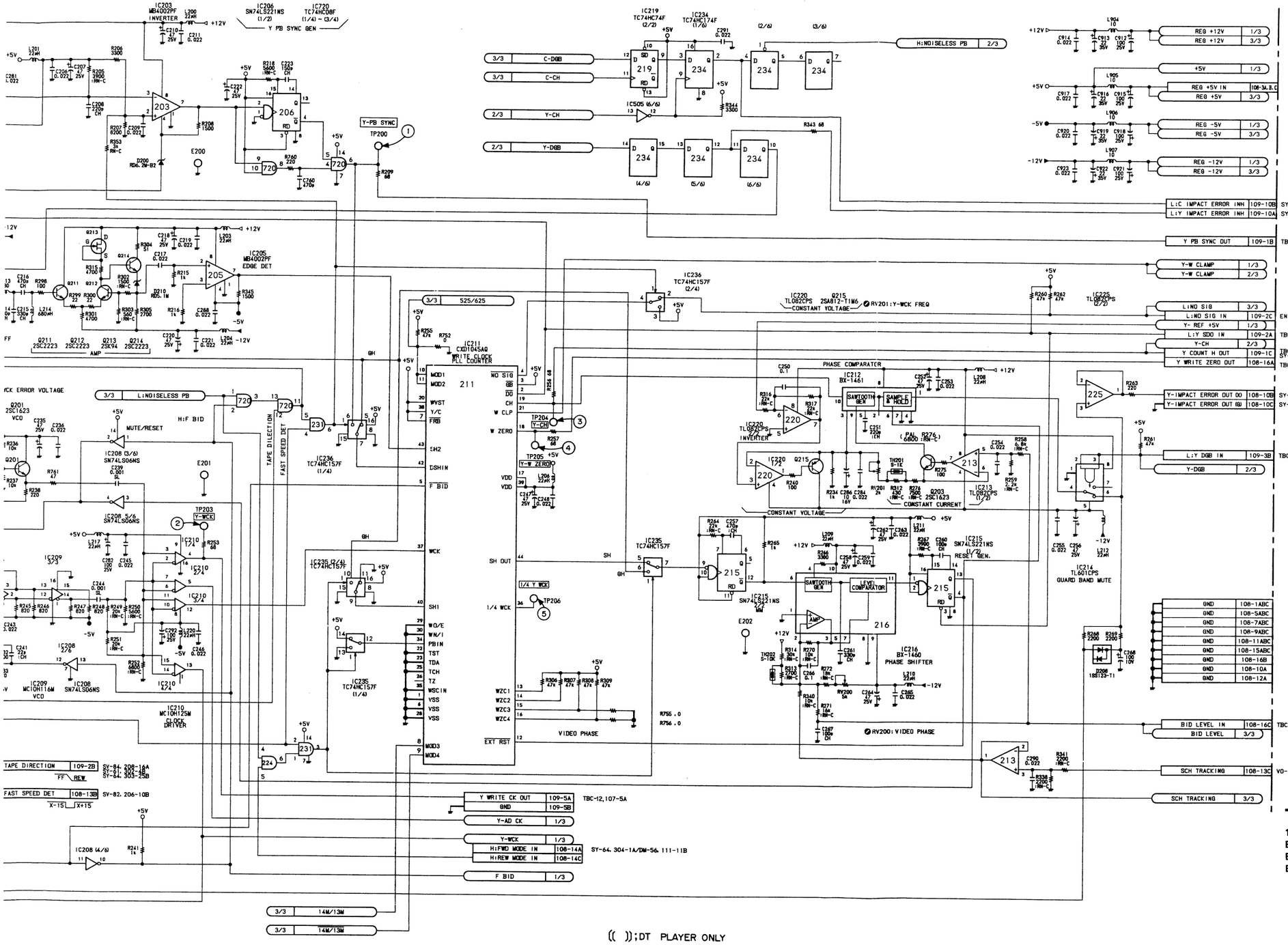


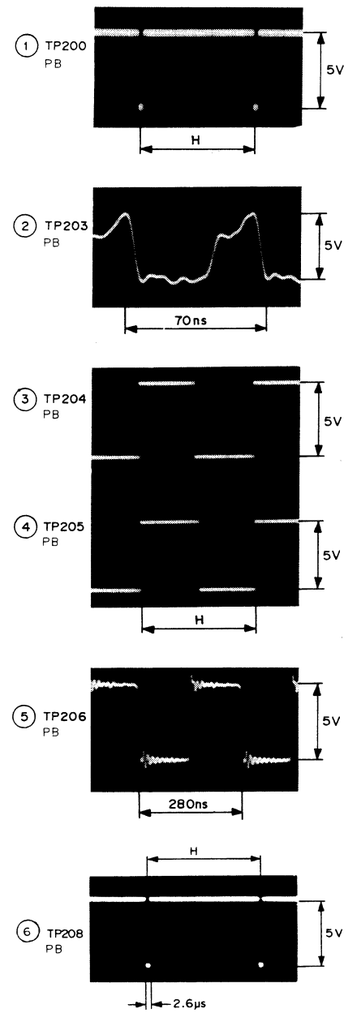


**TBC-7D(2/3)**
**1-622-548-14, 15**
**BVW-60P BVW-70P**
**BVW-65P BVW-75P**
**BVW-95P BVW-96P**

TBC-7P (3/3), SW-261 TBC-7P

# TBC-7P (3/3); C WRITE CLOCK GENERATOR
# SW-261; METAL/OXIDE Y/C DELAY ADJUST VOLUME

S/N 10001 through 10270

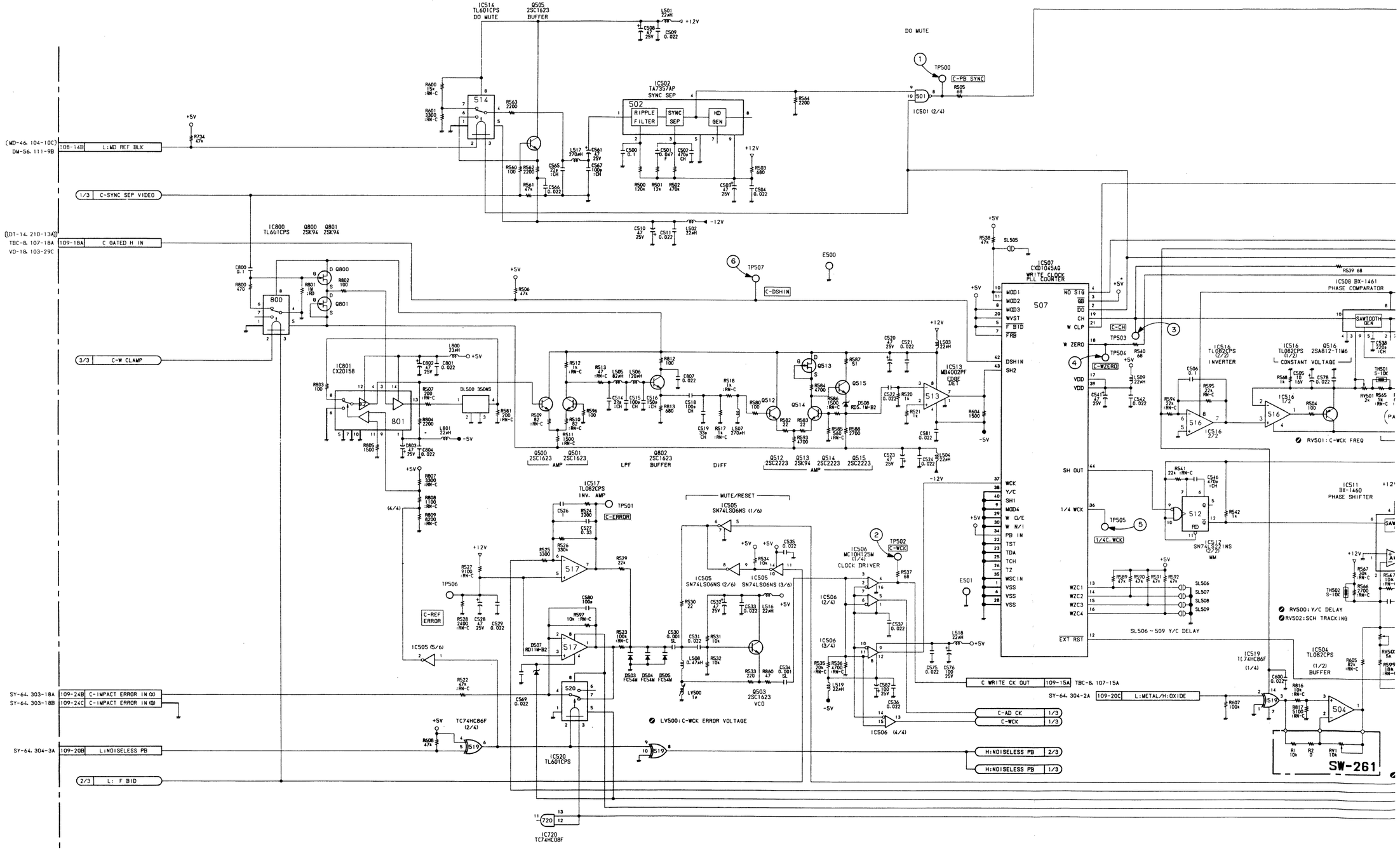


16-36 (a)

16-37 (a)

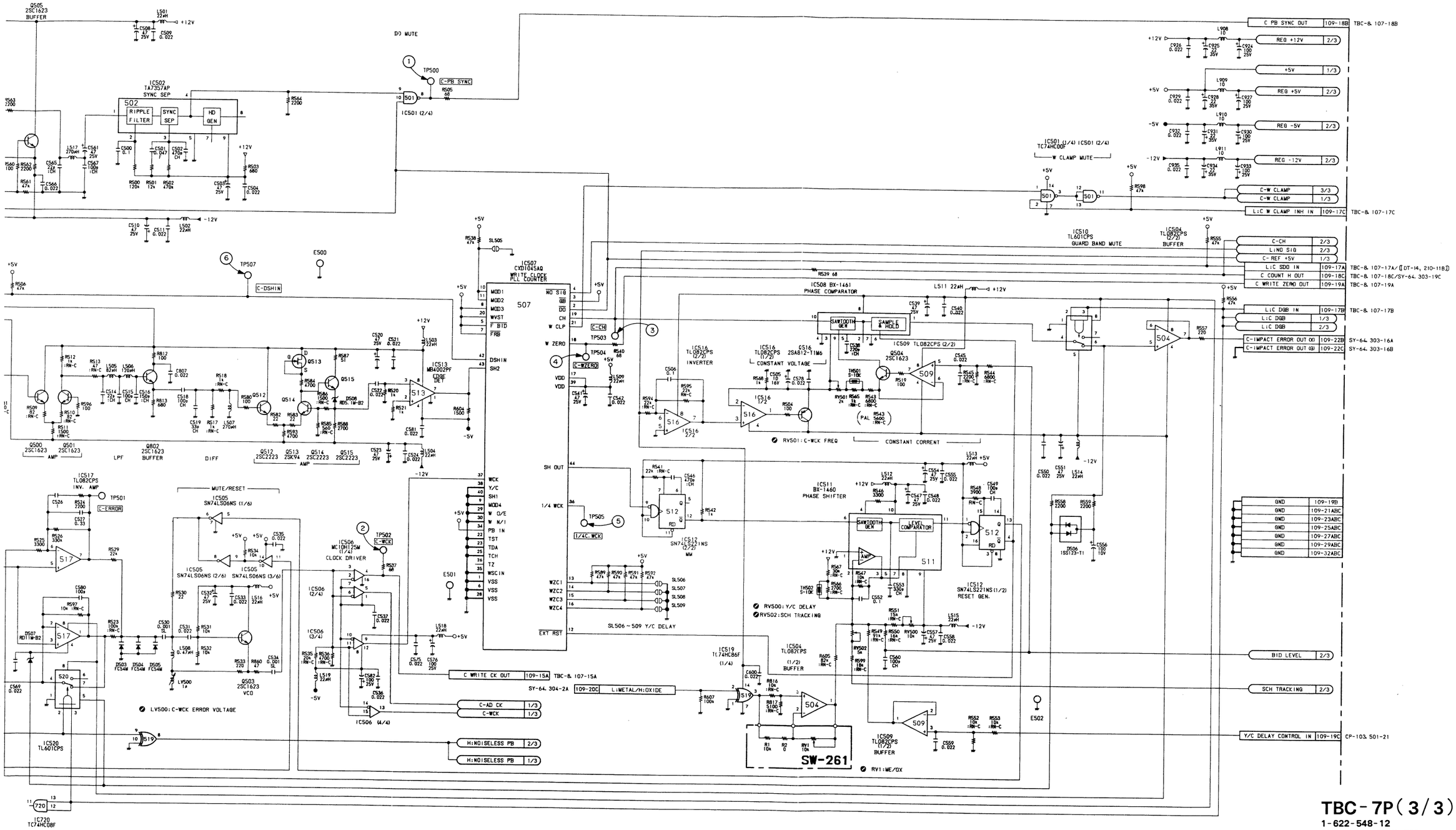
C PB SYNC OUT 109-18B TBC-8, 107-18B
REG +12V 2/3
+5V 1/3
REG +5V 2/3
REG -5V 2/3
REG -12V 2/3
C-W CLAMP 3/3
C-W CLAMP 1/3
L:C W CLAMP INH IN 109-17C TBC-8, 107-17C
C-CH 2/3
L:NO SIG 2/3
C-REF +5V 1/3
L:C SDO IN 109-17A TBC-8, 107-17A/ ([DT-14, 210-11B])
C COUNT H OUT 109-18C TBC-8, 107-18C/SY-64, 303-19C
C WRITE ZERO OUT 109-19A TBC-8, 107-19A
L:C DGB IN 109-17B TBC-8, 107-17B
L:C DGB 1/3
L:C DGB 2/3
C-IMPACT ERROR OUT (X) 109-22B SY-64, 303-16A
C-IMPACT ERROR OUT (Y) 109-22C SY-64, 303-16B
GND 109-19D
GND 109-21ABC
GND 109-23ABC
GND 109-25ABC
GND 109-27ABC
GND 109-29ABC
GND 109-32ABC
B/D LEVEL 2/3
SCH TRACKING 2/3
Y/C DELAY CONTROL IN 109-19C CP-103, 501-21
C WRITE CK OUT 109-15A TBC-8, 107-15A
SY-64, 304-2A 109-20C L:METAL/H:OXIDE
C-AD CK 1/3
C-WCK 1/3
H:NOISELESS PB 2/3
H:NOISELESS PB 1/3
IC501 (2/4) IC501 (2/4) TC74HC00F
W CLAMP MUTE
IC510 TL601CPS GUARD BAND MUTE
IC504 TL082CPS (2/2) BUFFER
IC508 BX-1461 PHASE COMPARATOR
IC509 TL082CPS (2/2)
IC516 TL082CPS (1/2) INVERTER
IC516 TL082CPS (1/2) CONSTANT VOLTAGE
IC516 2SA812-T1M6
IC516 272
IC511 BX-1460 PHASE SHIFTER
IC512 SN74LS221NS (1/2) RESET GEN.
IC512 SN74LS221NS (1/2)
IC519 TL74HC86F (1/4)
IC519 TL082CPS (1/2) BUFFER
IC509 TL082CPS (1/2) BUFFER
IC517 TL082CPS INV. AMP
IC505 SN74LS06NS (1/6)
IC505 SN74LS06NS (2/6)
IC505 SN74LS06NS (3/6)
IC506 MC10H125M (1/4) CLOCK DRIVER
IC506 (2/4)
IC506 (3/4)
IC506 (4/4)
IC507 CXD1045AQ WRITE CLOCK PLL COUNTER
IC513 MB4002PF
IC520 TL601CPS
IC720 TC74HC08F
TP500 C-PB SYNC
TP501 C-ERROR
TP502 C-WCK
TP503 C-CH
TP504 C-WZERO
TP505 1/4C.WCK
TP507 C-DSHIN
DO MUTE
MUTE/RESET
SL505
SL506 ~ 509 Y/C DELAY
LV500: C-WCK ERROR VOLTAGE
RV501: C-WCK FREQ
CONSTANT CORRENT
RV500: Y/C DELAY
RV502: SCH TRACKING
RV1: WE/OX
SW-261
Q500 2SC1623 AMP
Q501 2SC1623 AMP
Q802 2SC1623 BUFFER
LPF
DIFF
Q512 2SC2223 AMP
Q513 2SK94
Q514 2SC2223
Q515 2SC2223
Q503 2SC1623 VCO
Q504 2SC1623
Q505 2SC1623 BUFFER
Q506 2SC1623 BUFFER
Q507 RDT1M-B2
D503 FCS4M
D504 FCS4M
D505 FCS4M
D506 1SS123-T1
D507 RDT1M-B2
DS06 RDS.1M-B2
ES00
ES01
ES02
S01
S02
S03
S04
S05
S06
S07
S08
S09
S10
S11
S12
S13
S14
S15
S16
S17
S18
S19
S20
S21
S22
S23
S24
S25
S26
S27
S28
S29
S30
S31
S32
S33
S34
S35
S36
S37
S38
S39
S40

TBC-7P (3/3) TBC-7P

## TBC-7P (3/3); C WRITE CLOCK GENERATOR

S/N 10271 through 10712

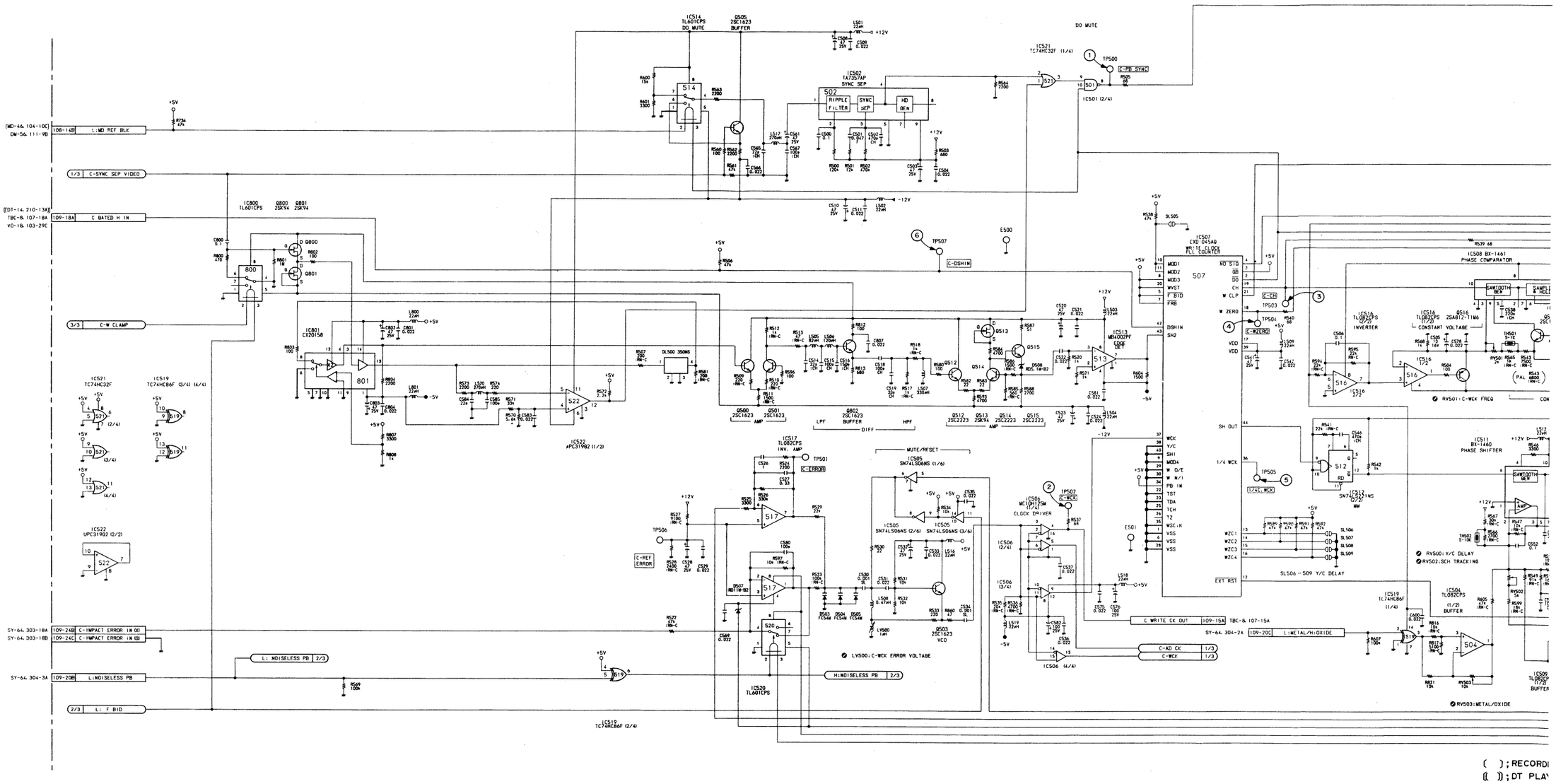


16-36 (b)

16-37 (b)



A B C D E F G H

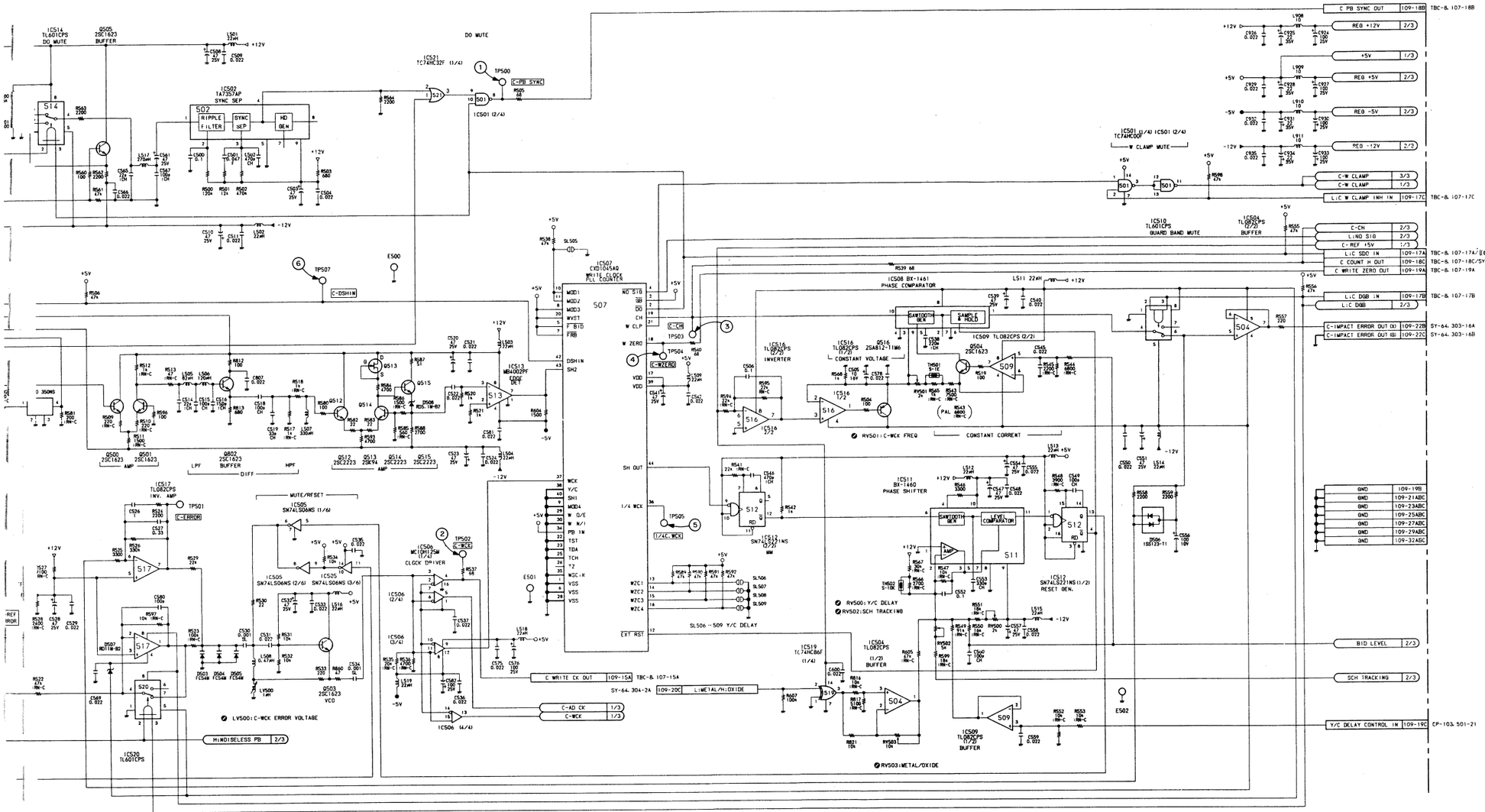


**TBC-7P(3/3)**
1-622-548-13
BVW-60P BVW-70P
BVW-65P BVW-75P
BVW-95P BVW-96P

TBC-7D (3/3)

# TBC-7D (3/3) ; C WRITE CLOCK GENERATOR

S/N 10713 and higher

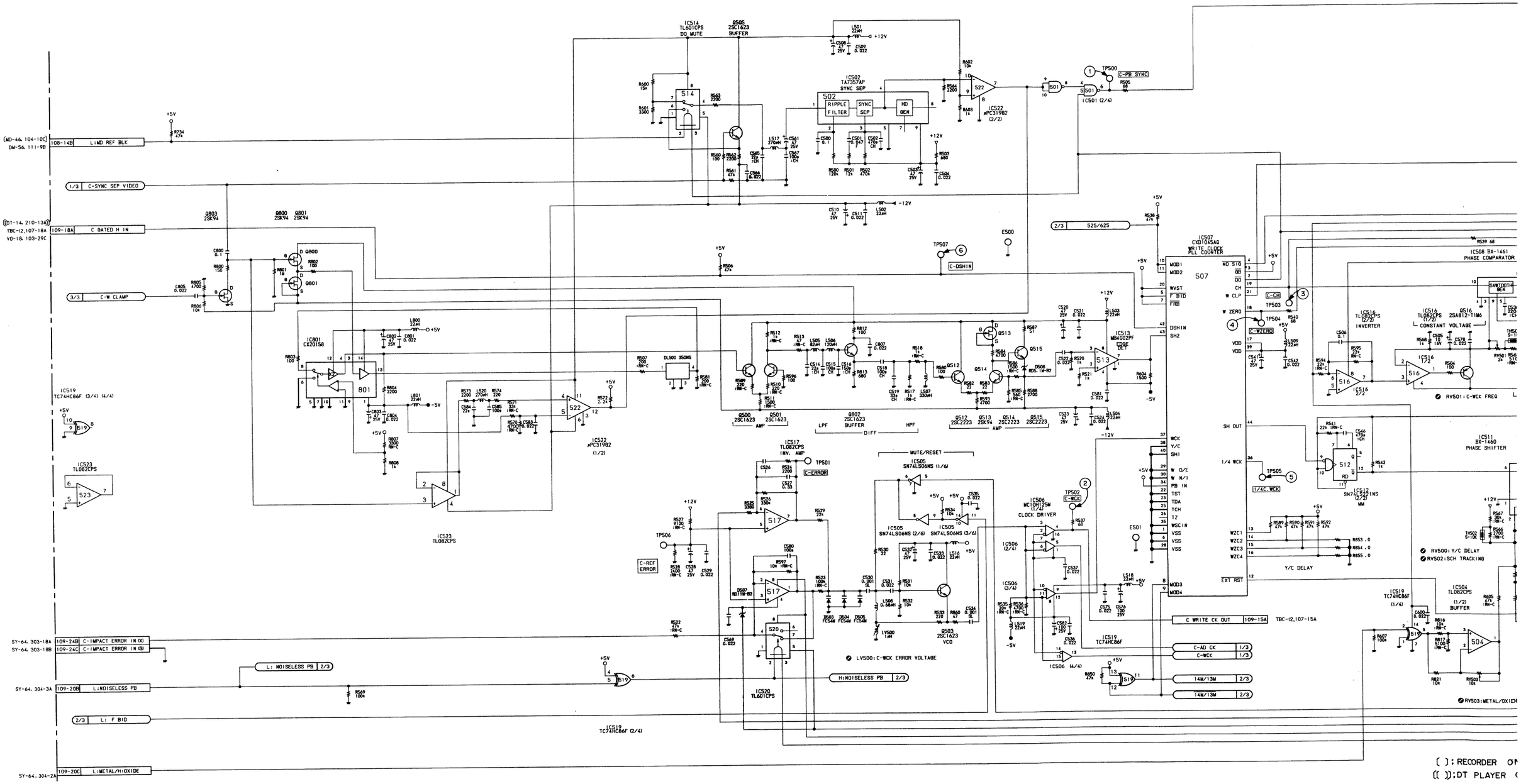


16-36 (c)

16-37 (c)

A B C D E F G H

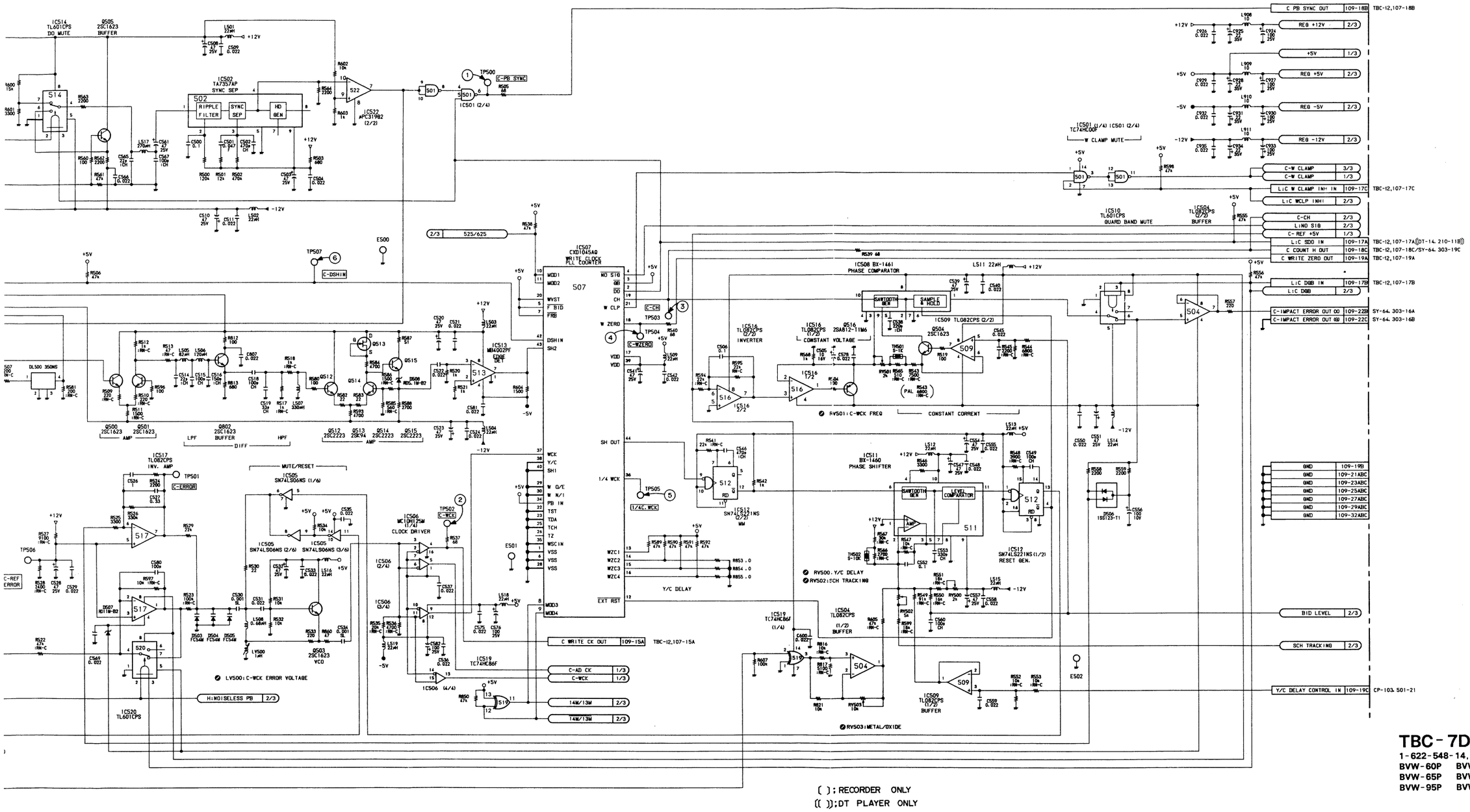


( ); RECORDER ONLY
(( )); DT PLAYER ONLY

**TBC-7D (3/3)**
1-622-548-14, 15
BVW-60P BVW-70P
BVW-65P BVW-75P
BVW-95P BVW-96P

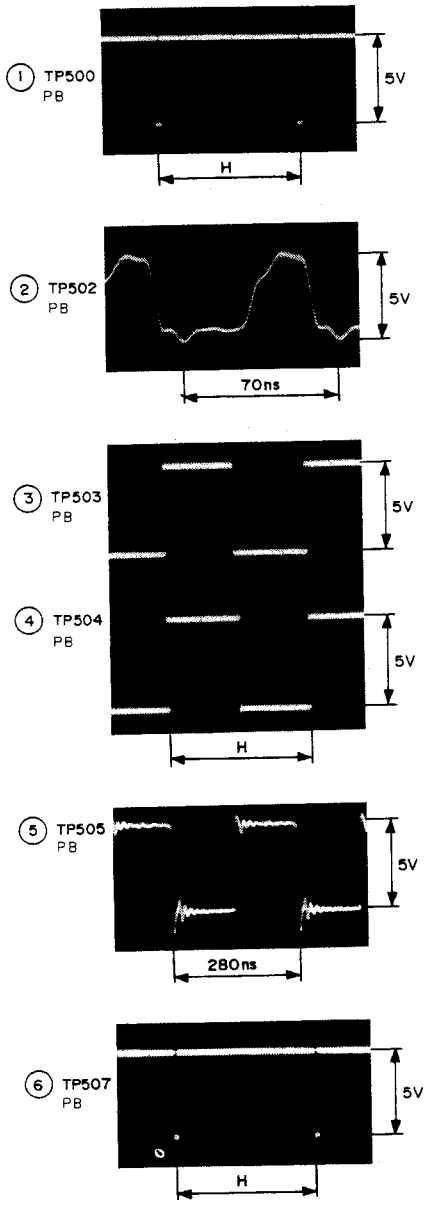
1 TP500
PB
5V
H
2 TP502
PB
5V
70ns
3 TP503
PB
5V
4 TP504
PB
5V
H
5 TP505
PB
5V
280ns
6 TP507
PB
5V
H

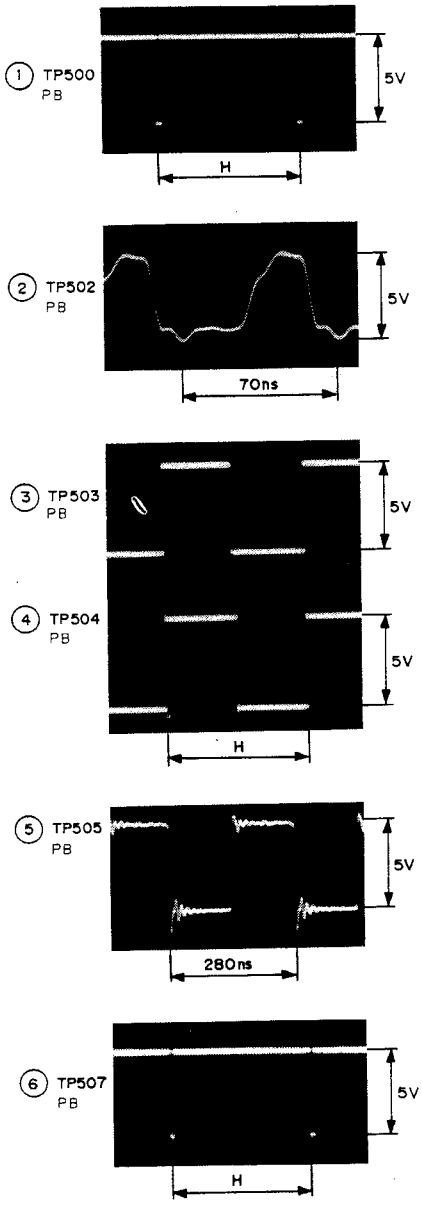
1 TP500
PB
5V
H
2 TP502
PB
5V
70ns
3 TP503
PB
5V
4 TP504
PB
5V
H
5 TP505
PB
5V
280ns
6 TP507
PB
5V
H

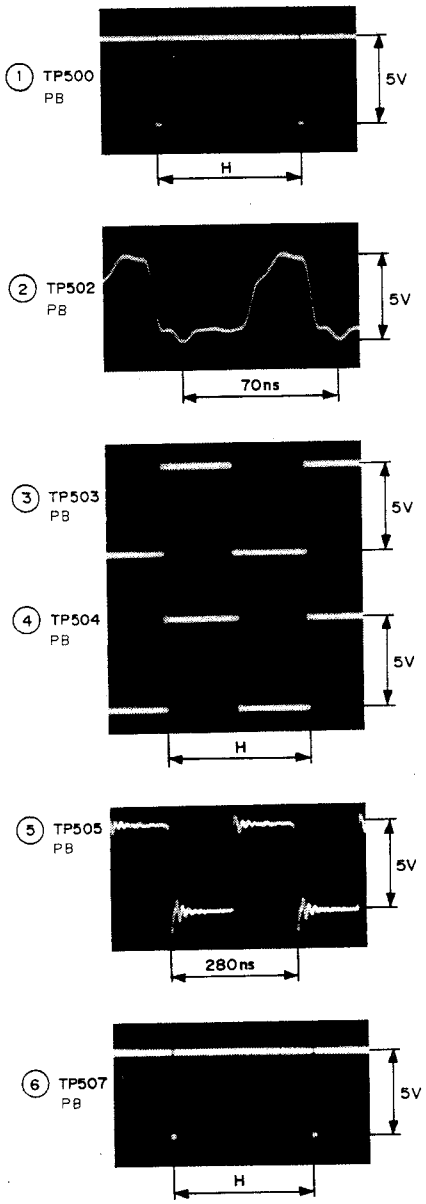
1 TP500
PB
5V
H
2 TP502
PB
5V
70ns
3 TP503
PB
5V
4 TP504
PB
5V
H
5 TP505
PB
5V
280ns
6 TP507
PB
5V
H

# TBC-8P (1/3); Y MAIN MEMORY

S/N 10001 through 10355

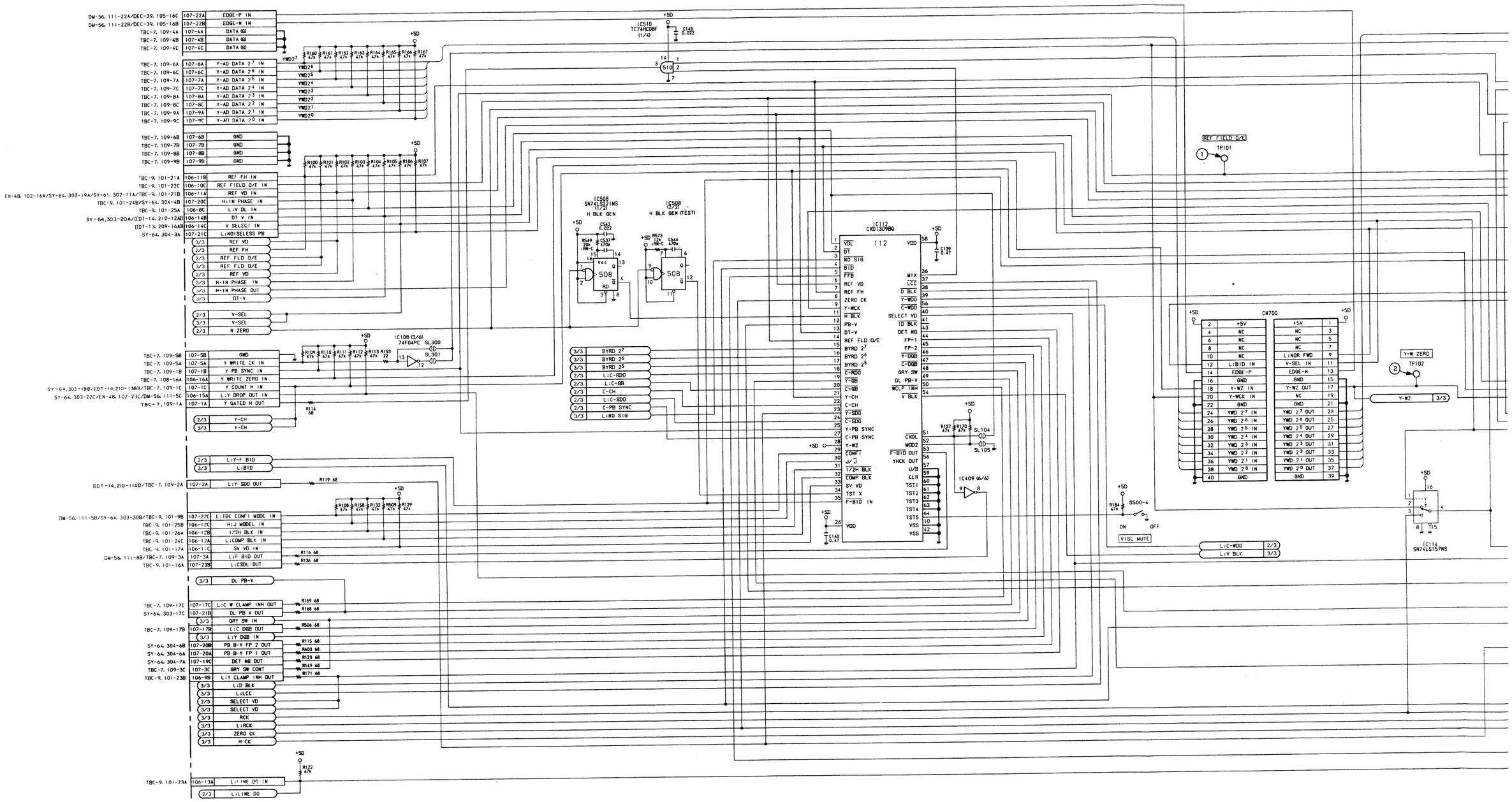


16-43 (a)

16-44 (a)

A B C D E F G H

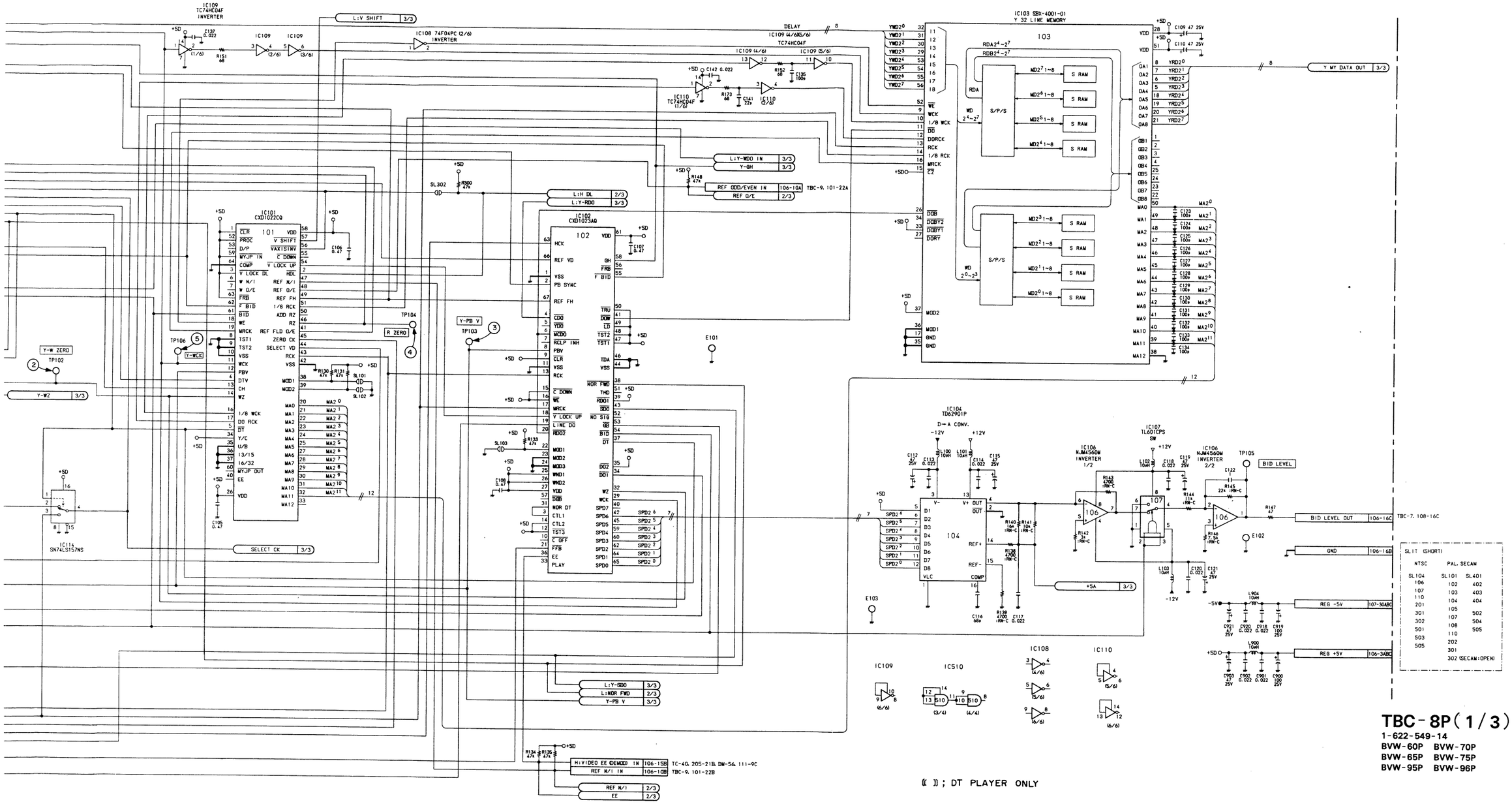


TBC-8P(1/3)

1-622-549-14

BVW-60P BVW-70P
BVW-65P BVW-75P
BVW-95P BVW-96P

( ) ; DT PLAYER ONLY

16-45 (a)

16-46 (a)

I J K L M N O P

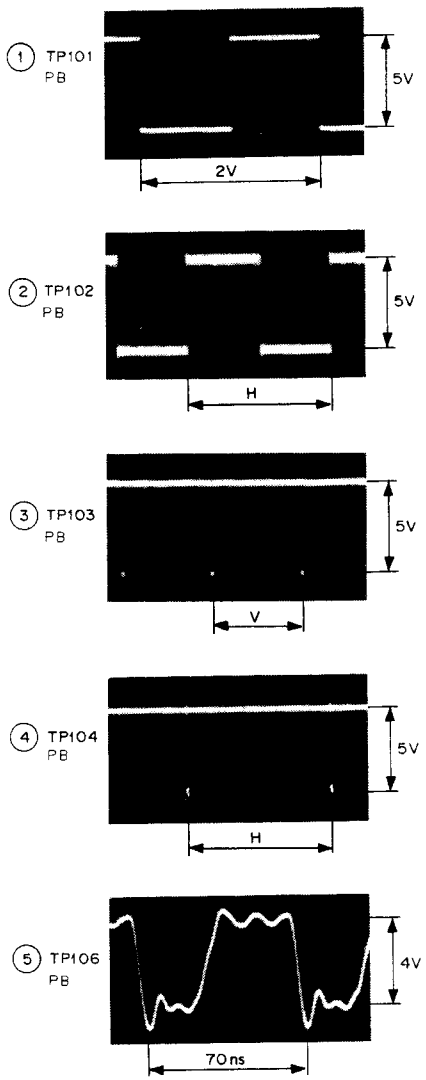
1 TP101
PB
5V
2V
2 TP102
PB
5V
H
3 TP103
PB
5V
V
4 TP104
PB
5V
H
5 TP106
PB
4V
70ns

# TBC-8P (1/3) ; Y MAIN MEMORY

S/N 10356 through 10712

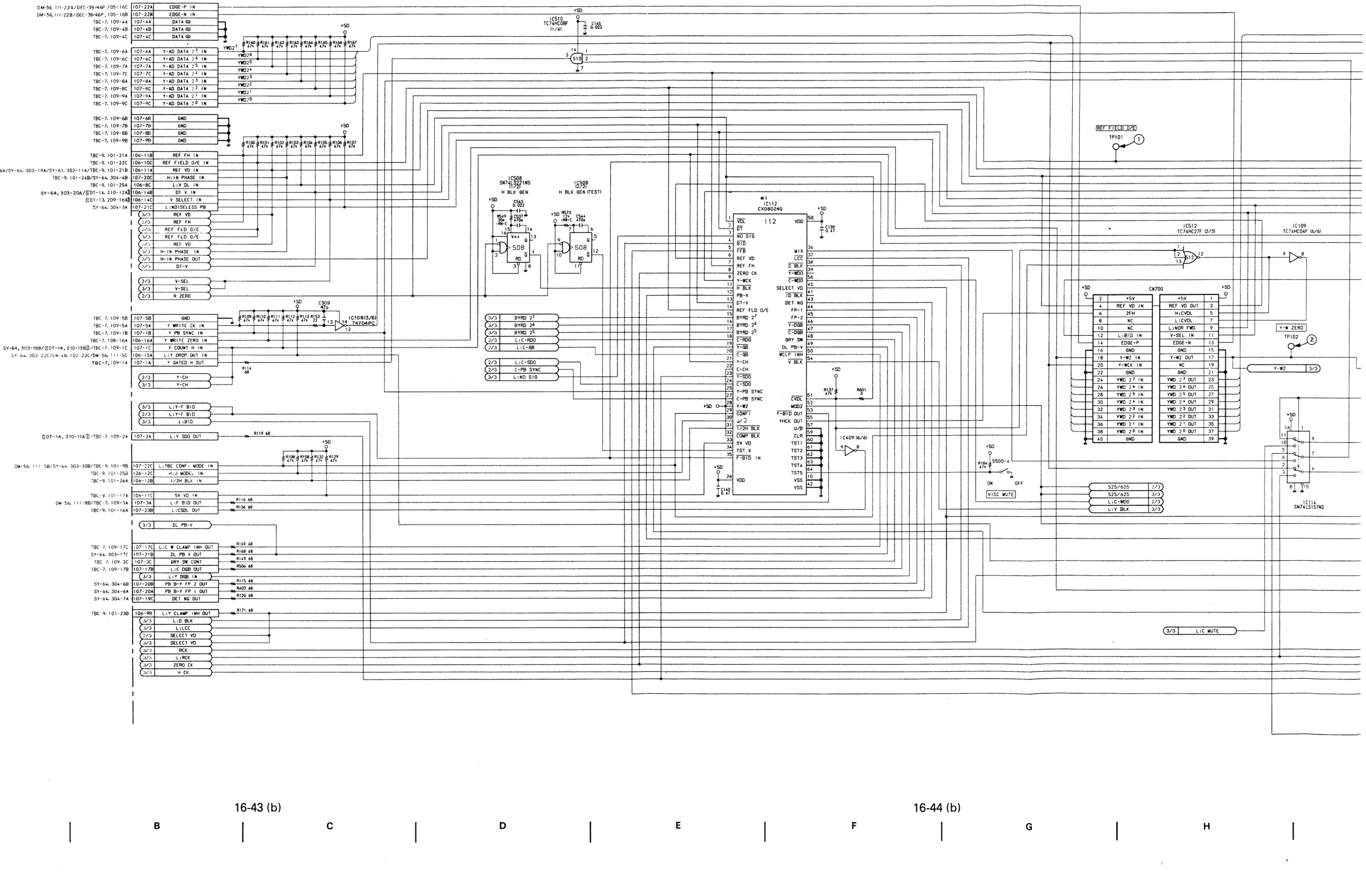


A | B | C | D | E | F | G | H

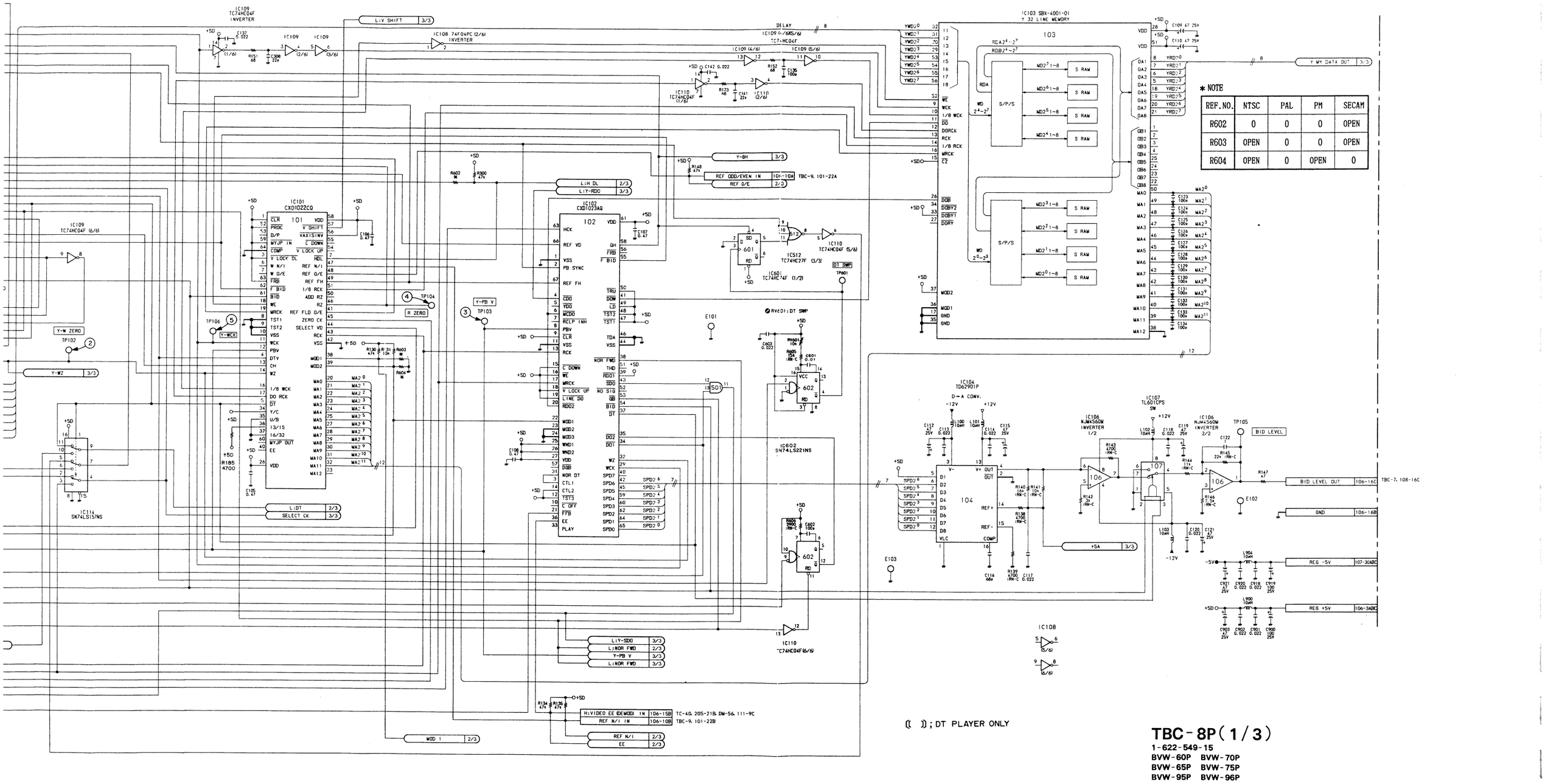


**TBC-8P (1/3)**
**1-622-549-15**
**BVW-60P BVW-70P**
**BVW-65P BVW-75P**
**BVW-95P BVW-96P**

# TBC-12P (1/3); Y MAIN MEMORY

S/N 10713 and higher

NOTE

| MARK | CHANGE INFORMATION | SERIAL NO. |
|---|---|---|
| *1 | ADDED<br>C136, R154, R831, R833<br>CHANGED<br>IC108, 74F04PC → 74F02PC | S/N 11103 ～ |

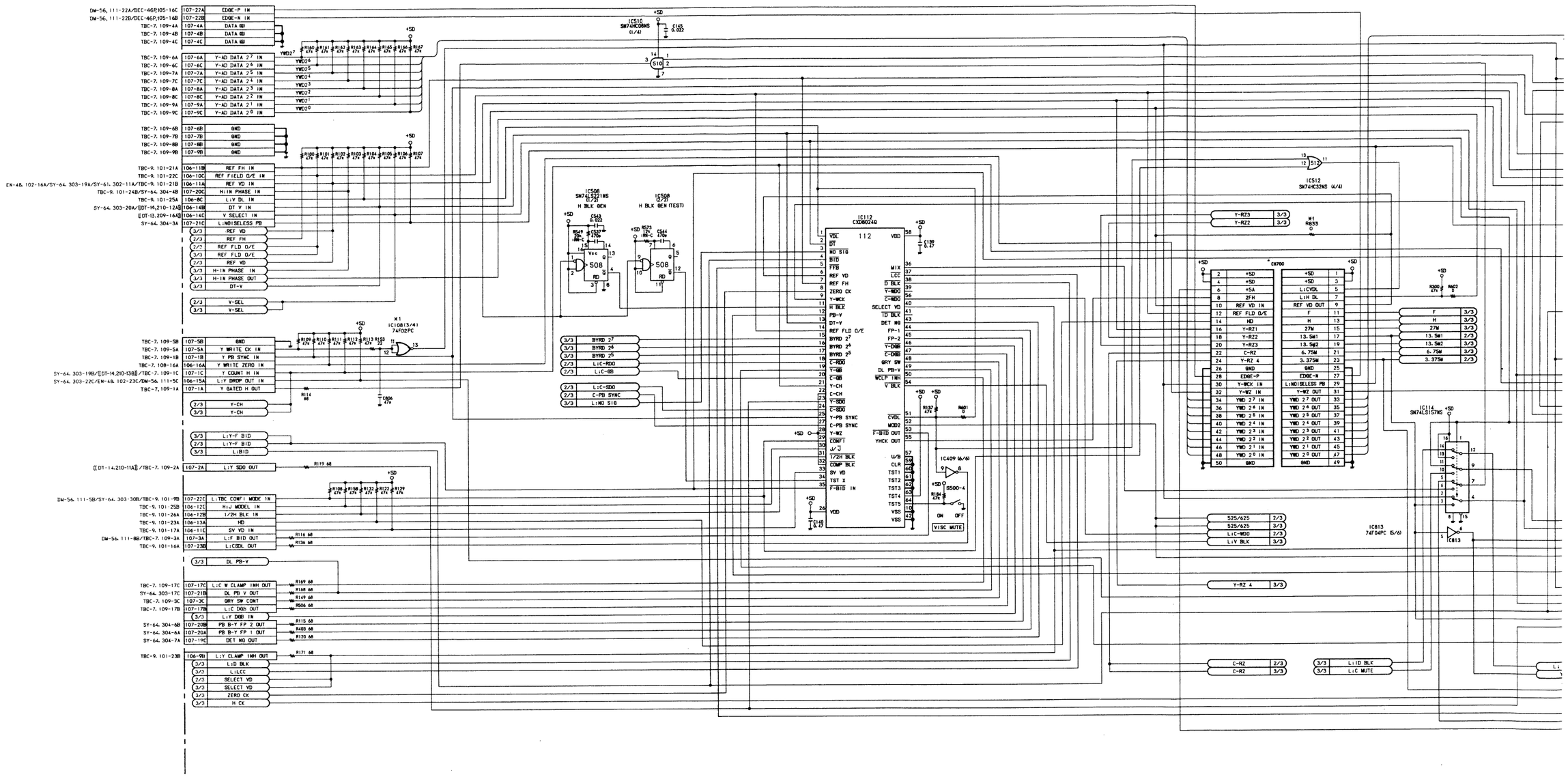


16-43(c)　16-44(c)

A　B　C　D　E　F　G　H

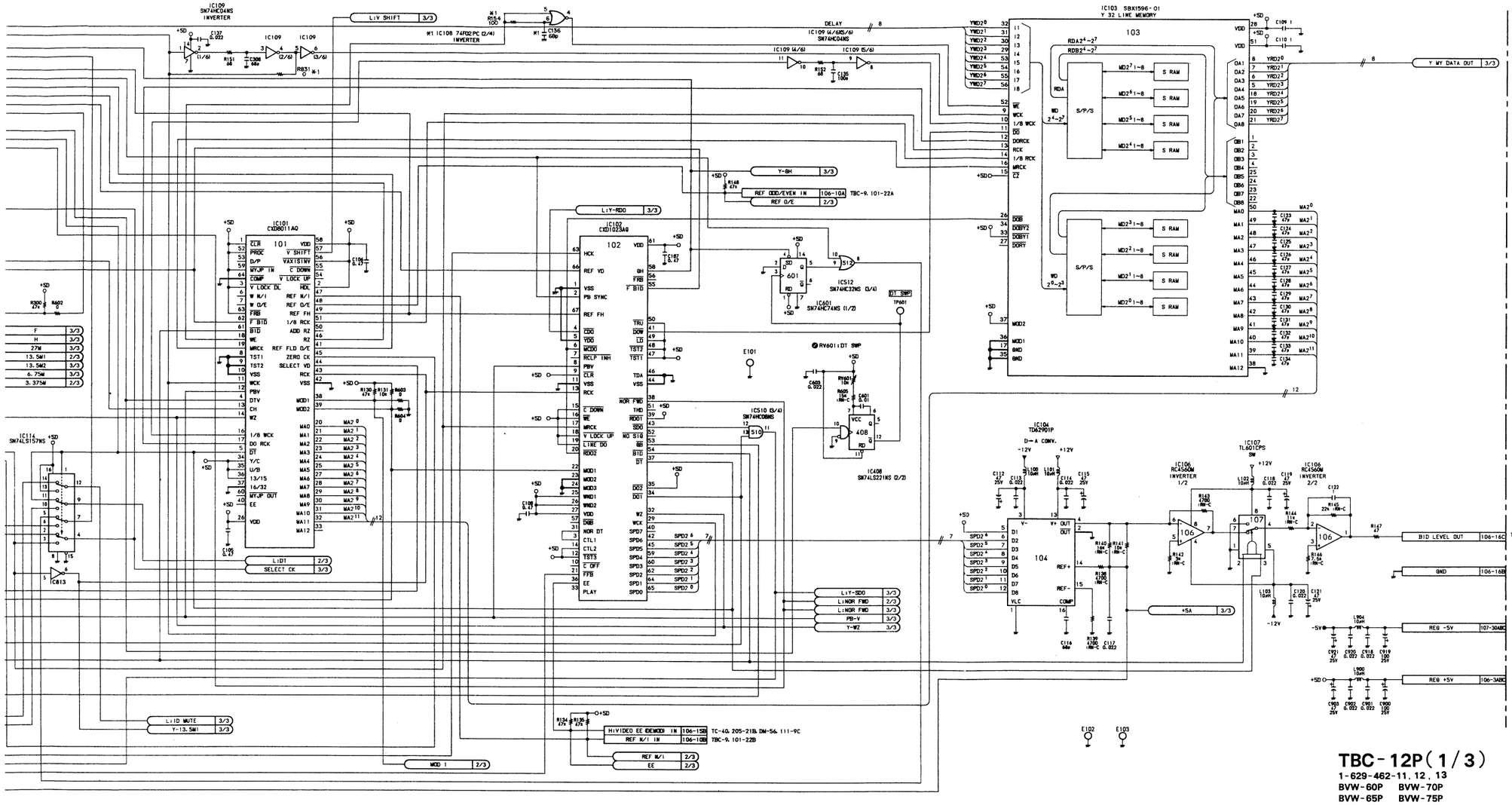


## TBC-12P(1/3)

1-629-462-11, 12, 13

BVW-60P BVW-70P
BVW-65P BVW-75P
BVW-95P BVW-96P

( ); DT PLAYER ONLY

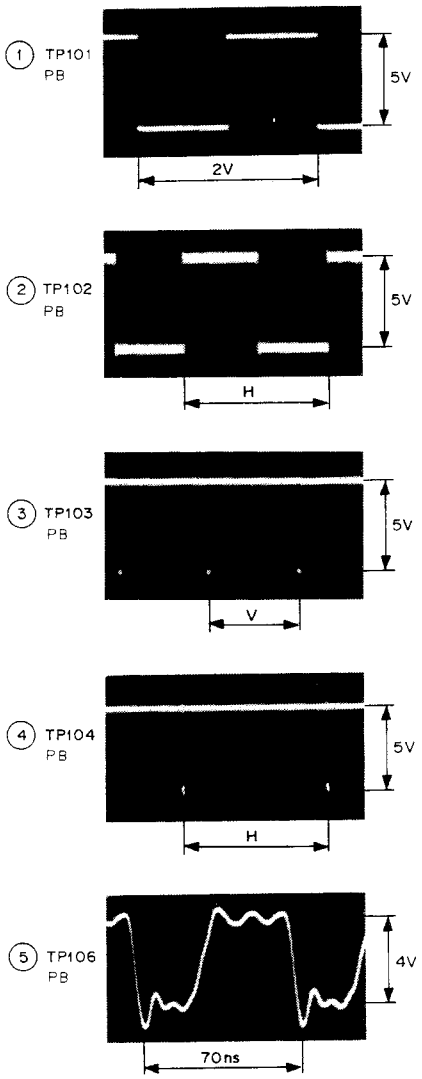
1 TP101
PB
5V
2V
2 TP102
PB
5V
H
3 TP103
PB
5V
V
4 TP104
PB
5V
H
5 TP106
PB
4V
70ns

# TBC-8P (2/3); C MAIN MEMORY

S/N 10001 through 10355

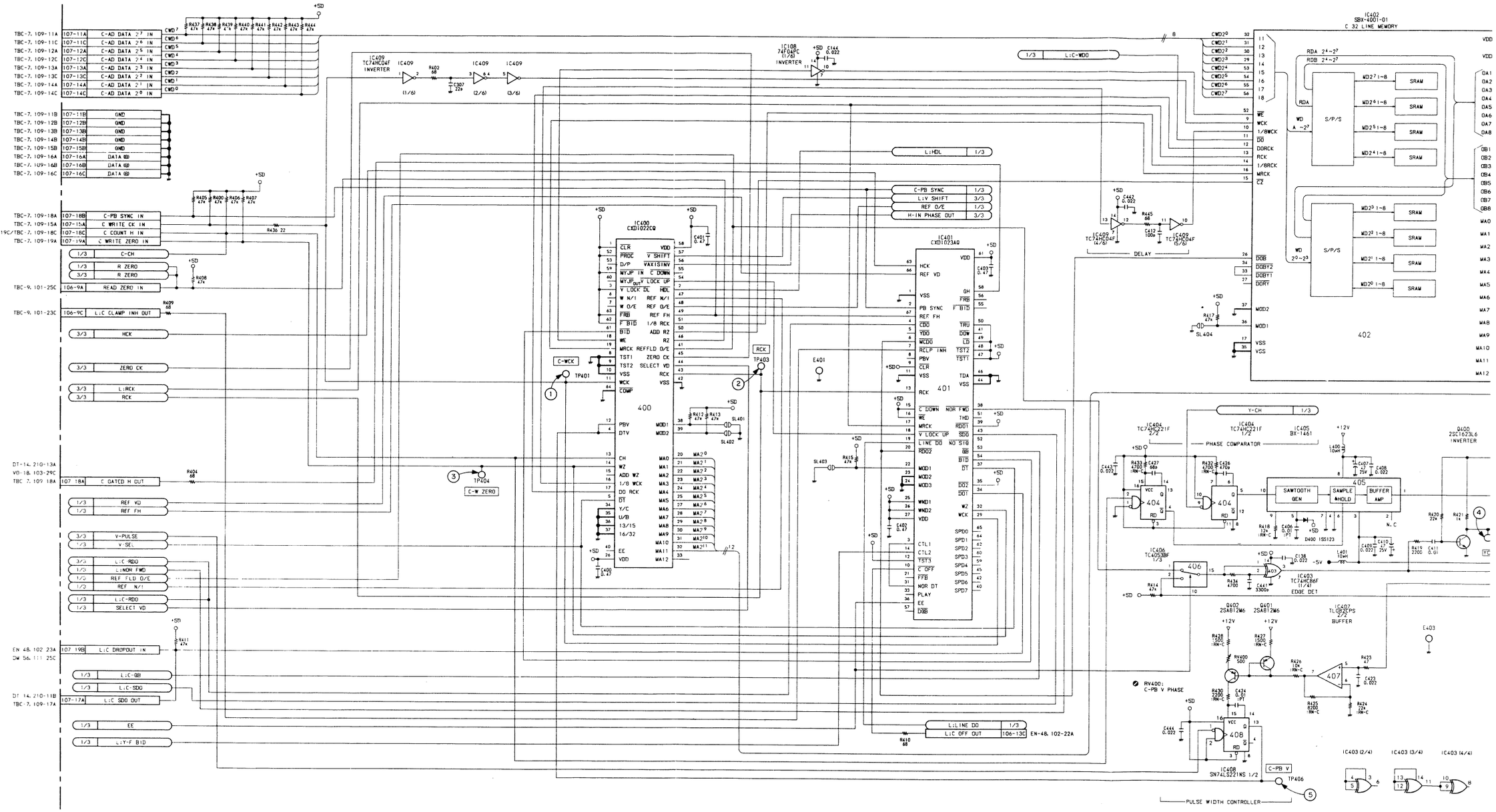


16-50 (a)

16-51 (a)

A B C D E F G H

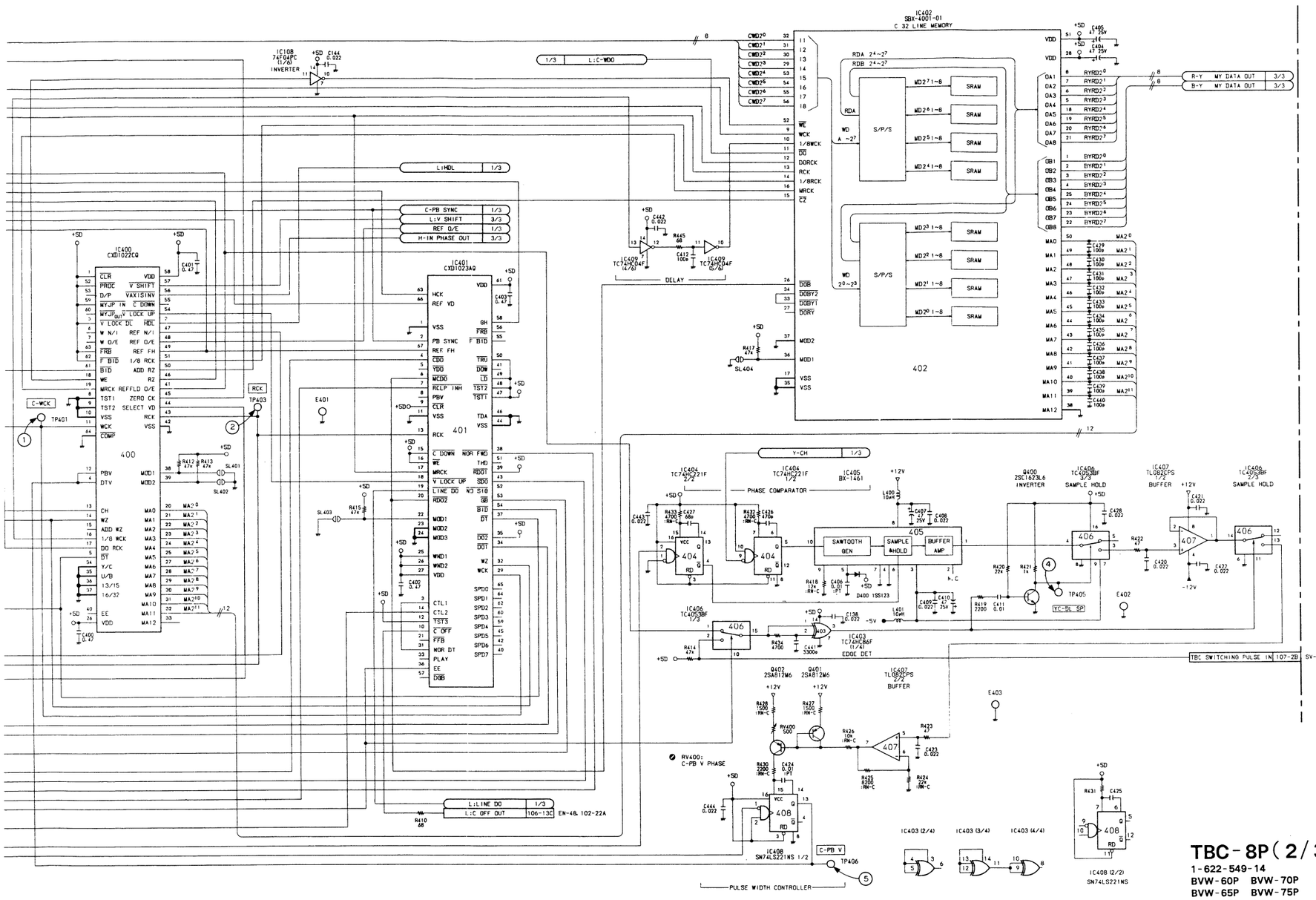


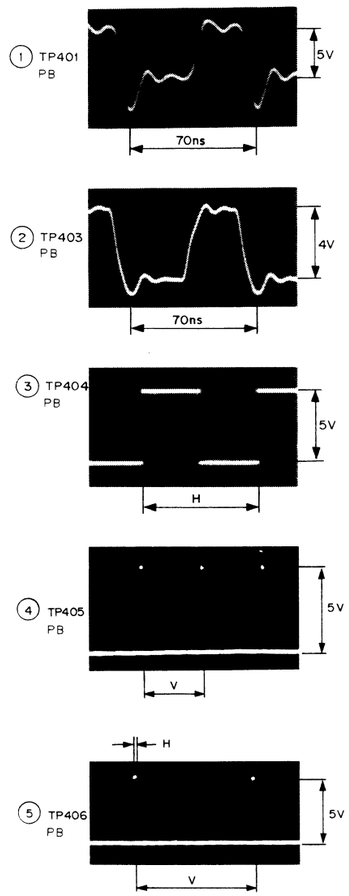


**TBC-8P(2/3)**
1-622-549-14
BVW-60P BVW-70P
BVW-65P BVW-75P
BVW-95P BVW-96P

# TBC-8P (2/3); C MAIN MEMORY

S/N 10356 through 10712

〚 〛; DT PLAYER ONLY

 TBC-8P (2/3)

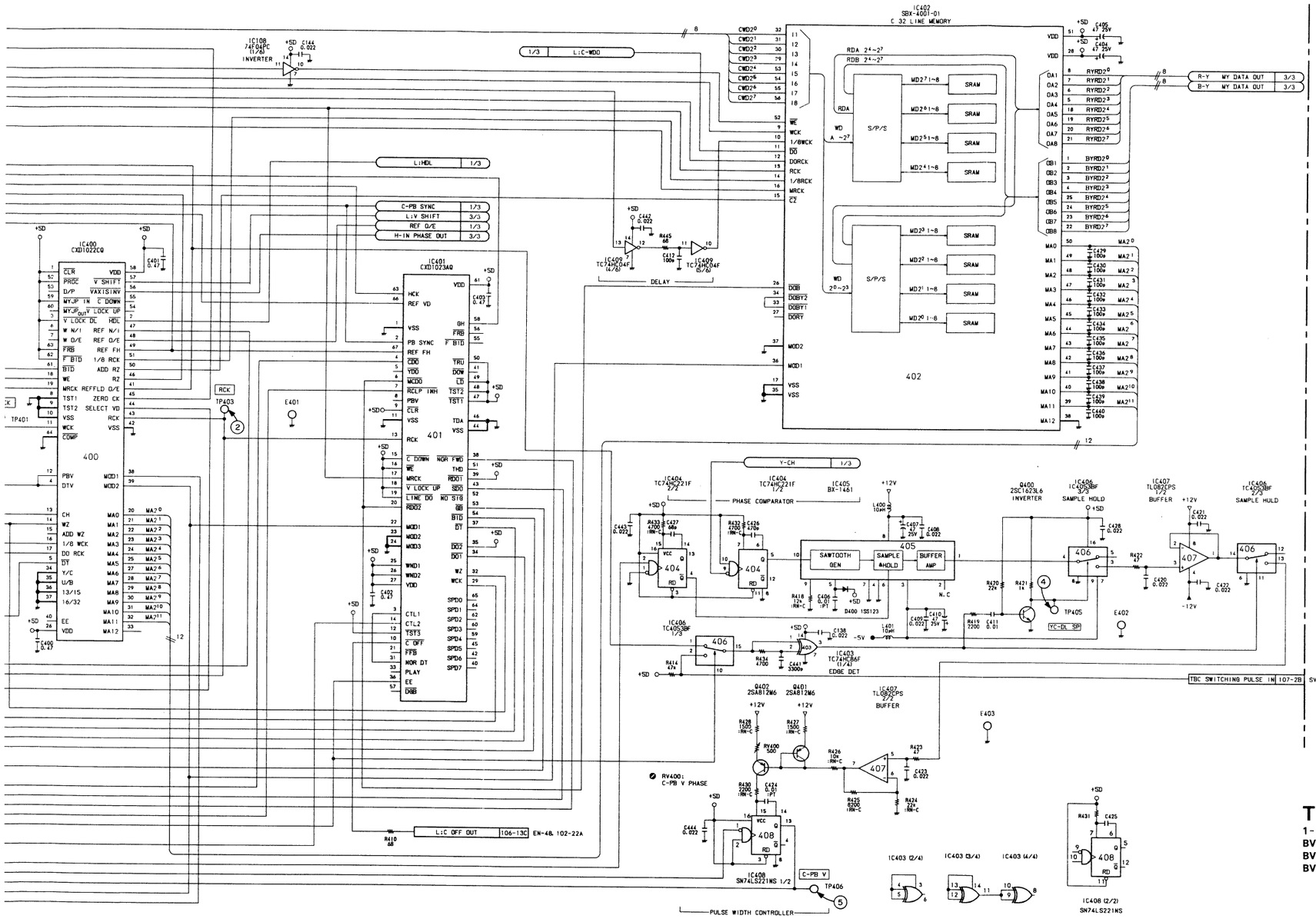


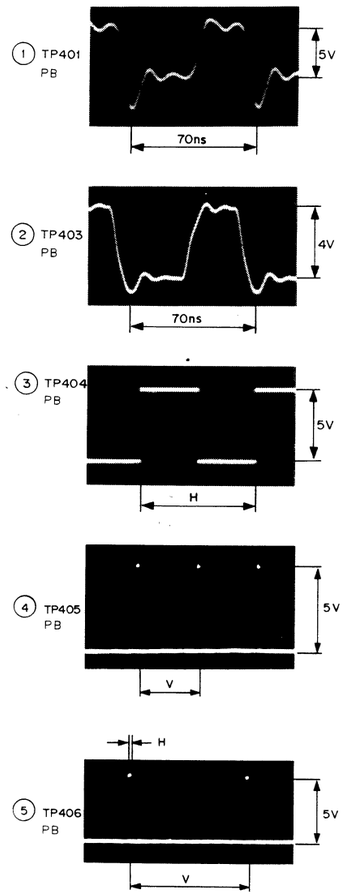


# TBC-8P(2/3)

1-622-549-15
BVW-60P BVW-70P
BVW-65P BVW-75P
BVW-95P BVW-96P

[ ] ; DT PLAYER ONLY

16-51 (b)

16-52 (b)

E F G H I J K L

# TBC-12P (2/3) ; C MAIN MEMORY

S/N 10713 and higher

NOTE

| MARK | CHANGE INFORMATION | SERIAL NO. |
|---|---|---|
| *1 | C445 100pF ADDED | S/N 10913 ~ |
| *2 | R445 68 → 150 | S/N 10928 ~ |
| *3 | C445 100pF DELETED | S/N 11083 ~ |
| *4 | IC108 74F04PC → 74F02PC<br>R402 68 → 150 | S/N 11103 ~ |

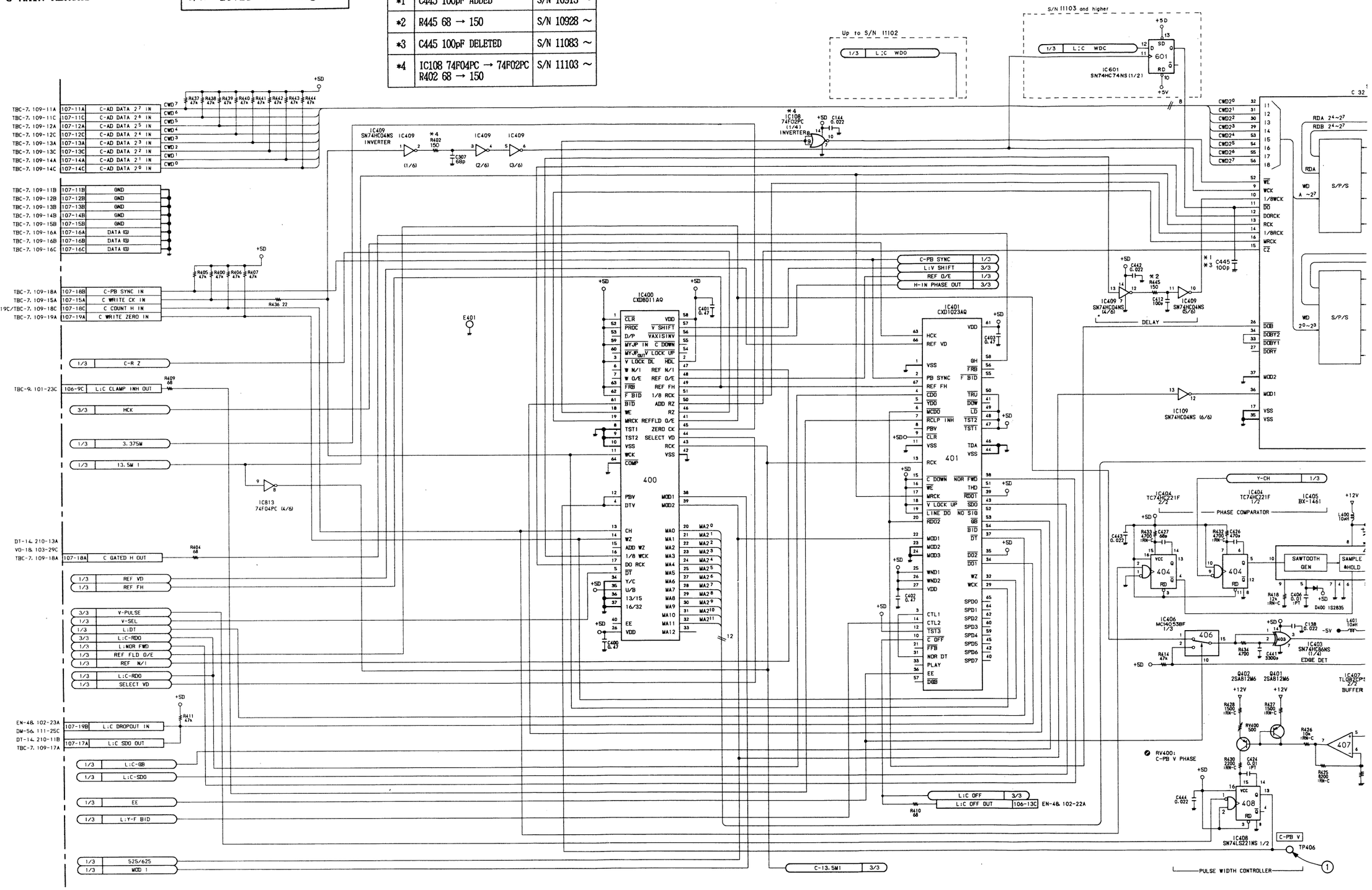


16-50(c)

16-51(c)

| ION | SERIAL NO. |
|---|---|
| | S/N 10913 ～ |
| | S/N 10928 ～ |
| | S/N 11083 ～ |
| 4F02PC | S/N 11103 ～ |

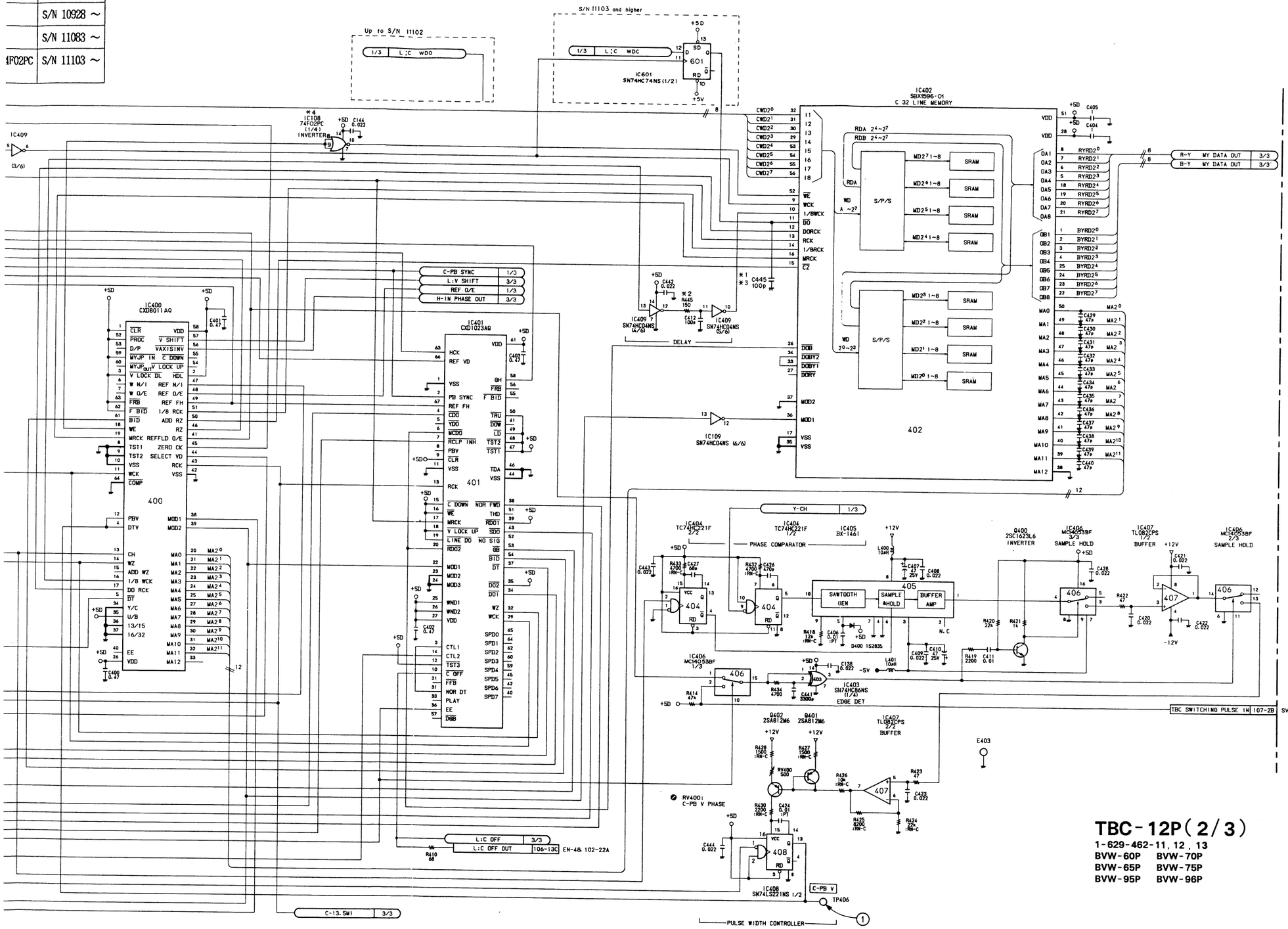


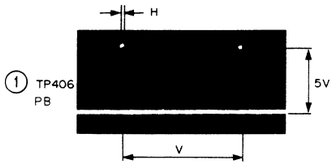


**TBC-12P(2/3)**
**1-629-462-11, 12, 13**
**BVW-60P BVW-70P**
**BVW-65P BVW-75P**
**BVW-95P BVW-96P**

16-51(c)

16-52(c)

E F G H I J K L

**TBC-8P** (3/3) ; D/A CONVERTER
**NR-25** ; Y DIGITAL NOISE REDUCTION

S/N 10001 through 10355

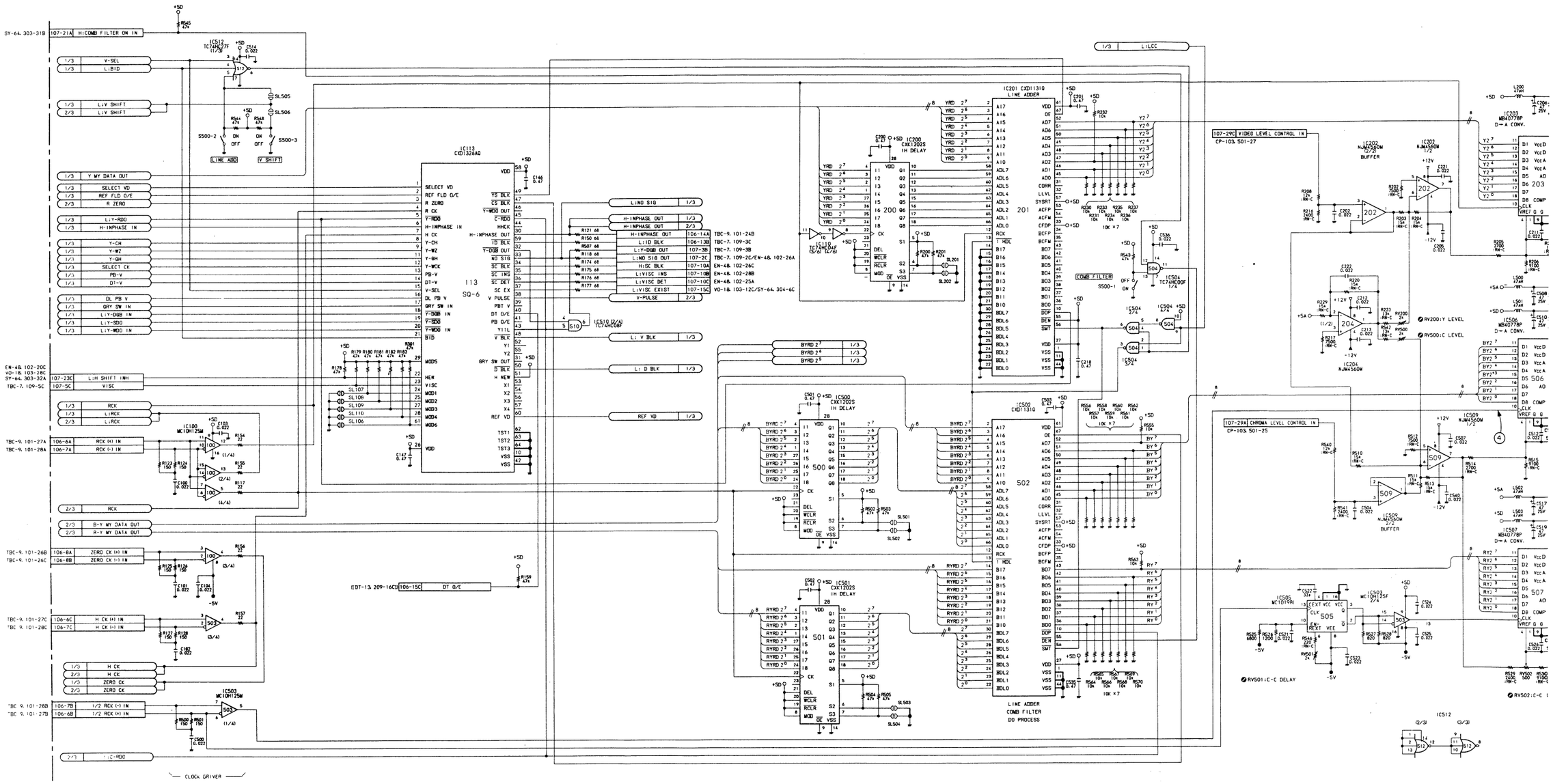


16-57 (a)

16-58 (a)

A B C D E F G H

TBC-8P(3/3)
1-622-549-14
BVW-60P BVW-70P
BVW-65P BVW-75P
BVW-95P BVW-96P

[ ]; DT PLAYER ONLY

NR-25
1-624-023-12
BVW-60P BVW-70P
BVW-65P BVW-75P
BVW-95P BVW-96P

**TBC-8P (3/3); D/A CONVERTER**
**NR-25; Y DIGITAL NOISE REDUCTION**

S/N 10356 through 10712

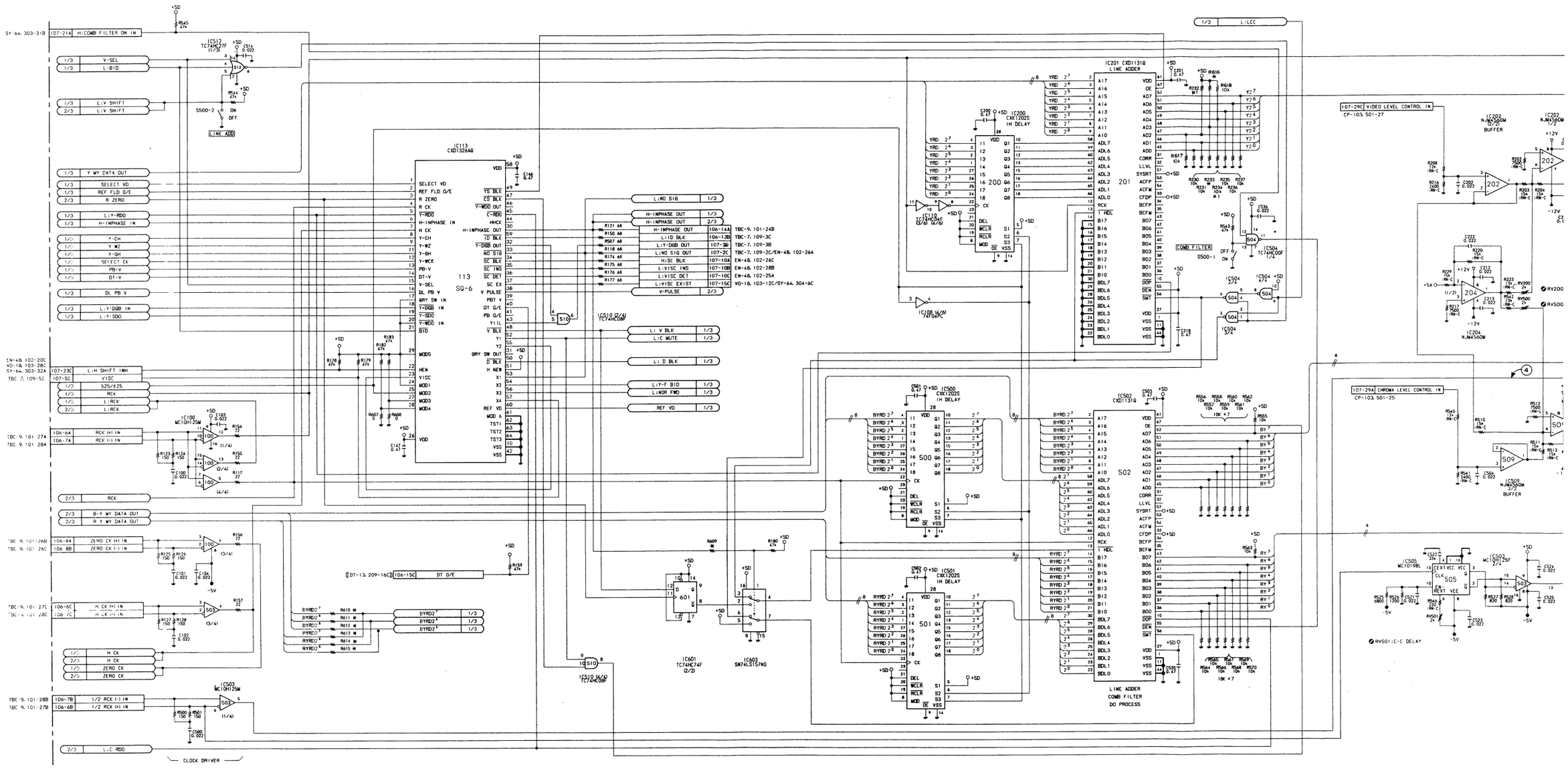


16-57 (b)

16-58 (b)

A B C D E F G H

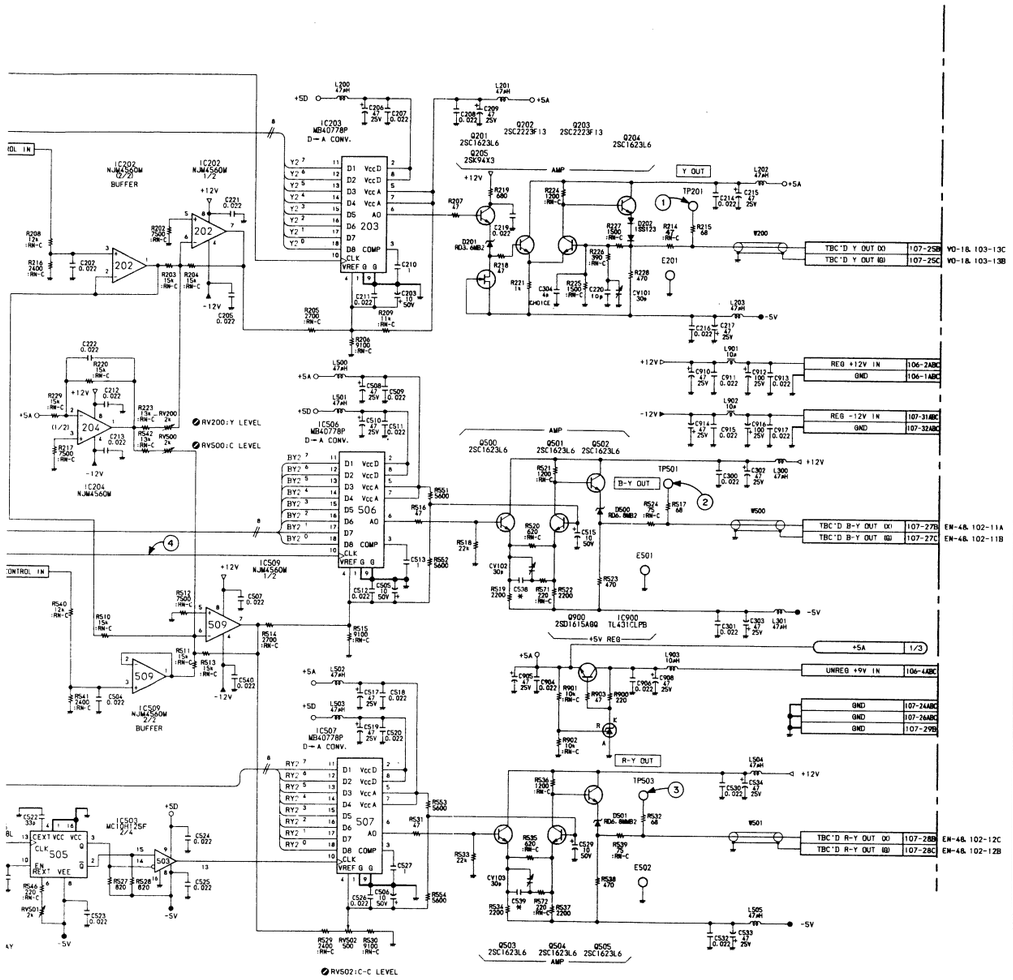


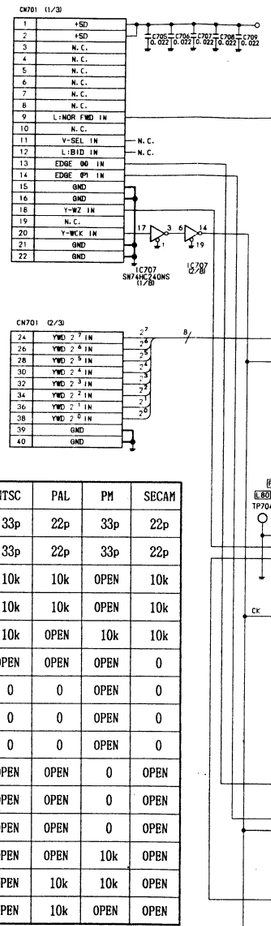


* NOTE

| REF.NO. | NTSC | PAL | PM | SECAM |
|---|---|---|---|---|
| C538 | 33p | 22p | 33p | 22p |
| C539 | 33p | 22p | 33p | 22p |
| R232 | 10k | 10k | OPEN | 10k |
| R233 | 10k | 10k | OPEN | 10k |
| R234 | 10k | OPEN | 10k | 10k |
| R609 | OPEN | OPEN | OPEN | 0 |
| R610 | 0 | 0 | OPEN | 0 |
| R611 | 0 | 0 | OPEN | 0 |
| R612 | 0 | 0 | OPEN | 0 |
| R613 | OPEN | OPEN | 0 | OPEN |
| R614 | OPEN | OPEN | 0 | OPEN |
| R615 | OPEN | OPEN | 0 | OPEN |
| R616 | OPEN | OPEN | 10k | OPEN |
| R617 | OPEN | 10k | 10k | OPEN |
| R618 | OPEN | 10k | OPEN | OPEN |

## TBC-8P (3/3)

1-622-549-15
BVW-60P BVW-70P
BVW-65P BVW-75P
BVW-95P BVW-96P

## NR-25

1-624-023-12
BVW-60P BVW-70P
BVW-65P BVW-75P
BVW-95P BVW-96P

(( )) ; DT PLAYER ONLY

# TBC-12P (3/3) ; D/A CONVERTER, DIGITAL VIDEO PALLALEL OUTPUT

S/N 10713 and higher

NOTE

| MARK | CHANGE INFORMATION | SERIAL NO. |
|---|---|---|
| *1 | R258 1500 → 1800 | S/N 10913 ～ |
| *2 | D202 RD3.6MB2 → 1S2836<br>R262 620→ 390<br>R268 2K ADDED | S/N 10928 ～ |
| *3 | D201 RD3.6MB2 →<br>R269 430<br>Q205 2SK94-X3 →<br>R270 750<br>R258 1800 → 1600<br>R262 390 → 220 | S/N 11103 ～ |
| *4 | ADDED<br>R273, R832<br>CHANGED<br>IC108 74F04PC →<br>74F02PC<br>IC108-5, 6 PIN →<br>IC813-13, 12 PIN | S/N 11103 ～ |

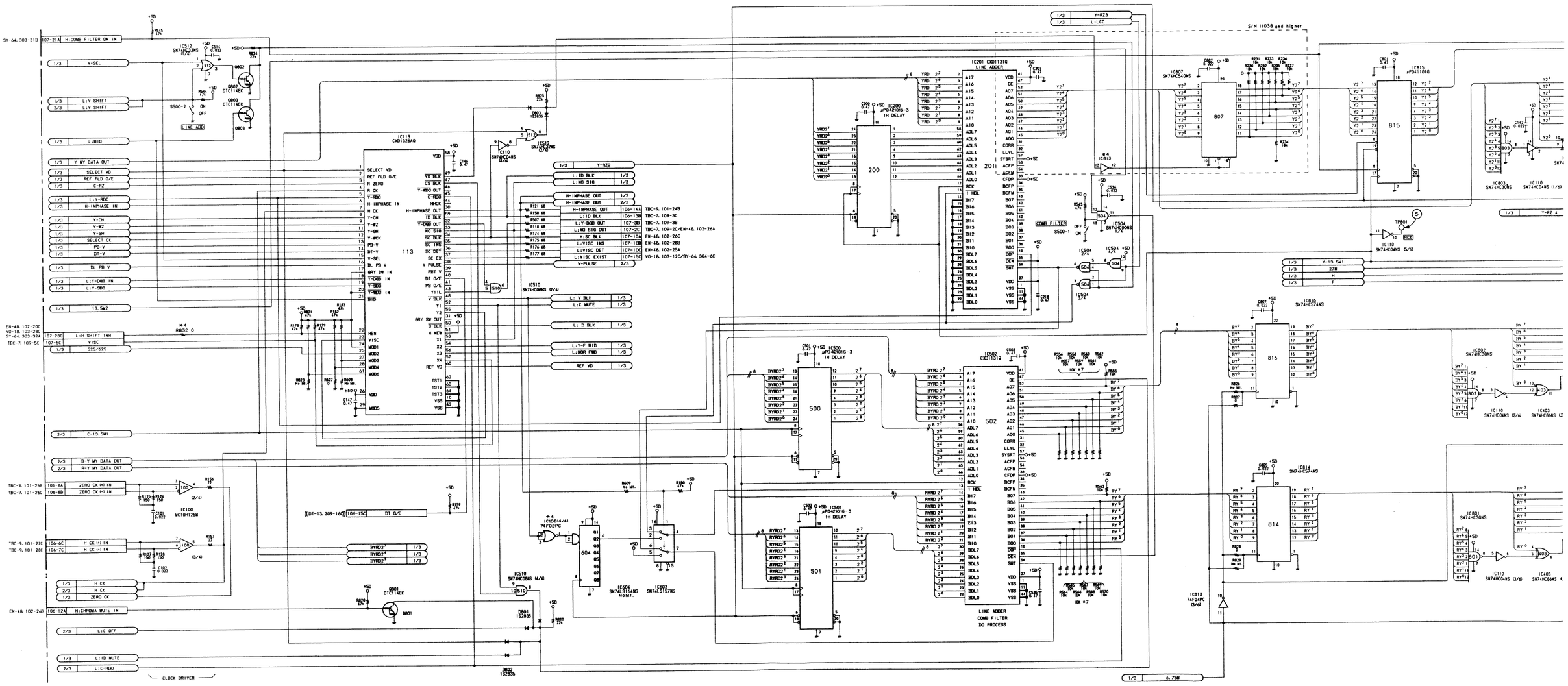


16-57(c)　　16-58(c)

A　B　C　D　E　F　G　H

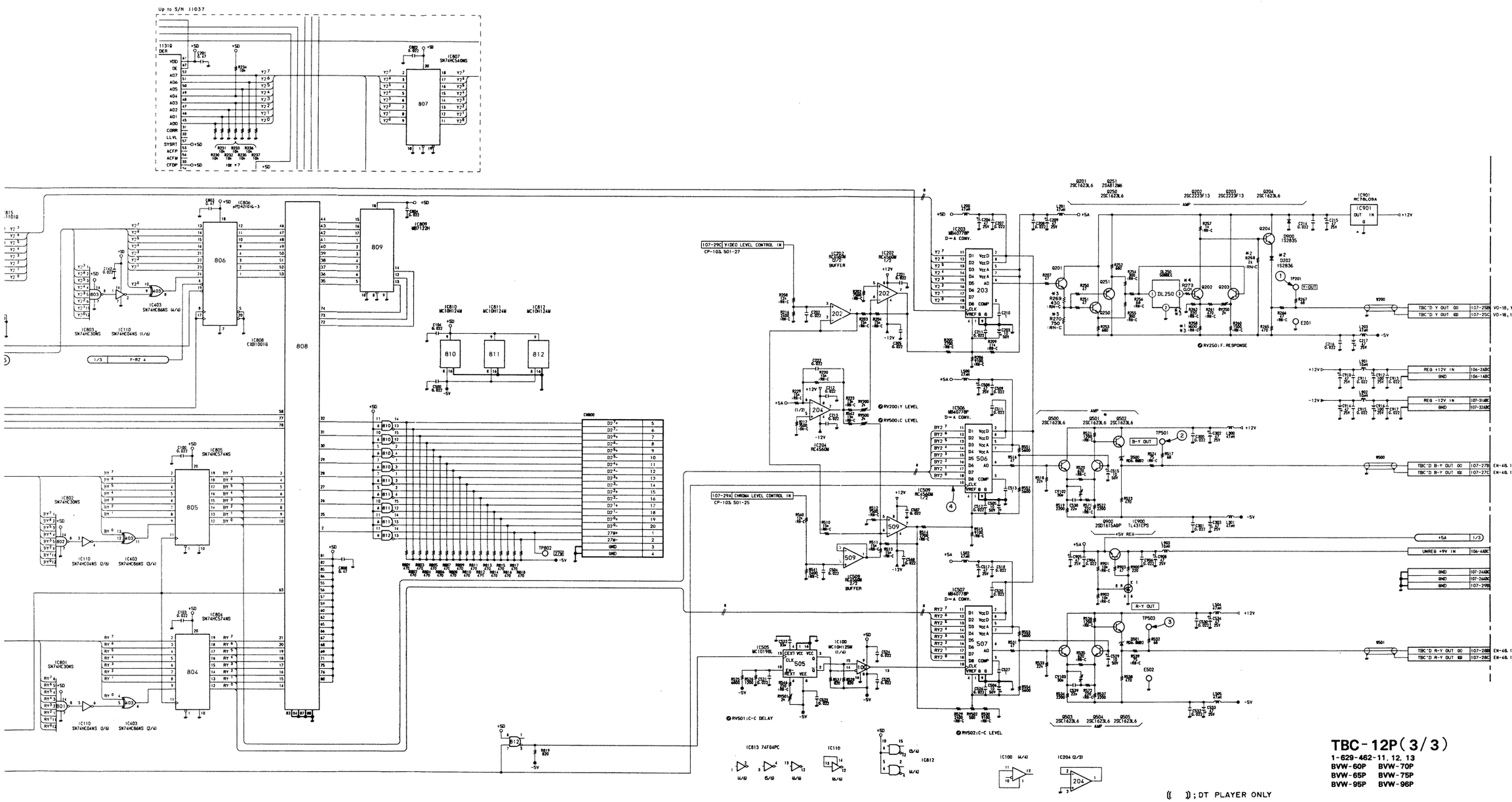


## TBC-12P(3/3)

**1-629-462-11, 12, 13**

**BVW-60P BVW-70P**
**BVW-65P BVW-75P**
**BVW-95P BVW-96P**

(( )) ; DT PLAYER ONLY

16-59(c)

16-60(c)

I J K L M N O P

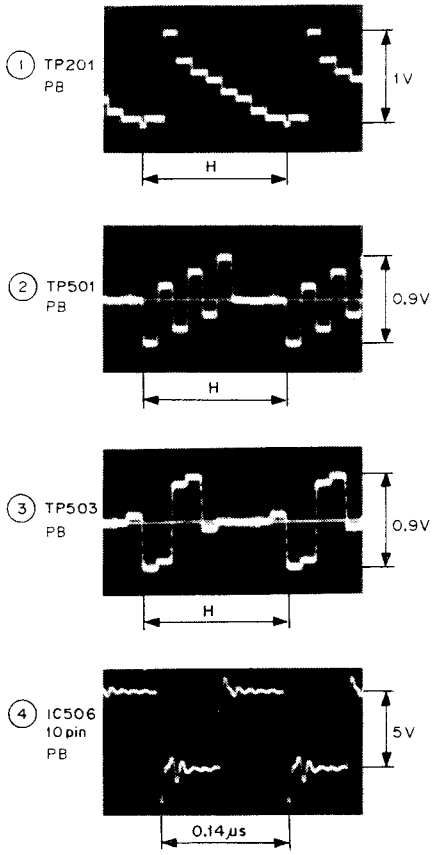
1 TP201
PB
1V
H
2 TP501
PB
0.9V
H
3 TP503
PB
0.9V
H
4 IC506
10 pin
PB
5V
0.14 µs

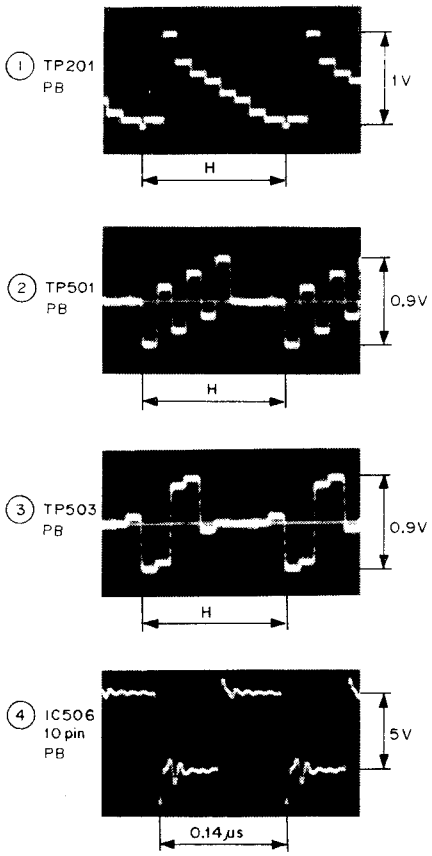
1 TP201
PB
1V
H
2 TP501
PB
0.9V
H
3 TP503
PB
0.9V
H
4 IC506
10 pin
PB
5V
0.14 µs

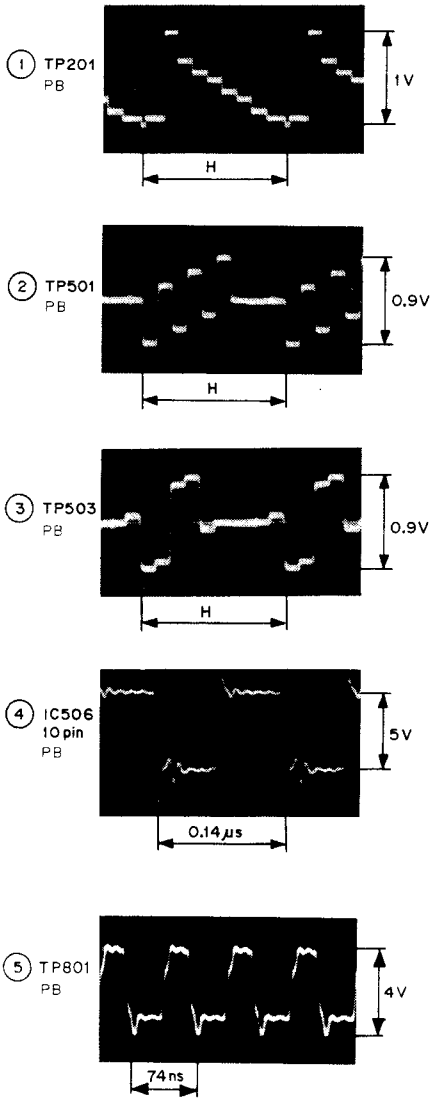
① TP201
PB
1V
H
② TP501
PB
0.9V
H
③ TP503
PB
0.9V
H
④ IC506
10 pin
PB
5V
0.14μs
⑤ TP801
PB
4V
74ns

NR-32 NR-32

# NR-32 ; Y DIGITAL NOISE REDUCTION, READ CLOCK GENERATOR

S/N 10713 and higher

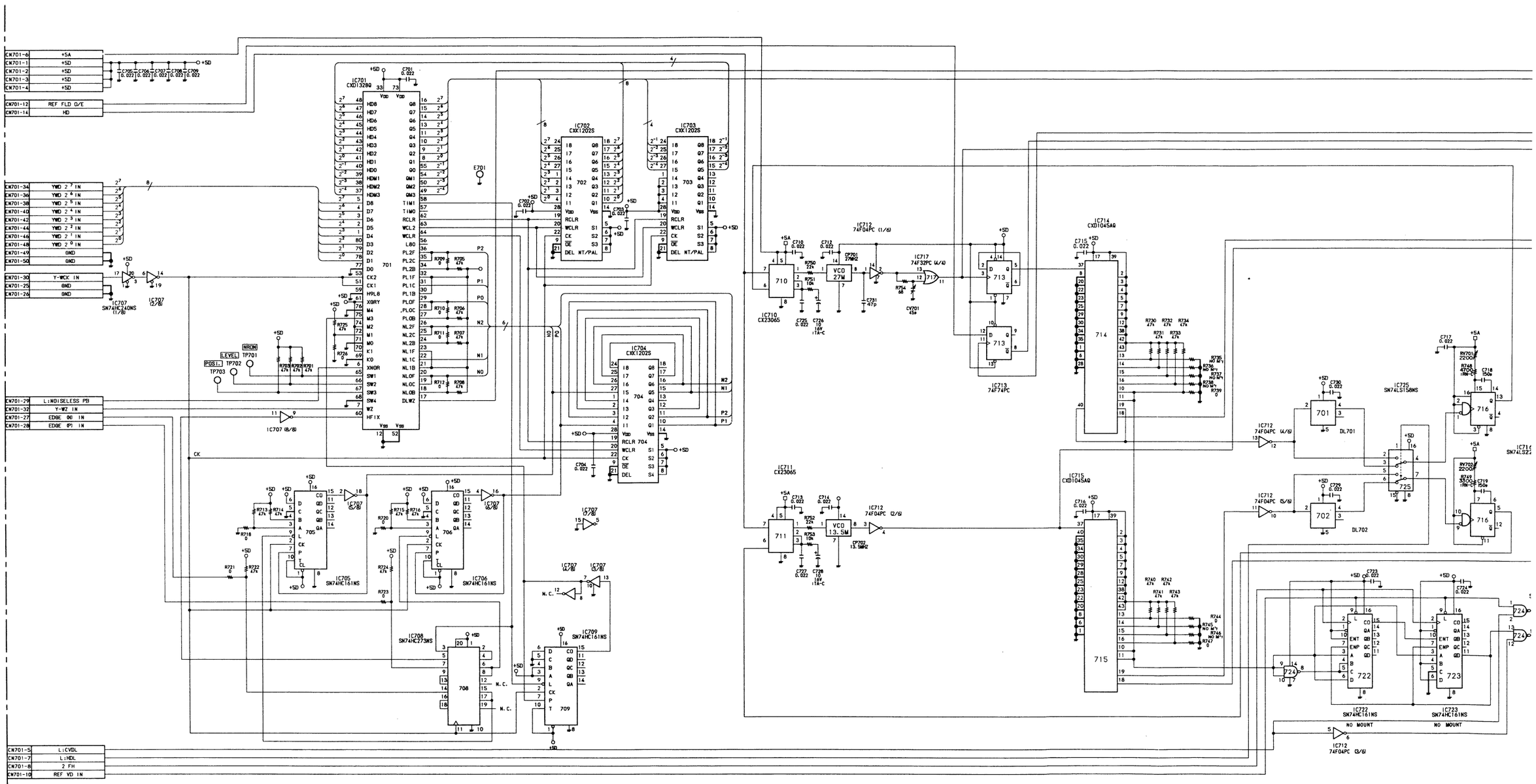


16-60 (c)-2

16-60 (c)-3

A B C D E F G H

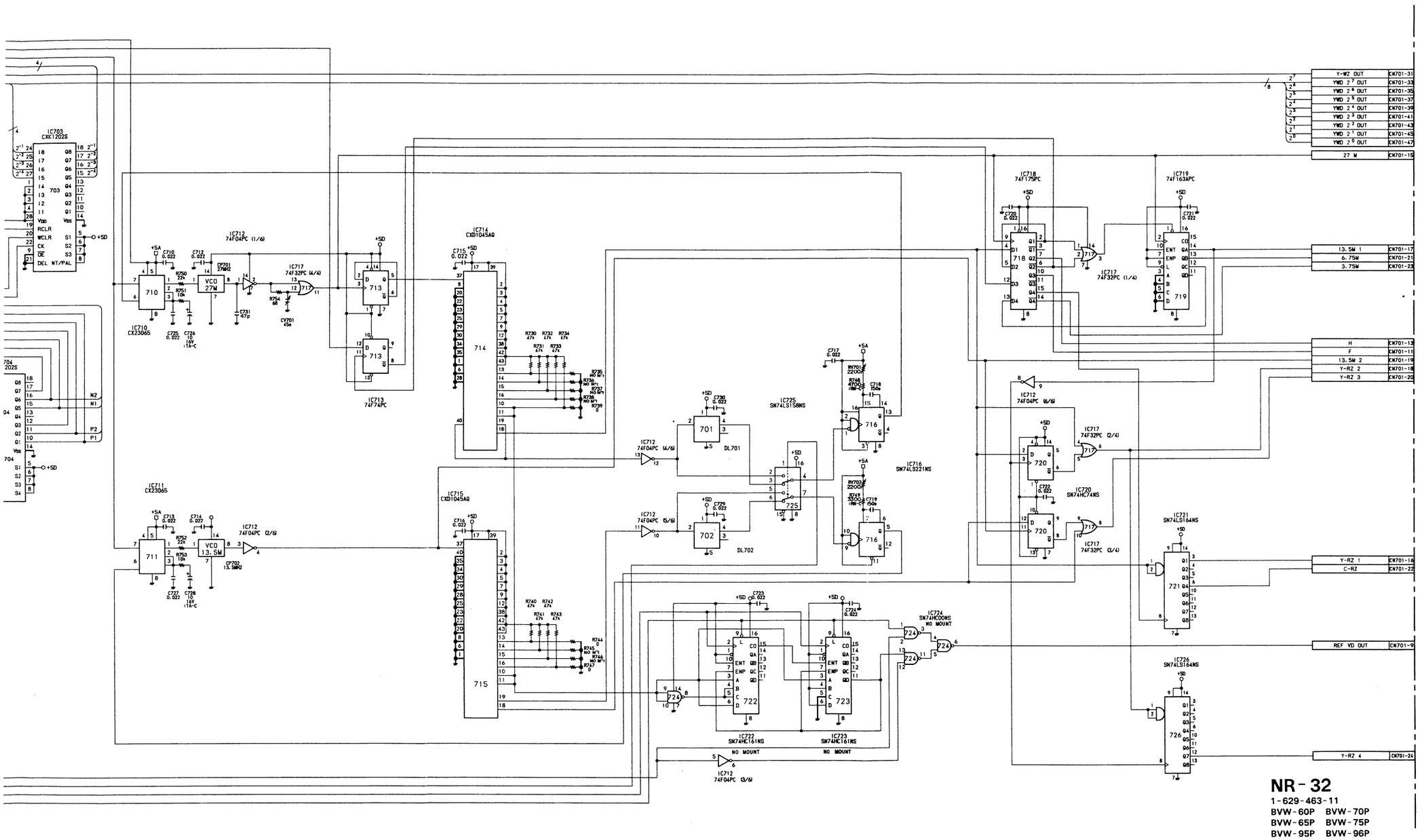


**NR-32**
1-629-463-11
BVW-60P BVW-70P
BVW-65P BVW-75P
BVW-95P BVW-96P

16-60 (c)-3 16-60 (c)-4

E F G H I J K L

# TBC-9P (1/2); REFERENCE SIGNAL GENERATOR

S/N 10001 through 10060

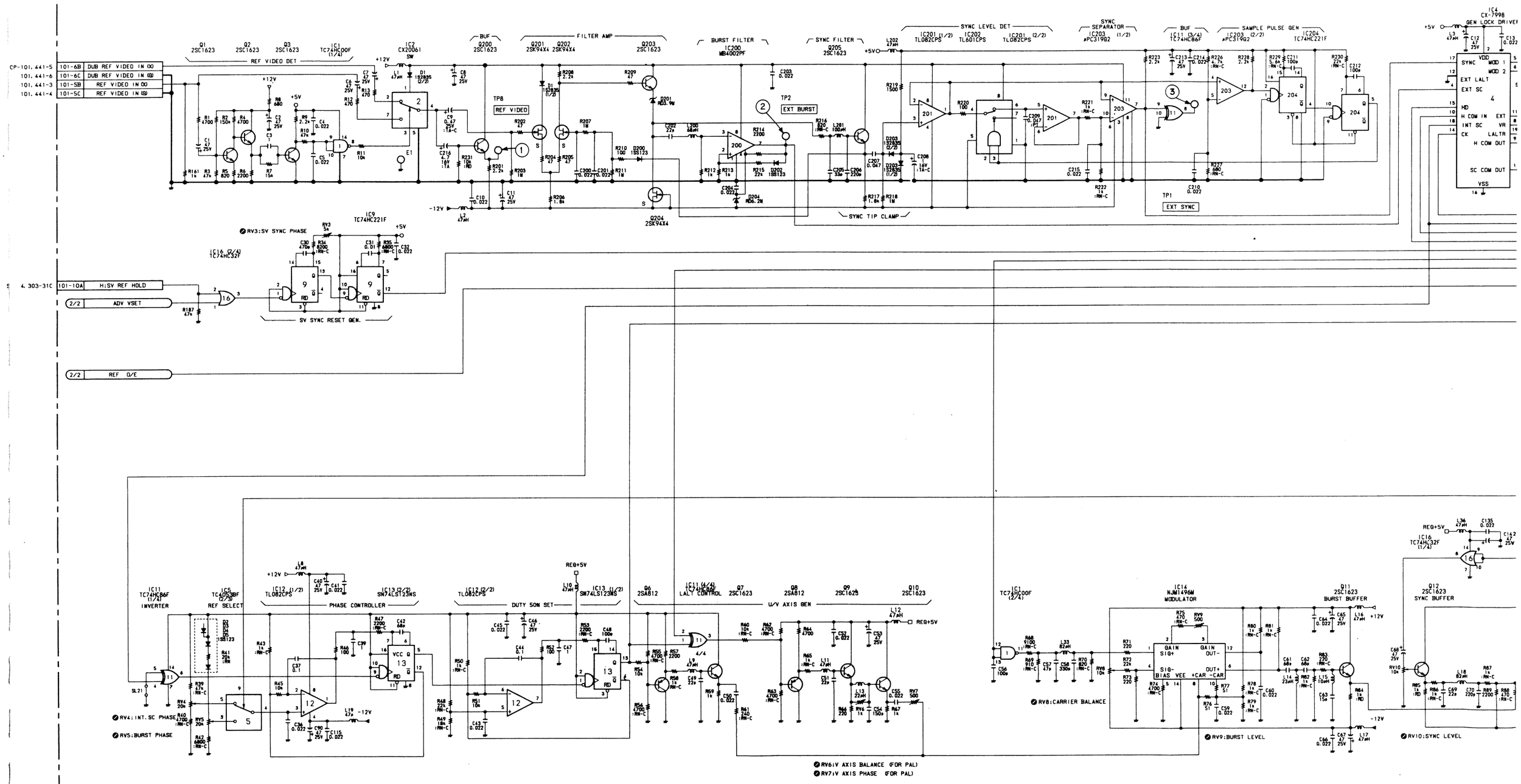


16-65 (a)

16-66 (a)

A　B　C　D　E　F　G　H　I

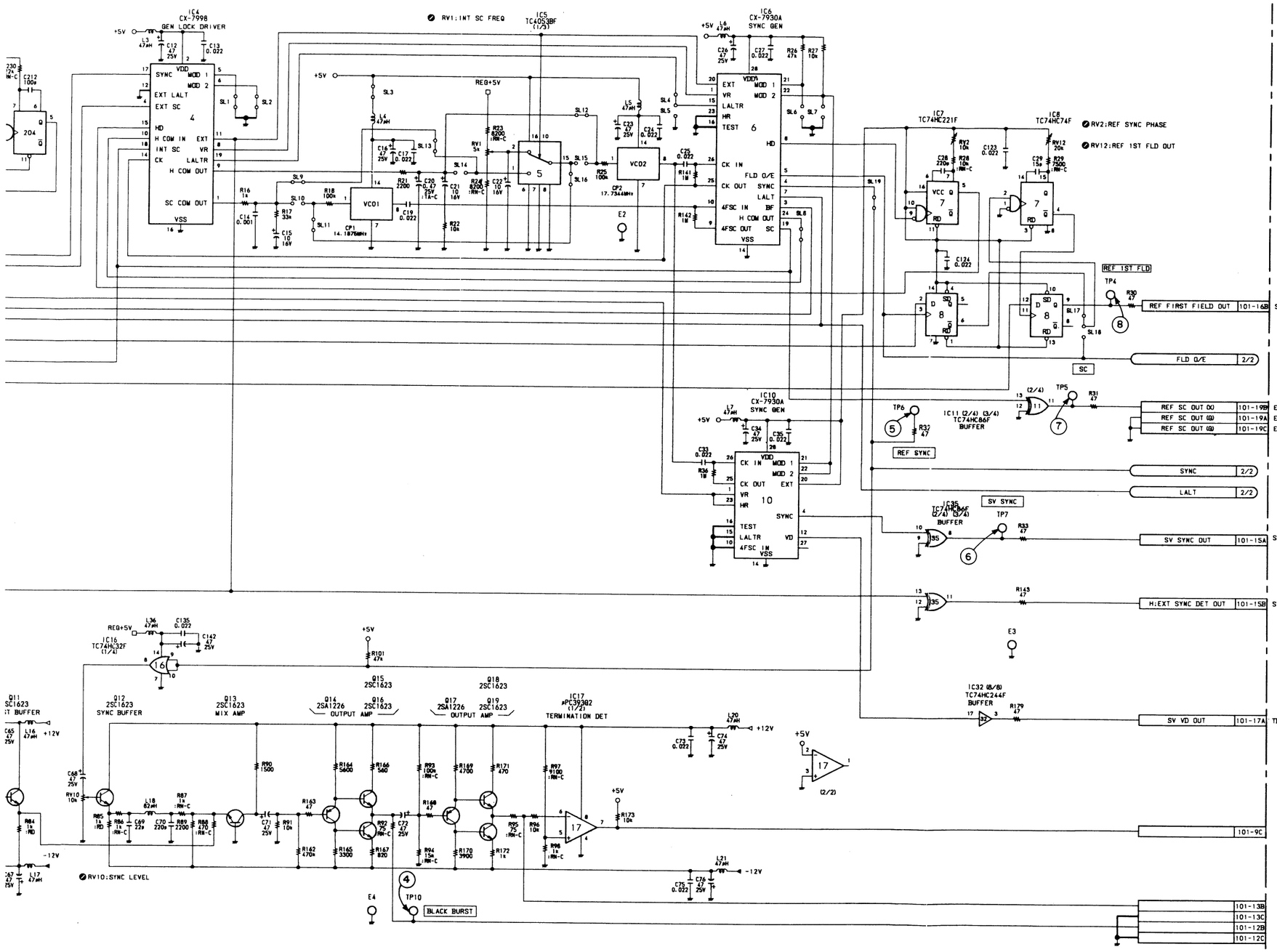


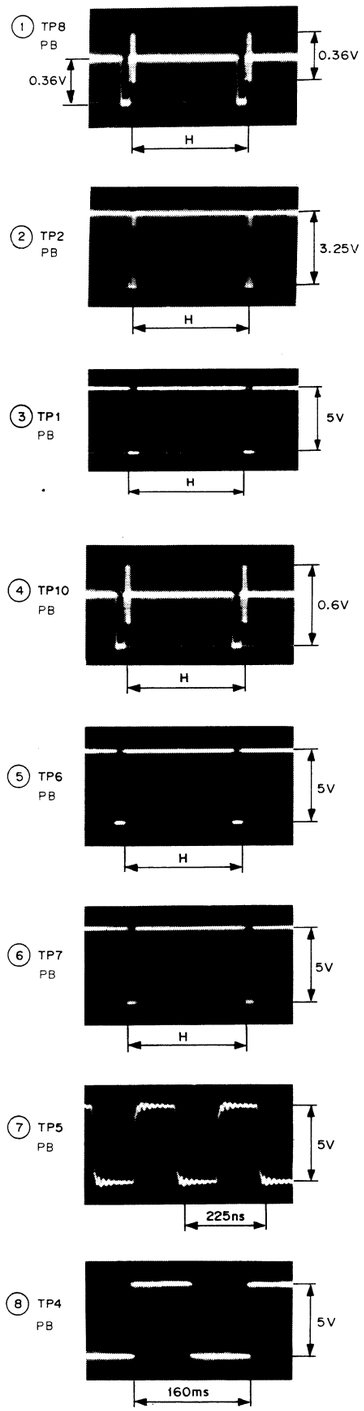


**TBC-9P (1/2)**
1-622-550-12
BVW-60P
BVW-95P

16-67 (a)

16-68 (a)

I J K L M N O P

# TBC-9P (1/2); REFERENCE SIGNAL GENERATOR

S/N 10061 and higher

NOTE

| MARK | CHANGE INFORMATION | SERIAL NO. |
|---|---|---|
| *1 | R42 1200 → 1600<br>R332 2200 → 1800 | S/N 10713 ～ |
| *2 | C49 47pF → 39pF | S/N 10928 ～ |

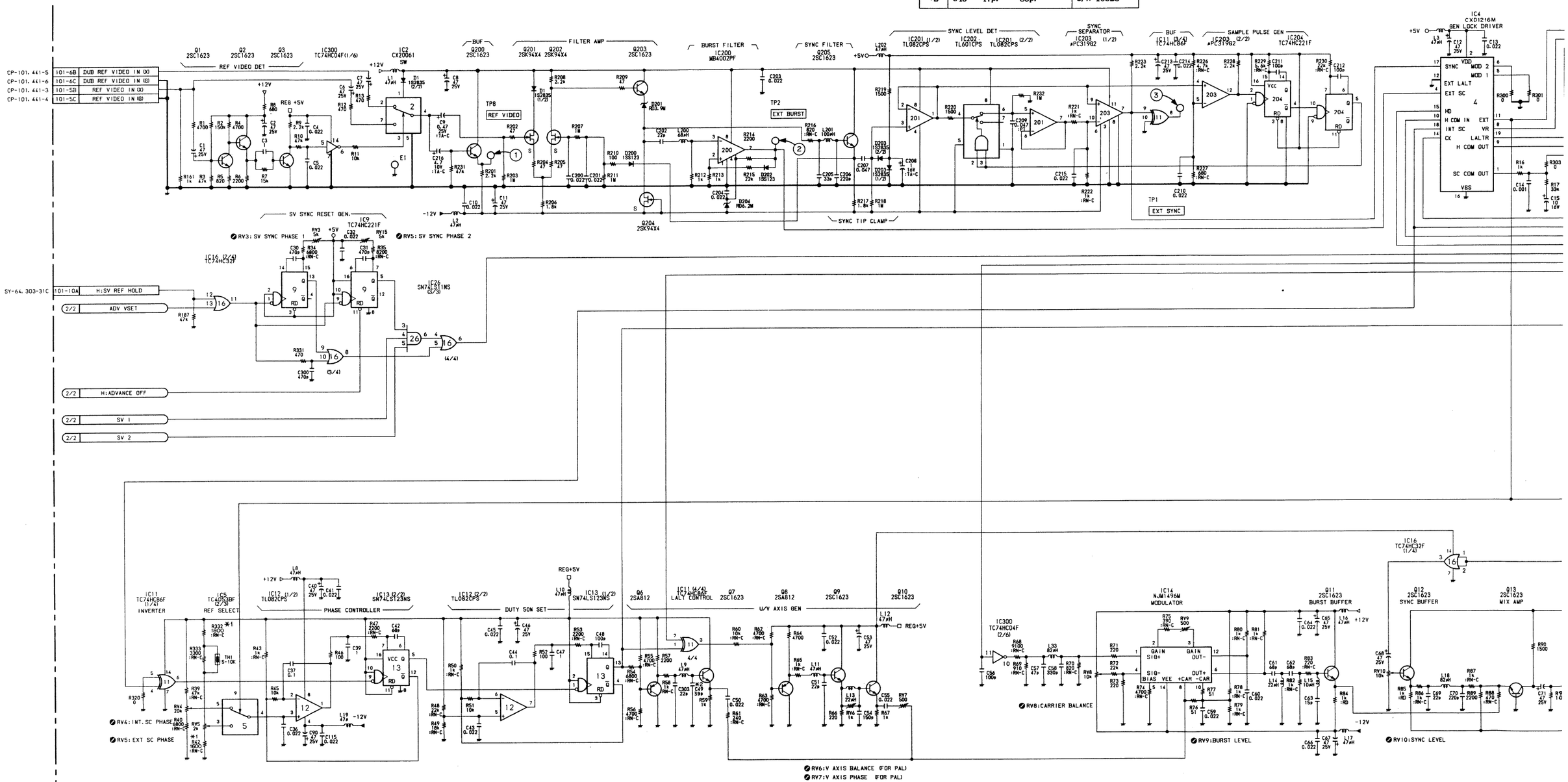


16-65 (b)　　16-66 (b)

A　B　C　D　E　F　G　H

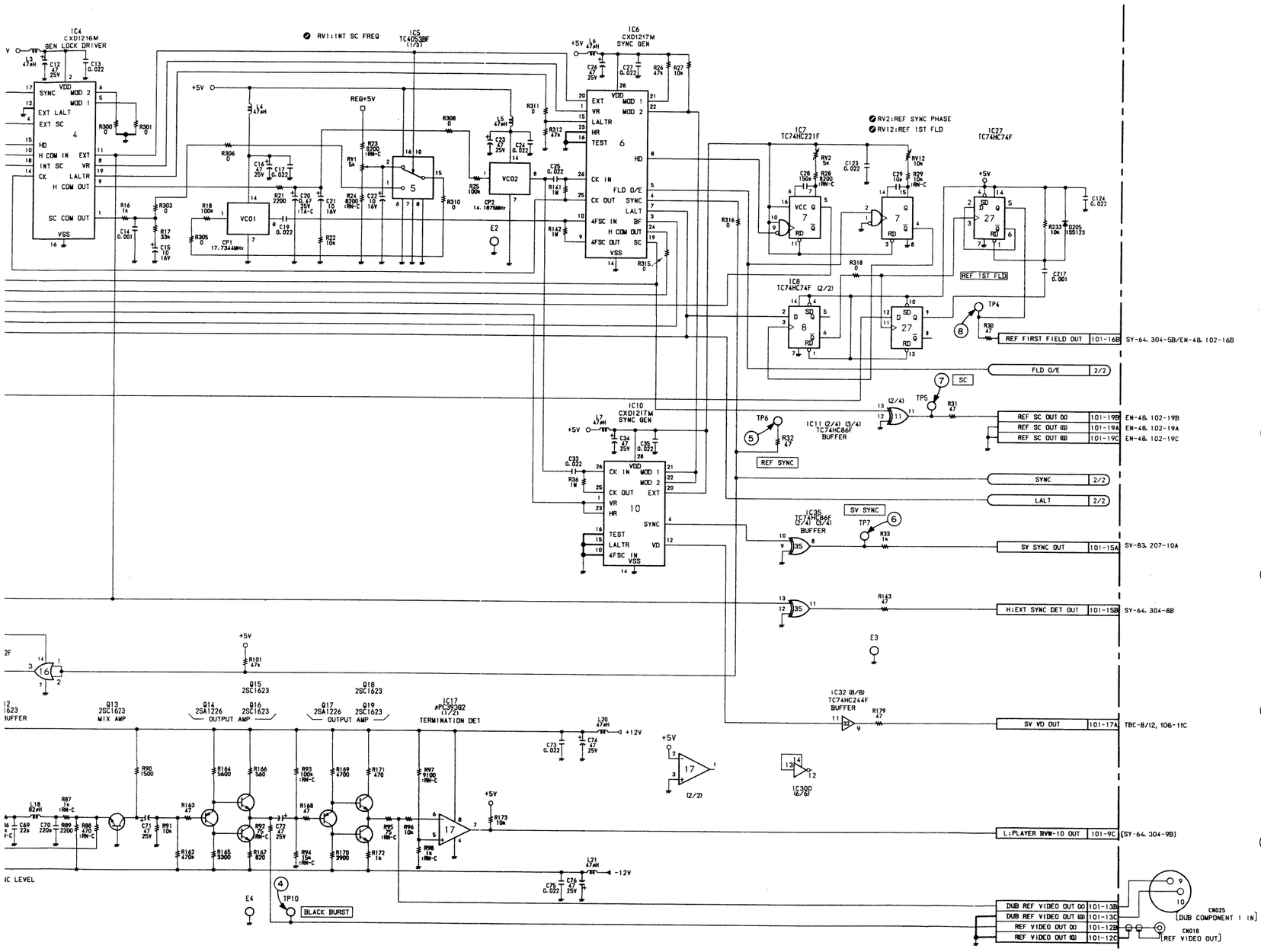


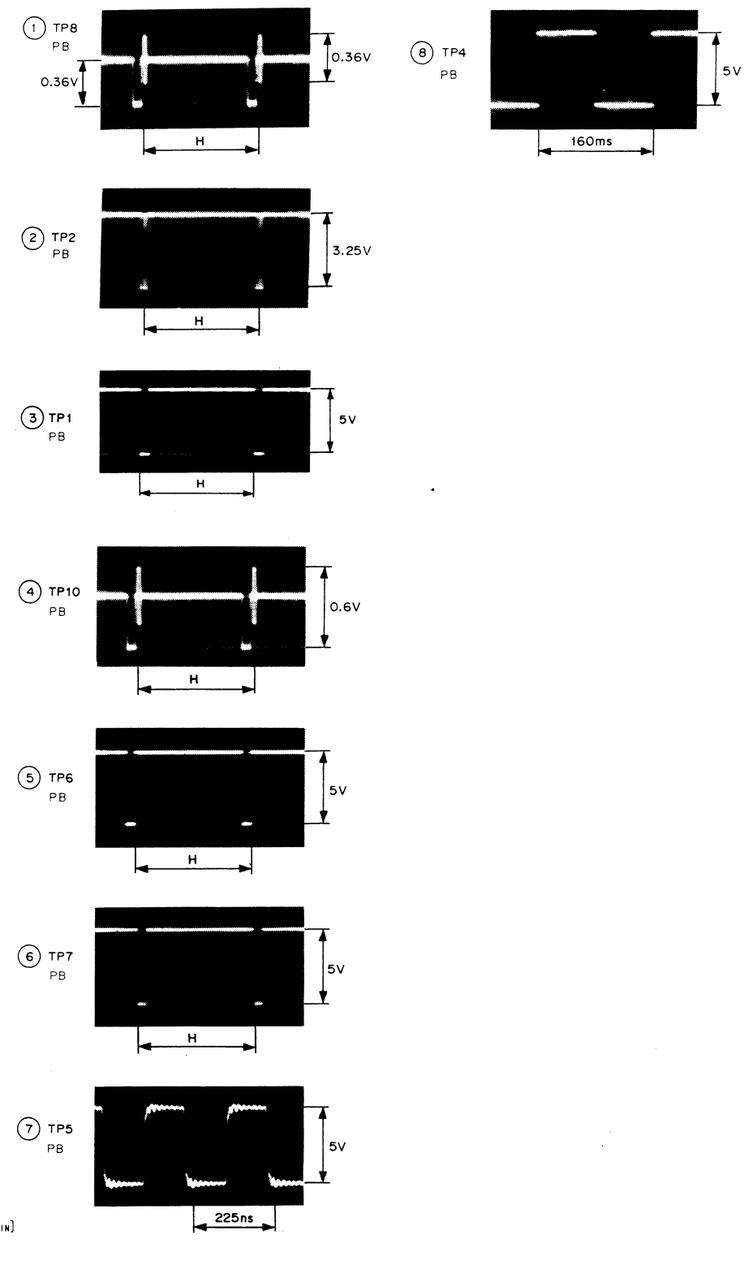


[ ];RECORDER ONLY

**TBC-9P(1/2)**
**1-622-550-13**
**BVW-60P BVW-70P**
**BVW-65P BVW-75P**
**BVW-95P BVW-96P**

## TBC-9P (2/2); TBC READ TIMING GENERATOR

S/N 10001 through 10060

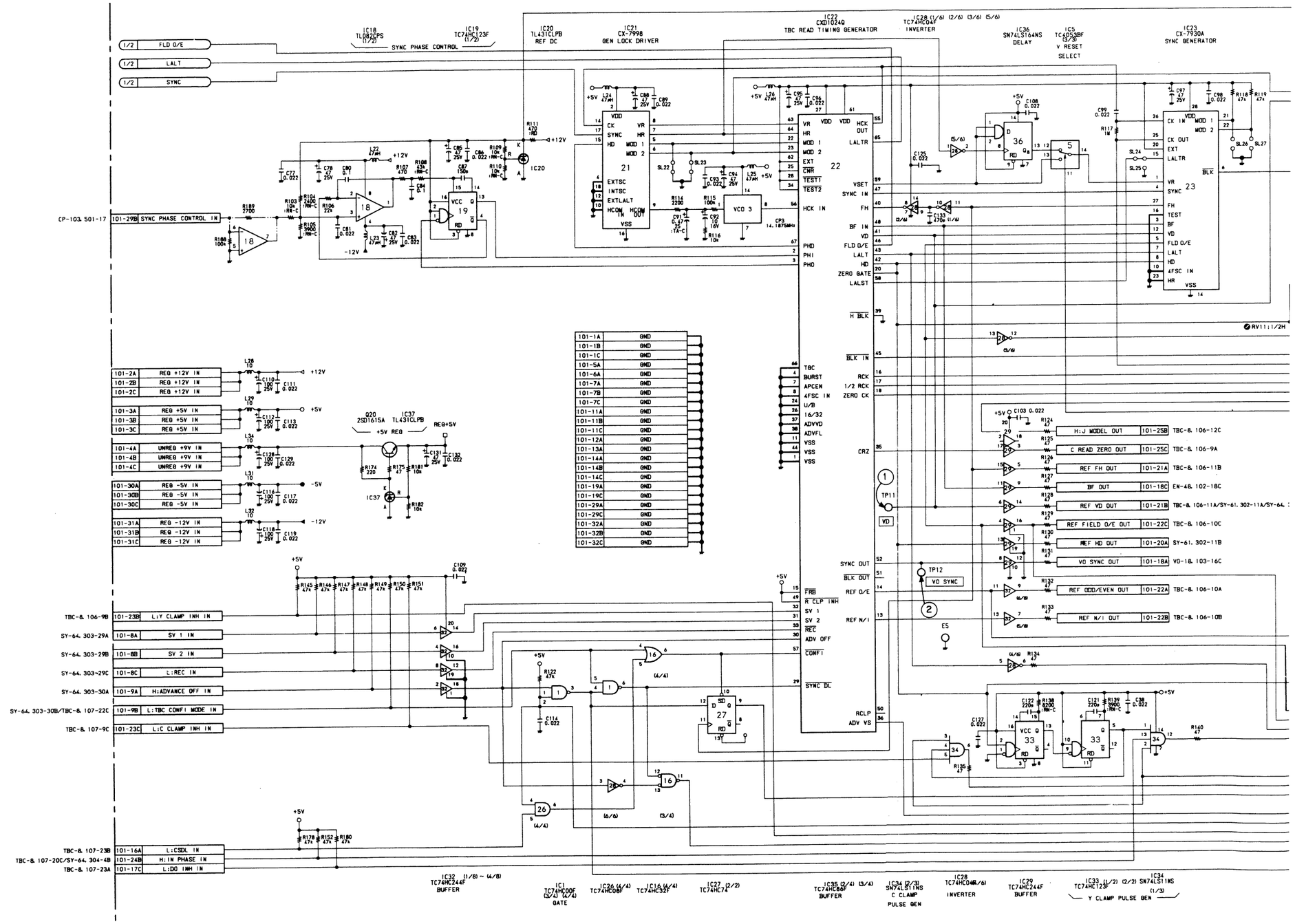


16-73 (a)　　16-74 (a)

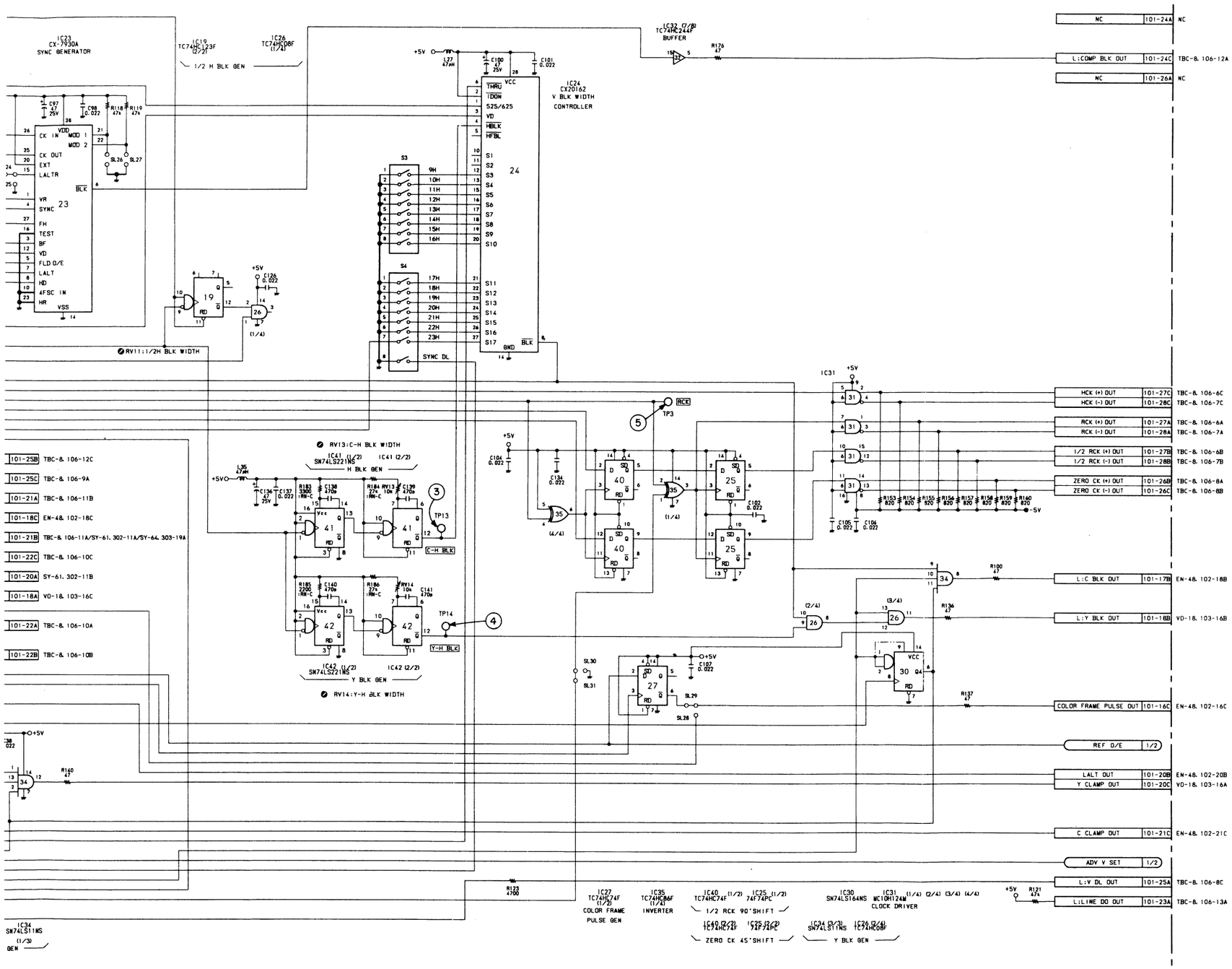


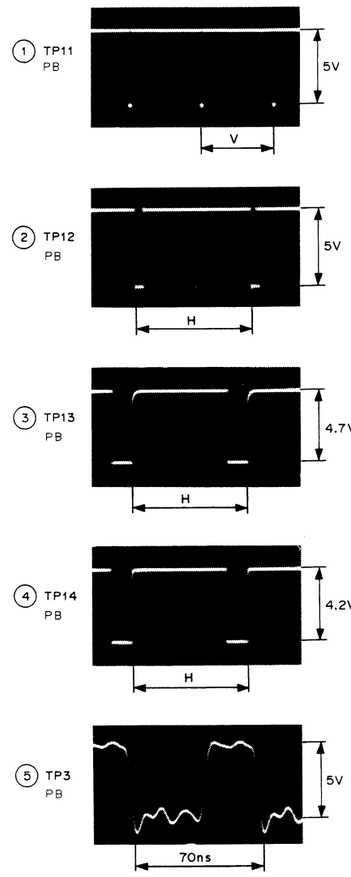


# TBC-9P (2/2)

1-622-550-12

BVW-60P BVW-95P
BVW-70P BVW-96P
BVW-75P

# TBC-9P (2/2); TBC READ TIMING GENERATOR

S/N 10061 and higher

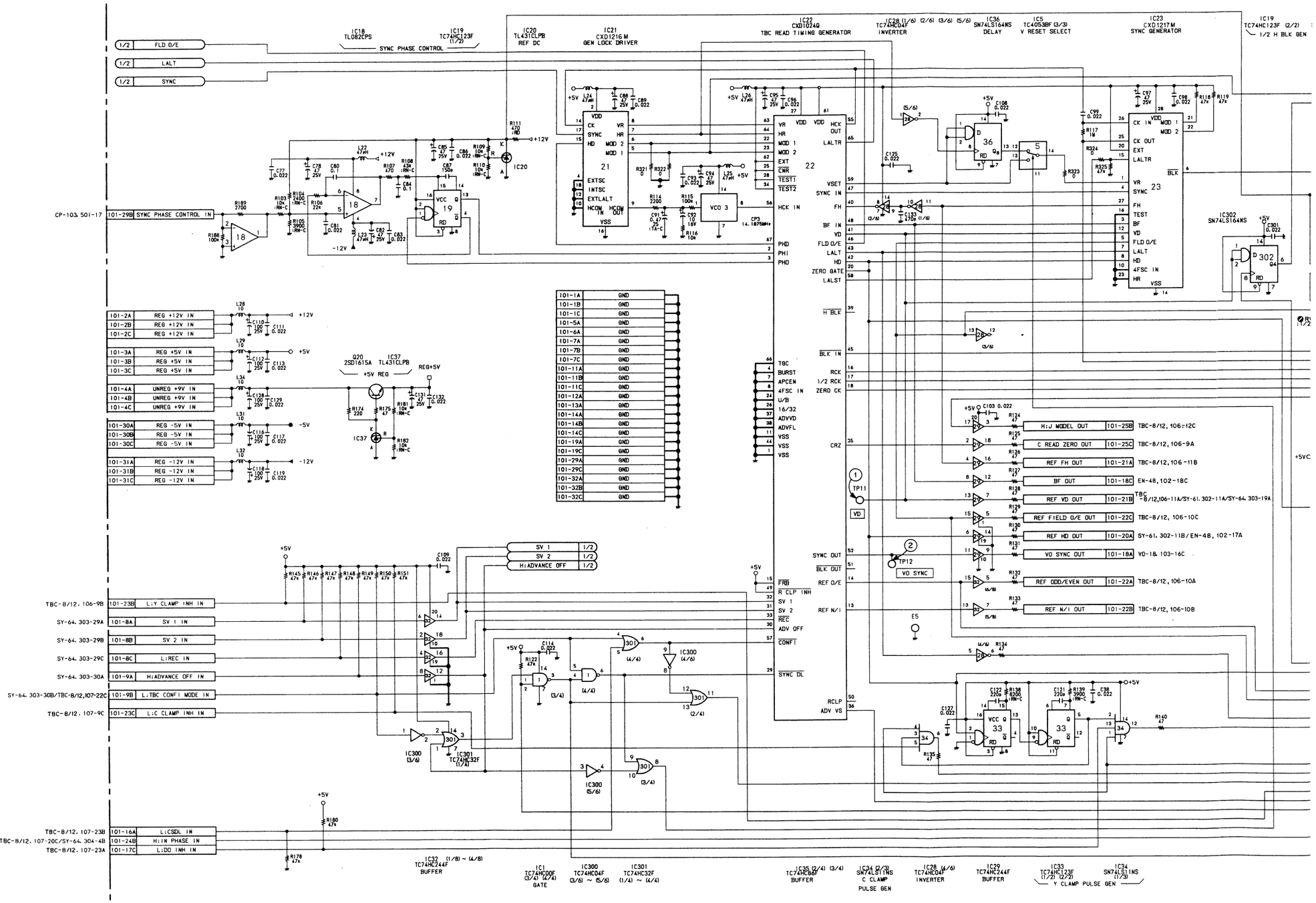


16-73 (b)　　16-74 (b)

TBC-9P (2/2)

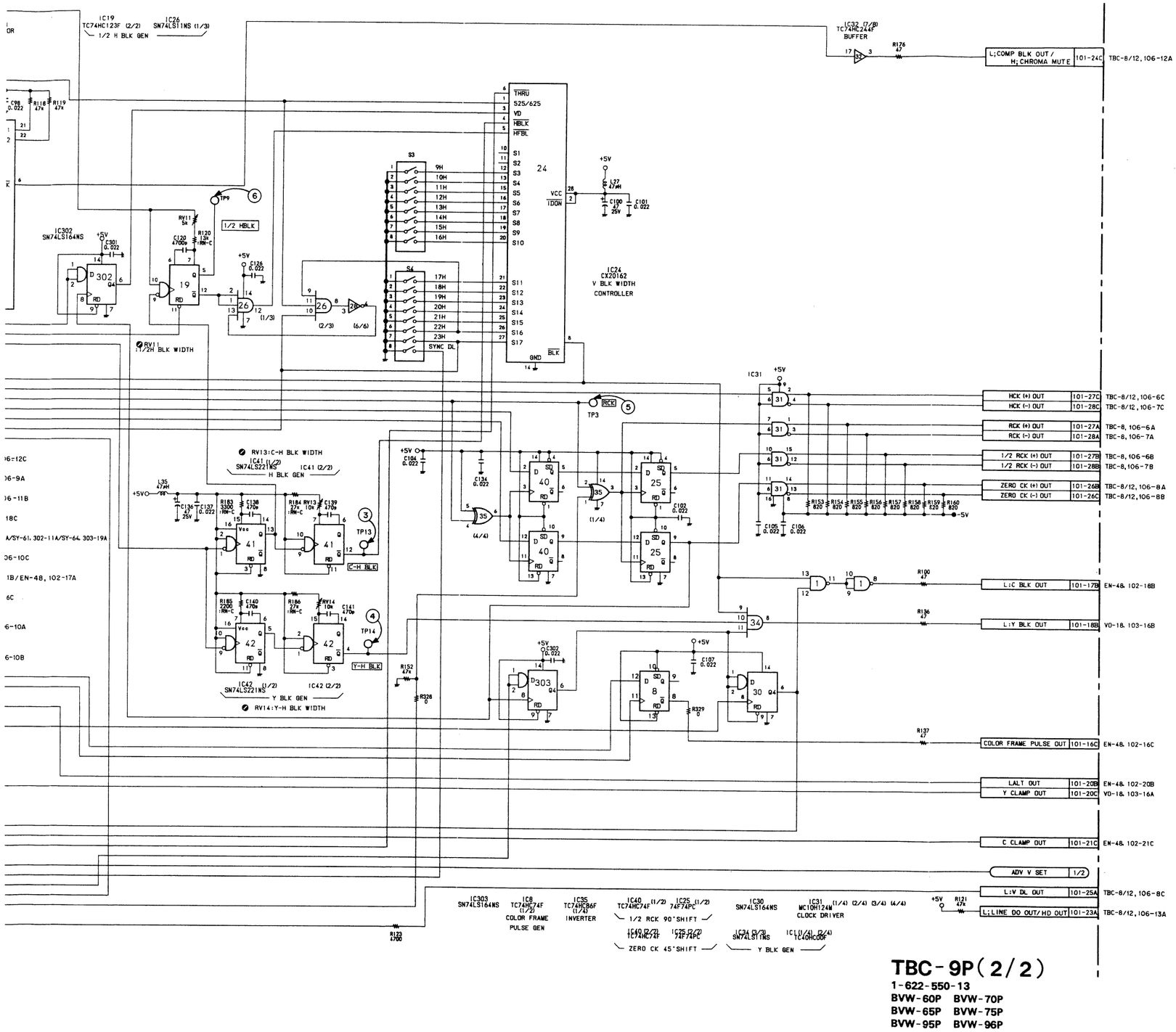


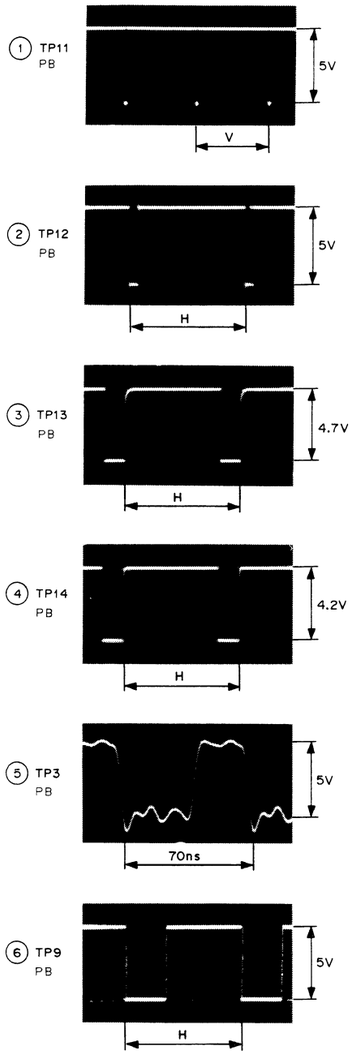


**TBC-9P(2/2)**
1-622-550-13
BVW-60P BVW-70P
BVW-65P BVW-75P
BVW-95P BVW-96P

16-75 (b)

16-76 (b)

I J K L M N O P

## EN-48P (1/3); C ENCODER

S/N 10001 through 10060

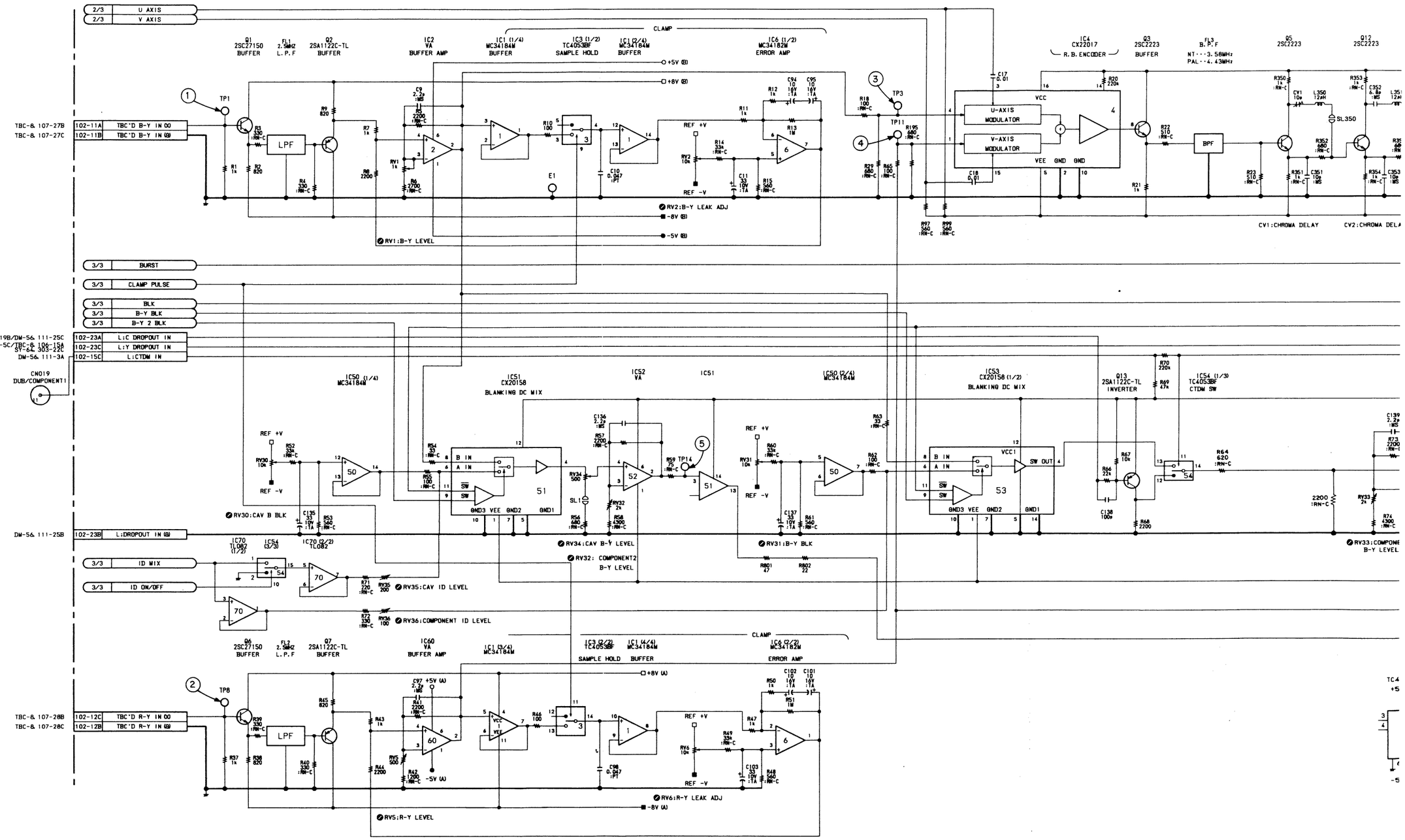


16-81 (a)

16-82 (a)

A B C D E F G H

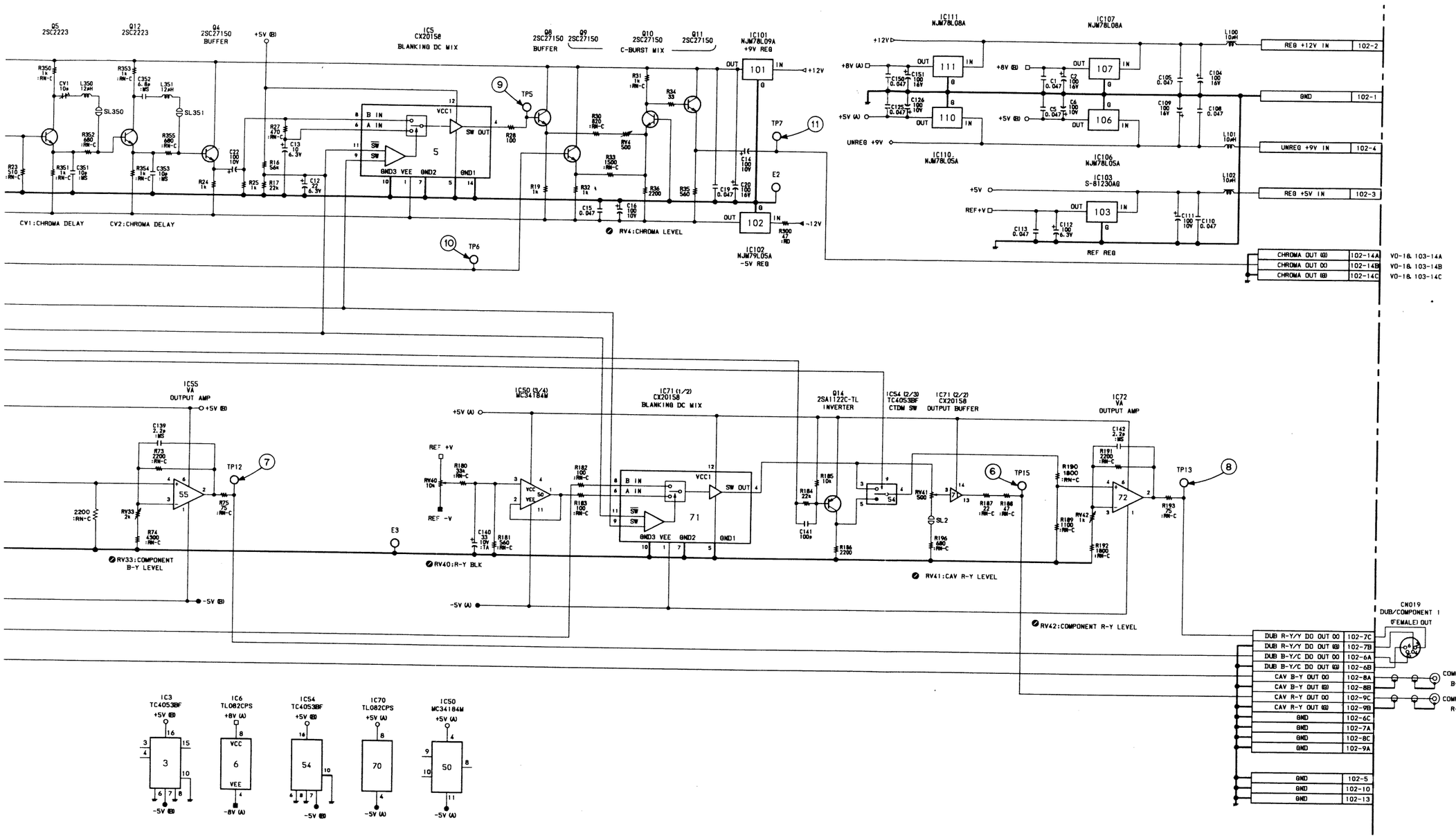





**EN-48P (1/3)**

1-622-546-13

BVW-60P BVW-75P
BVW-65P BVW-95P
BVW-70P BVW-96P

16-83 (a)

16-84 (a)

I J K L M N O P

## EN-48P (1/3); C ENCODER

S/N 10061 and higher

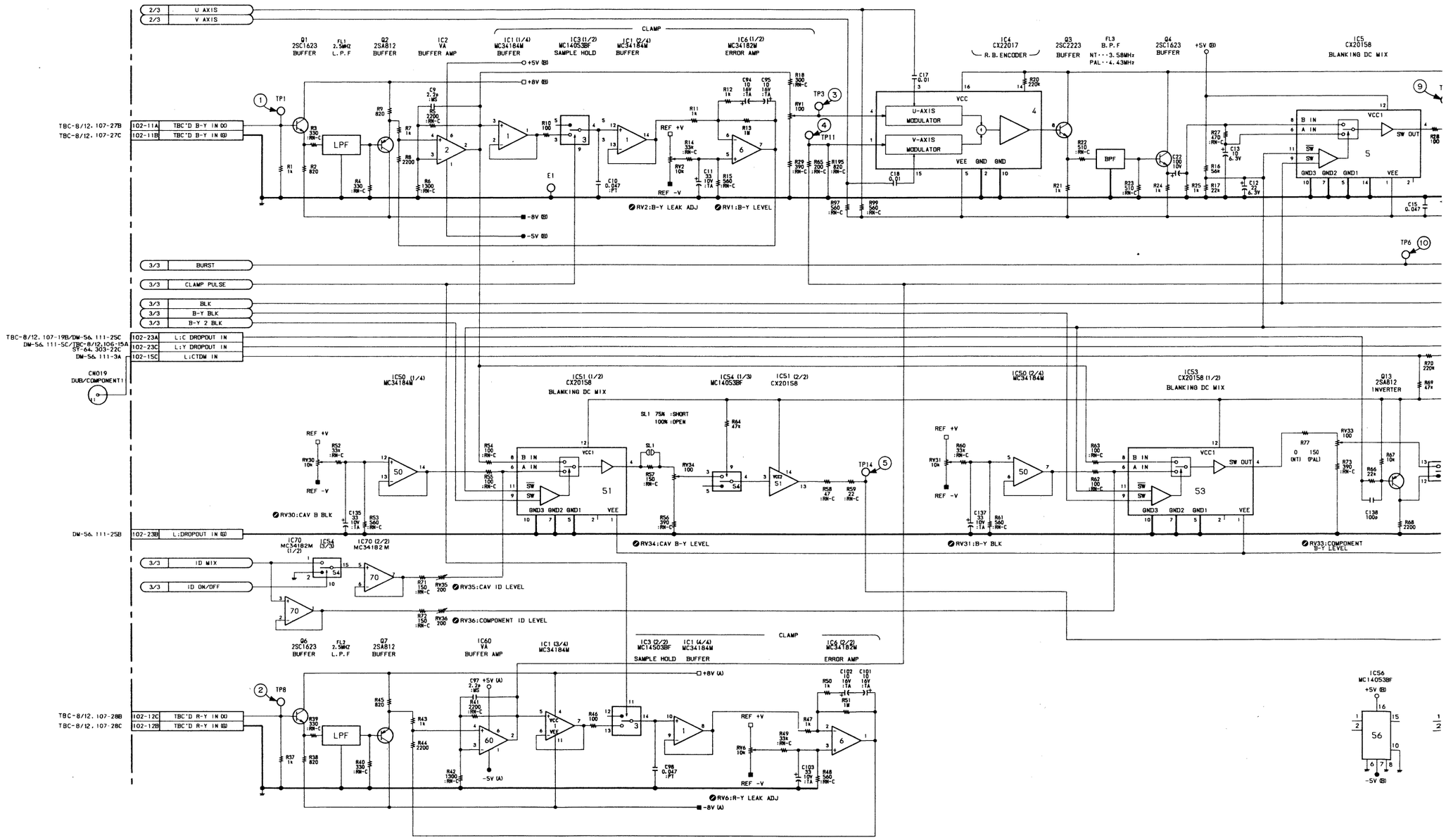


16-81 (b)

16-82 (b)

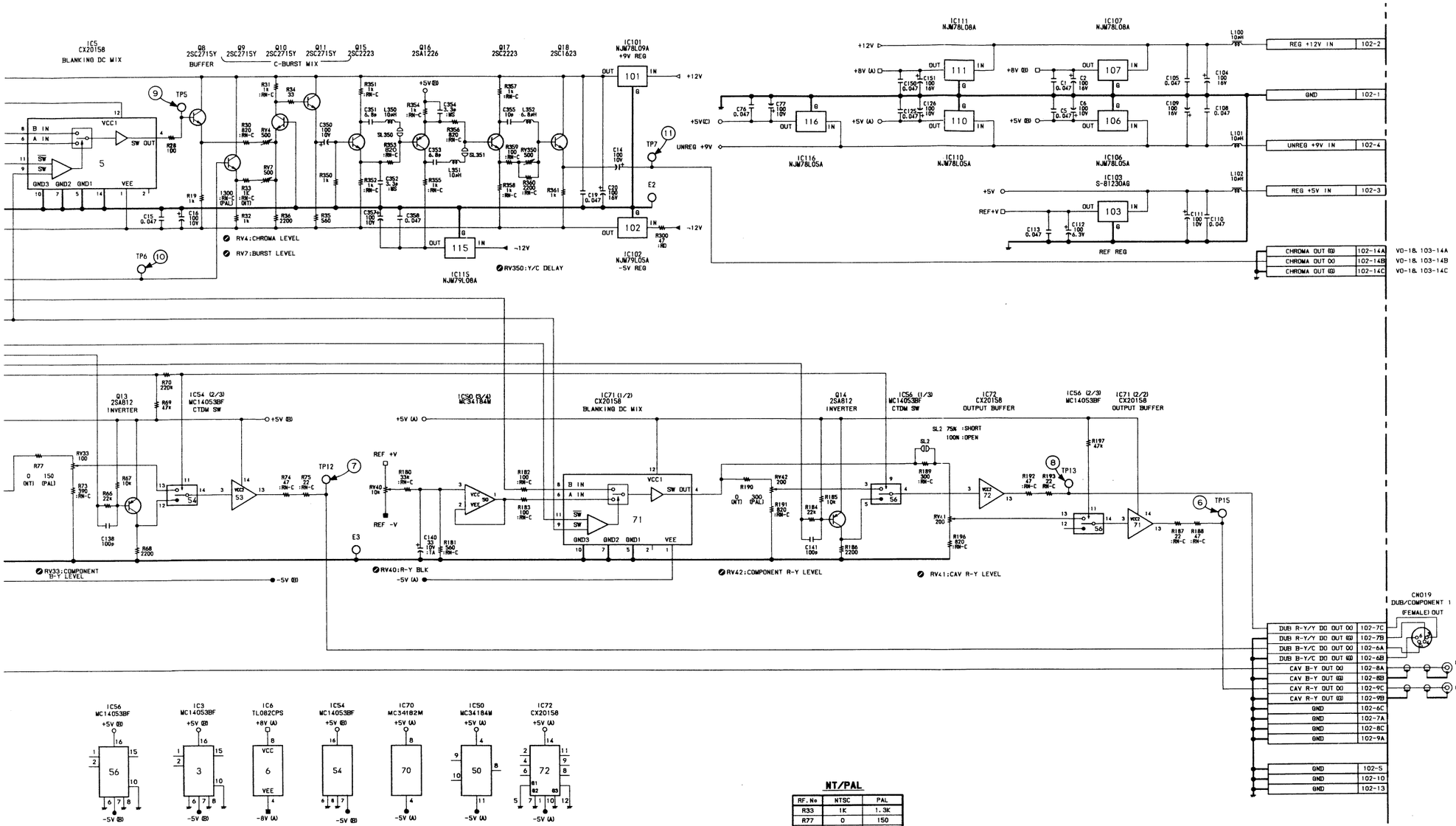





**NT/PAL**

| RF. No | NTSC | PAL |
|---|---|---|
| R33 | 1K | 1.3K |
| R77 | 0 | 150 |
| R190 | 0 | 300 |
| FL3 | 3.58MHz | 4.43MHz |
| SL1 | SHORT | OPEN |
| SL2 | SHORT | OPEN |
| SL350 | OPEN | OPEN |
| SL351 | SHORT | SHORT |

# EN-48P(1/3)

1-622-546-14, 15

BVW-60P BVW-70P
BVW-65P BVW-75P
BVW-95P BVW-96P

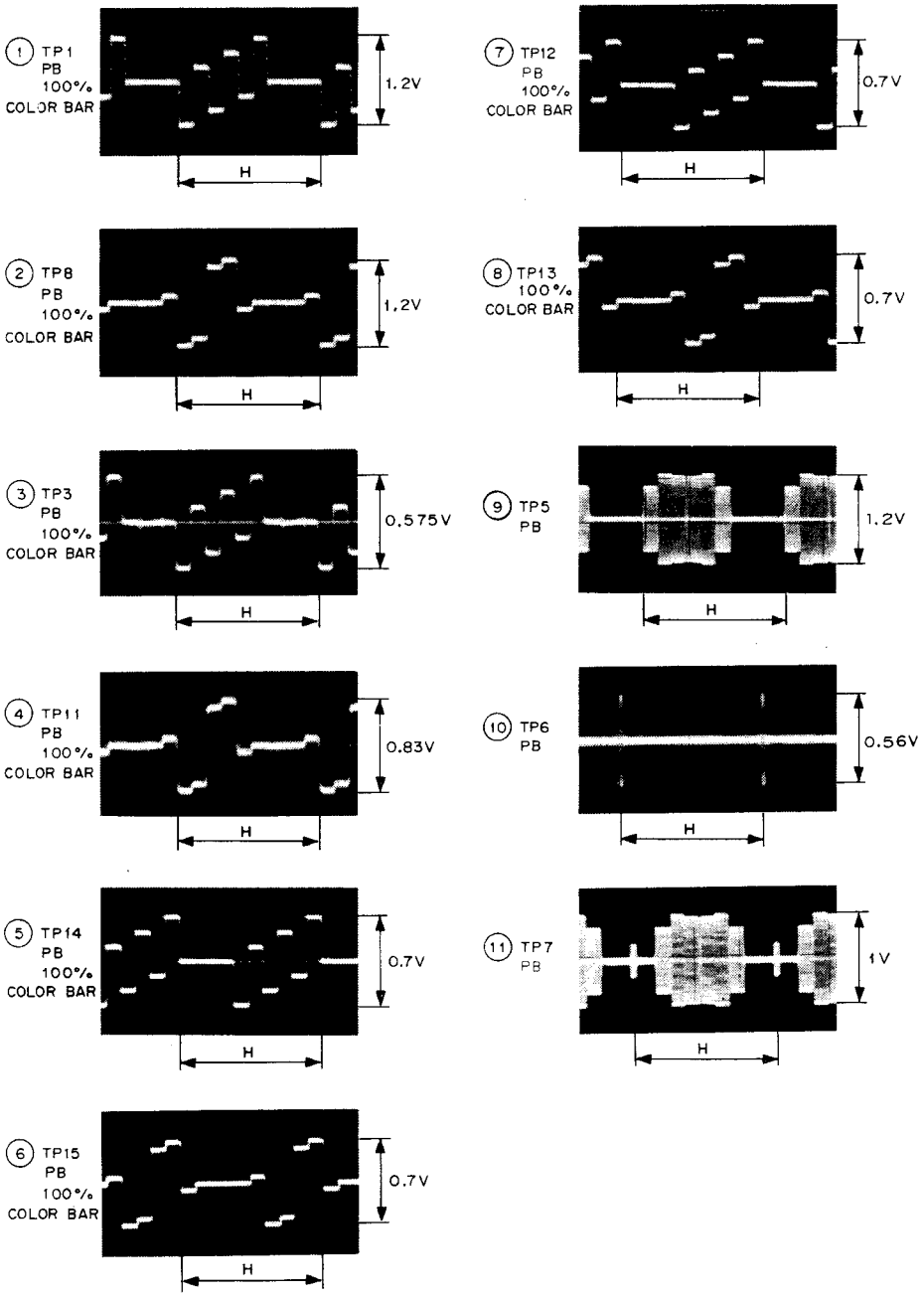
① TP1 PB 100% COLOR BAR
1.2V
H
② TP8 PB 100% COLOR BAR
1.2V
H
③ TP3 PB 100% COLOR BAR
0.575V
H
④ TP11 PB 100% COLOR BAR
0.83V
H
⑤ TP14 PB 100% COLOR BAR
0.7V
H
⑥ TP15 PB 100% COLOR BAR
0.7V
H
⑦ TP12 PB 100% COLOR BAR
0.7V
H
⑧ TP13 100% COLOR BAR
0.7V
H
⑨ TP5 PB
1.2V
H
⑩ TP6 PB
0.56V
H
⑪ TP7 PB
1V
H

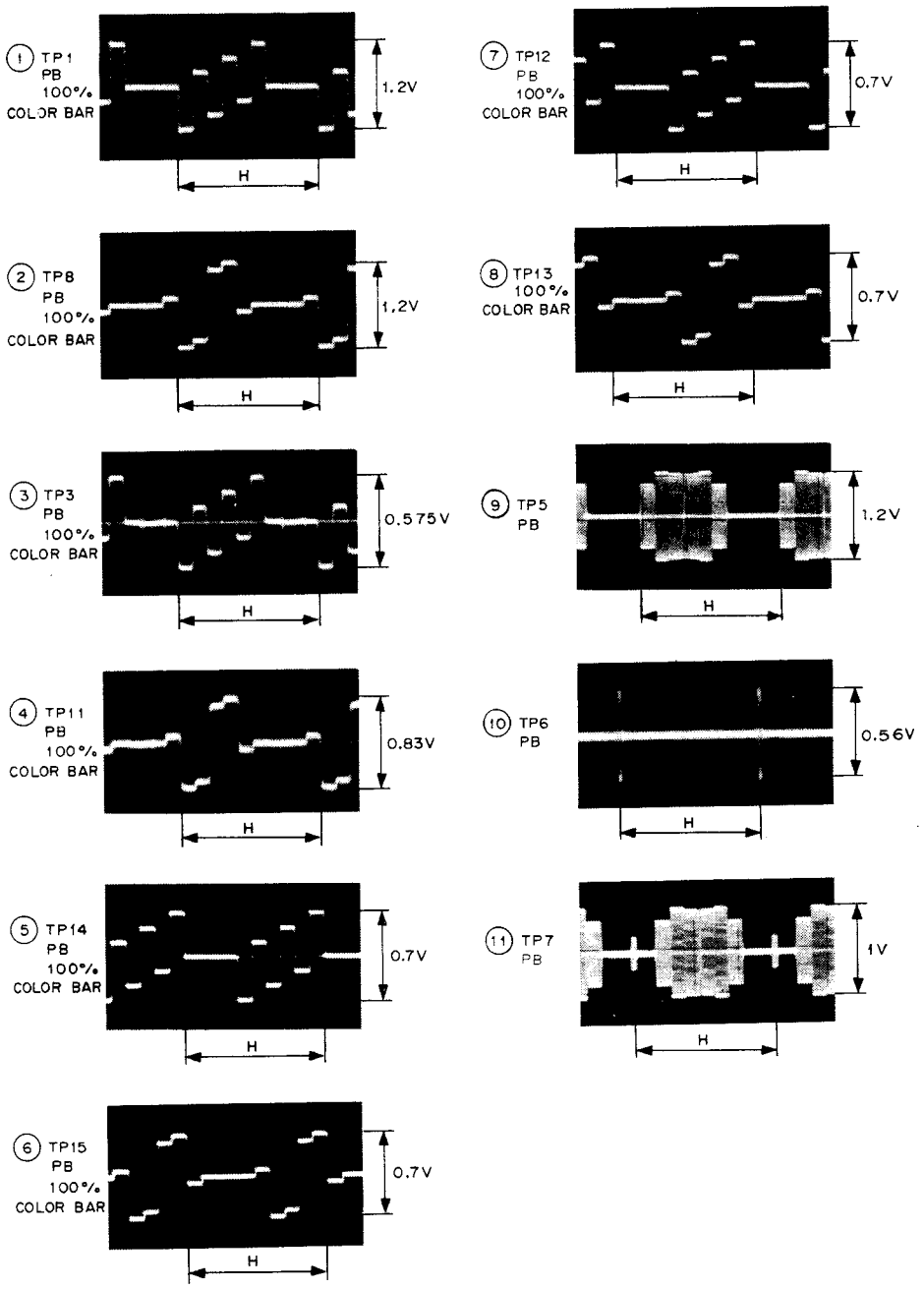
① TP1
PB
100%
COLOR BAR
1.2V
H
② TP8
PB
100%
COLOR BAR
1.2V
H
③ TP3
PB
100%
COLOR BAR
0.575V
H
④ TP11
PB
100%
COLOR BAR
0.83V
H
⑤ TP14
PB
100%
COLOR BAR
0.7V
H
⑥ TP15
PB
100%
COLOR BAR
0.7V
H
⑦ TP12
PB
100%
COLOR BAR
0.7V
H
⑧ TP13
100%
COLOR BAR
0.7V
H
⑨ TP5
PB
1.2V
H
⑩ TP6
PB
0.56V
H
⑪ TP7
PB
1V
H

## EN-48P (2/3); SC GENERATOR

S/N 10001 through 10060

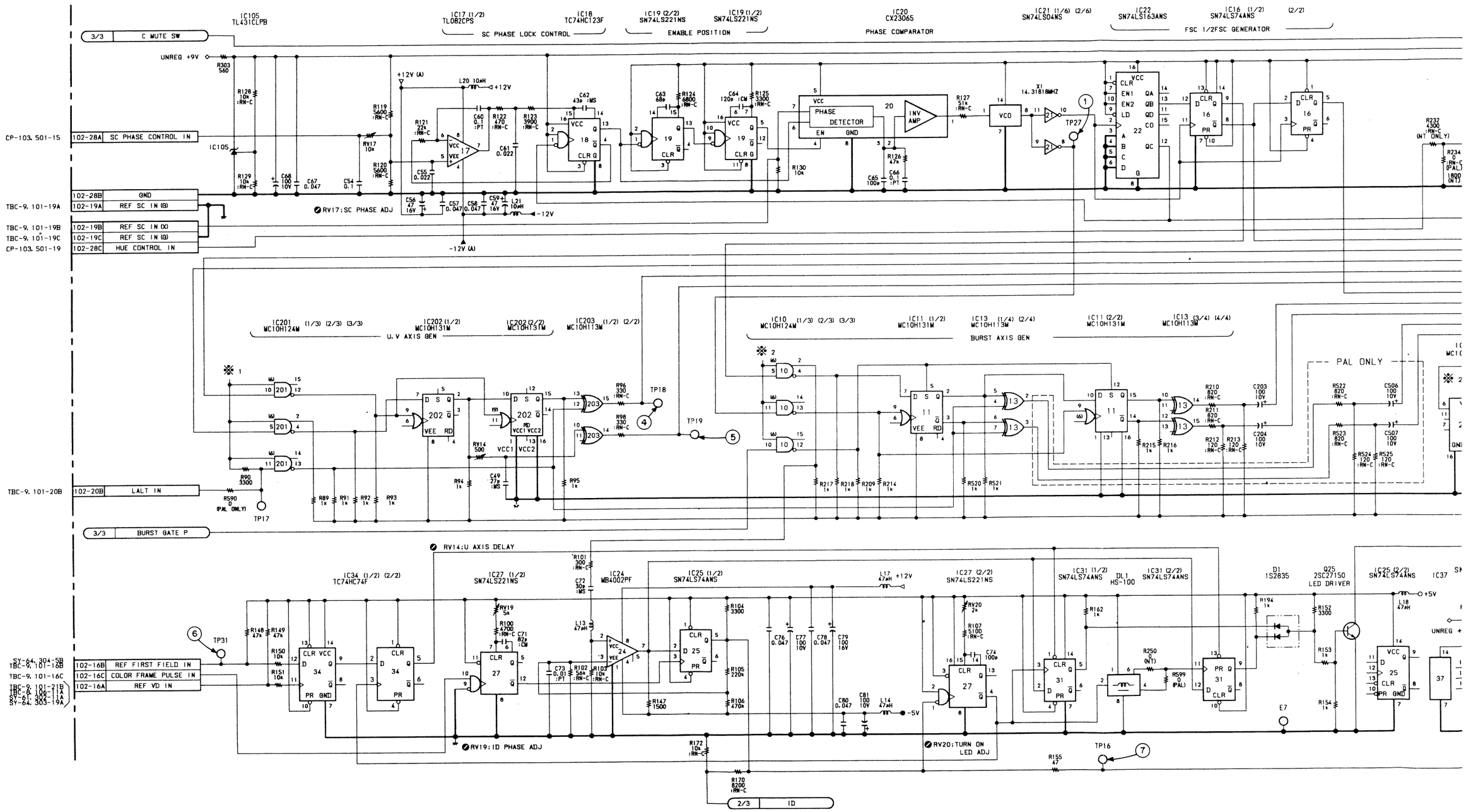


16-89 (a)　16-90 (a)

A B C D E F G H

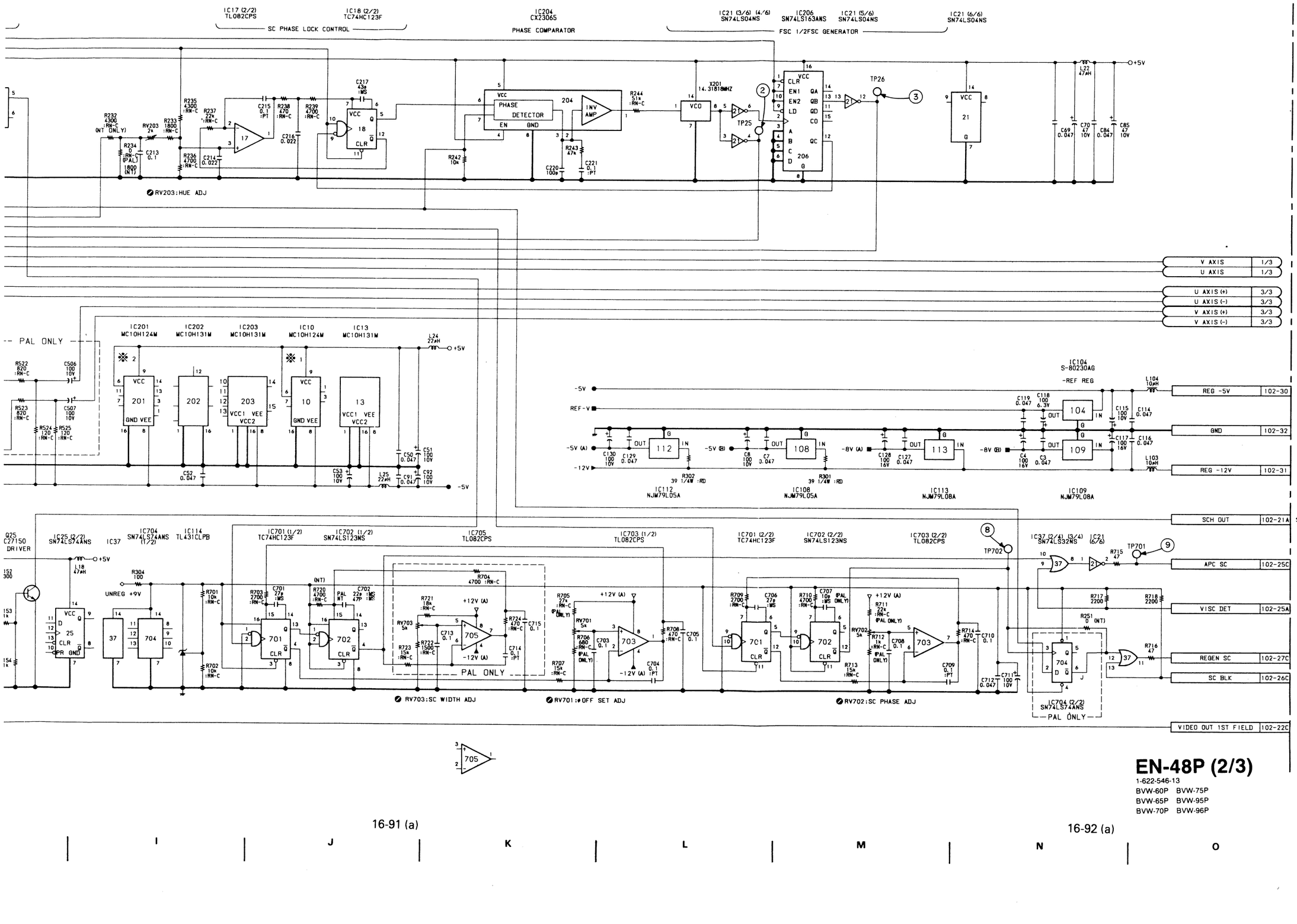


# EN-48P (2/3)

1-622-546-13

BVW-60P BVW-75P
BVW-65P BVW-95P
BVW-70P BVW-96P

# EN-48P (2/3); SC GENERATOR

S/N 10061 and higher

NOTE

| MARK | CHANGE INFORMATION | SERIAL NO. |
|---|---|---|
| *1 | R235 3300 →3900<br>R245 6800 ADDED<br>R246 18k ADDED<br>TH201 S-10K ADDED | S/N 10171 ~ |
| *2 | C62 22pF → 8.2pF | S/N 10713 ~ |
| *3 | C706 27pF → 8.2pF | S/N 10928 ~ |
| *4 | C701 27pF → 10pF | S/N 10948 ~ |

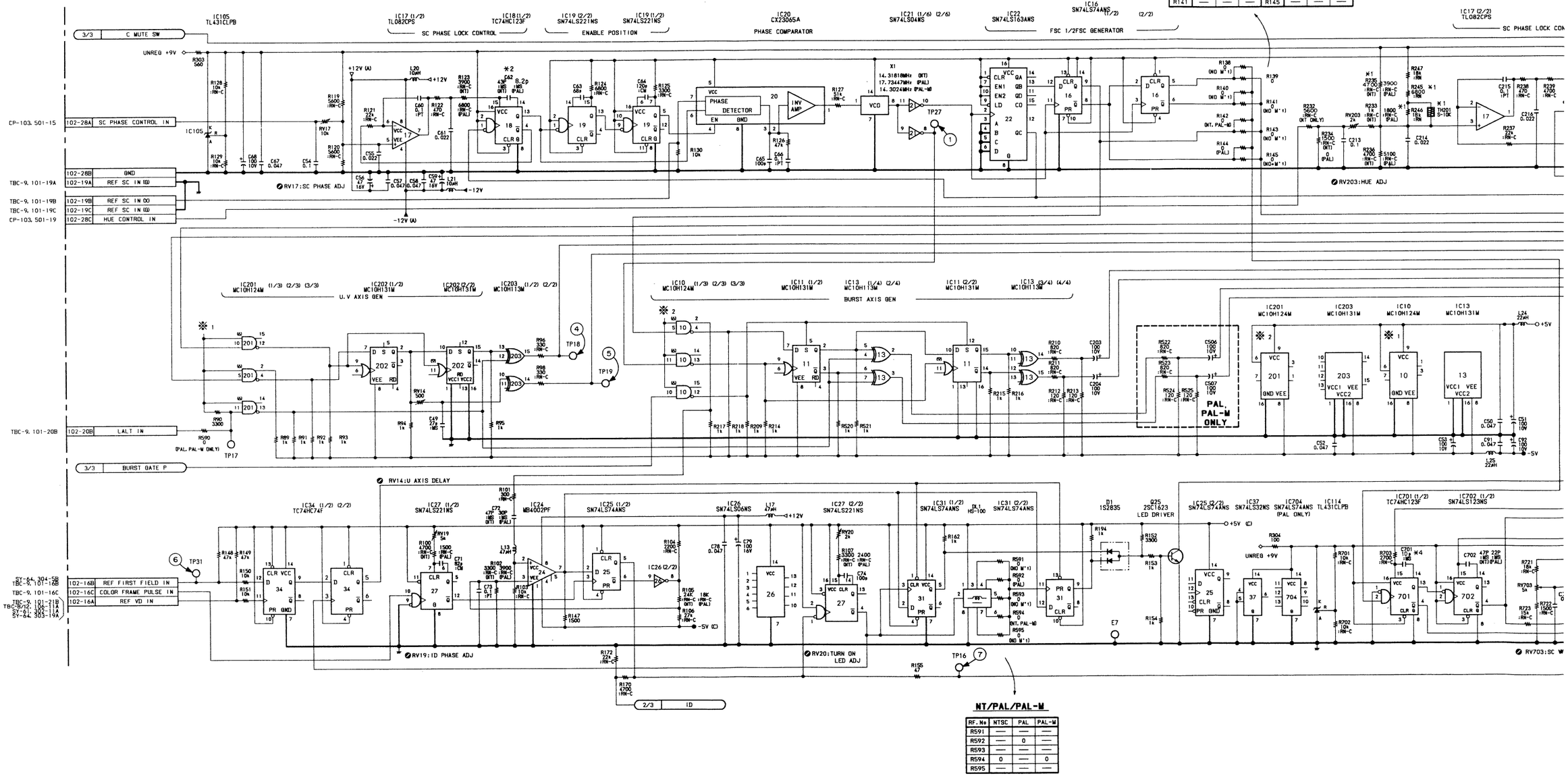

EN-48P (2/3)

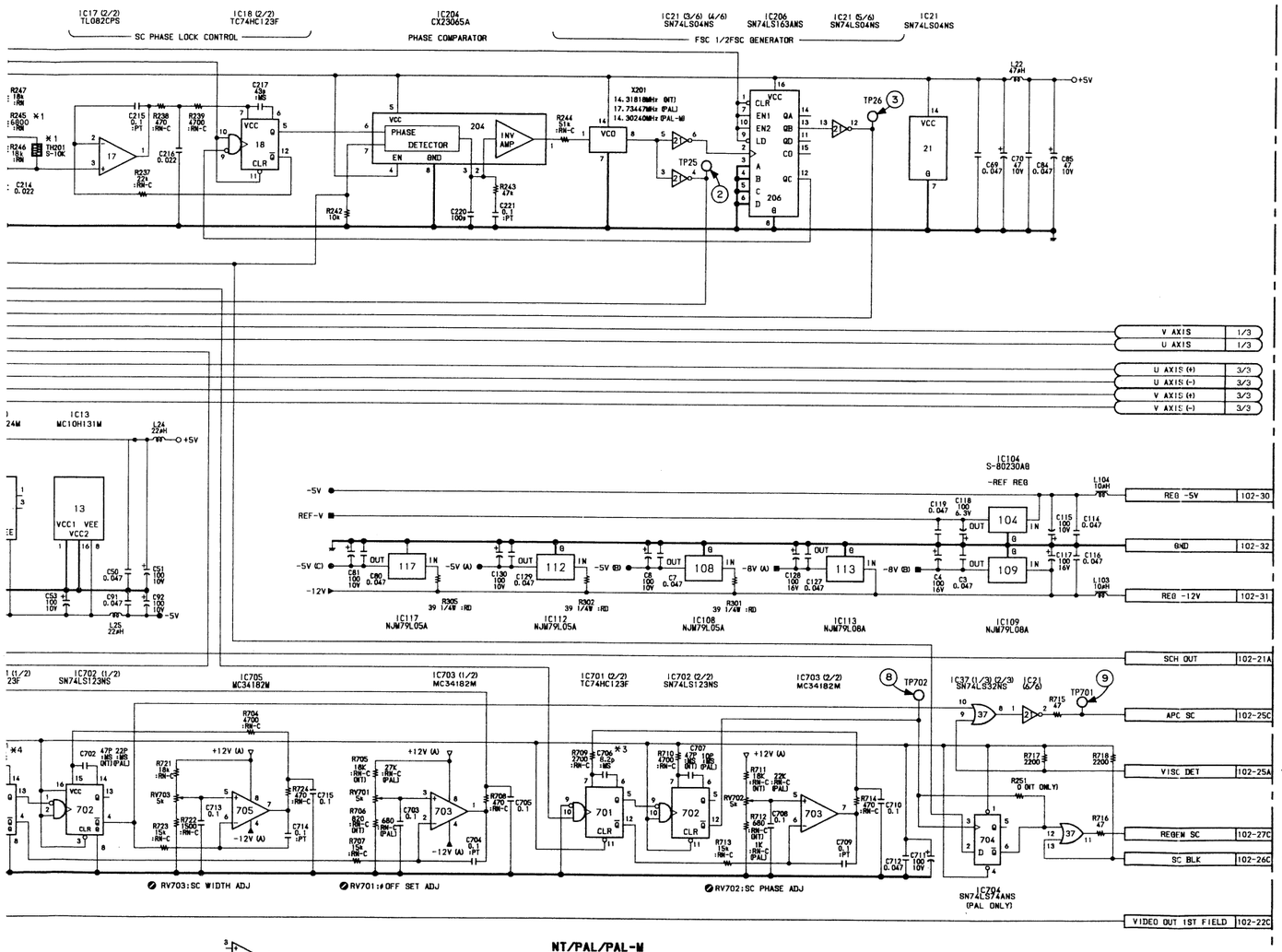

**NT/PAL/PAL-M**

| RF. No | NTSC | PAL | PAL-M | RF. No | NTSC | PAL | PAL-M | RF. No | NTSC | PAL | PAL-M | RF. No | NTSC | PAL | PAL-M |
|---|---|---|---|---|---|---|---|---|---|---|---|---|---|---|---|
| C62 | 43P | 22P | 43P | R100 | 4.7K | 1.5K | 4.7K | R232 | 4.3K | — | — | R590 | — | 0 | 0 |
| C72 | 47P | 30P | 47P | R102 | 3.3K | 3.9K | 3.3K | R233 | 3.3K | 1.8K | 1K | R705 | 18K | 27K | 18K |
| C702 | 47P | 22P | 47P | R105 | 24K | 18K | 24K | R234 | 1.8K | 0 | 1.5K | R706 | 820 | 680 | 820 |
| C707 | 47P | 10P | 47P | R107 | 3.3K | 2.4K | 3.3K | R235 | 5.6K | 3.3K | 4.7K | R711 | 18K | 22K | 18K |
| | | | | R123 | 3.9K | 6.8K | 3.9K | R236 | 4.7K | 5.1K | 4.7K | R712 | 680 | 1K | 680 |
| IC704 | — | SN74LS74ANS | — | | | | | R251 | 0 | — | 0 | | | | |
| X1 | 14.31MHz | 17.73MHz | 14.30MHz | | | | | | | | | | | | |
| X201 | 14.31MHz | 17.73MHz | 14.30MHz | | | | | | | | | | | | |

**EN-48P(2/3)**
**1-622-546-14, 15**
**BVW-60P BVW-70P**
**BVW-65P BVW-75P**
**BVW-95P BVW-96P**

① TP27 PB — 4V, 56.5 ns

② TP25 PB — 4V, 56.5ns

③ TP26 PB — 4V, 225ns

④ TP18 PB — 0.55V, 225ns

⑤ TP19 PB — 0.55V, 225ns

⑥ TP31 PB — 5V

⑦ TP16 PB — 3.5V, V

⑧ TP702 PB — 4V, 225ns

⑨ TP701 PB — 3.5V, 225ns

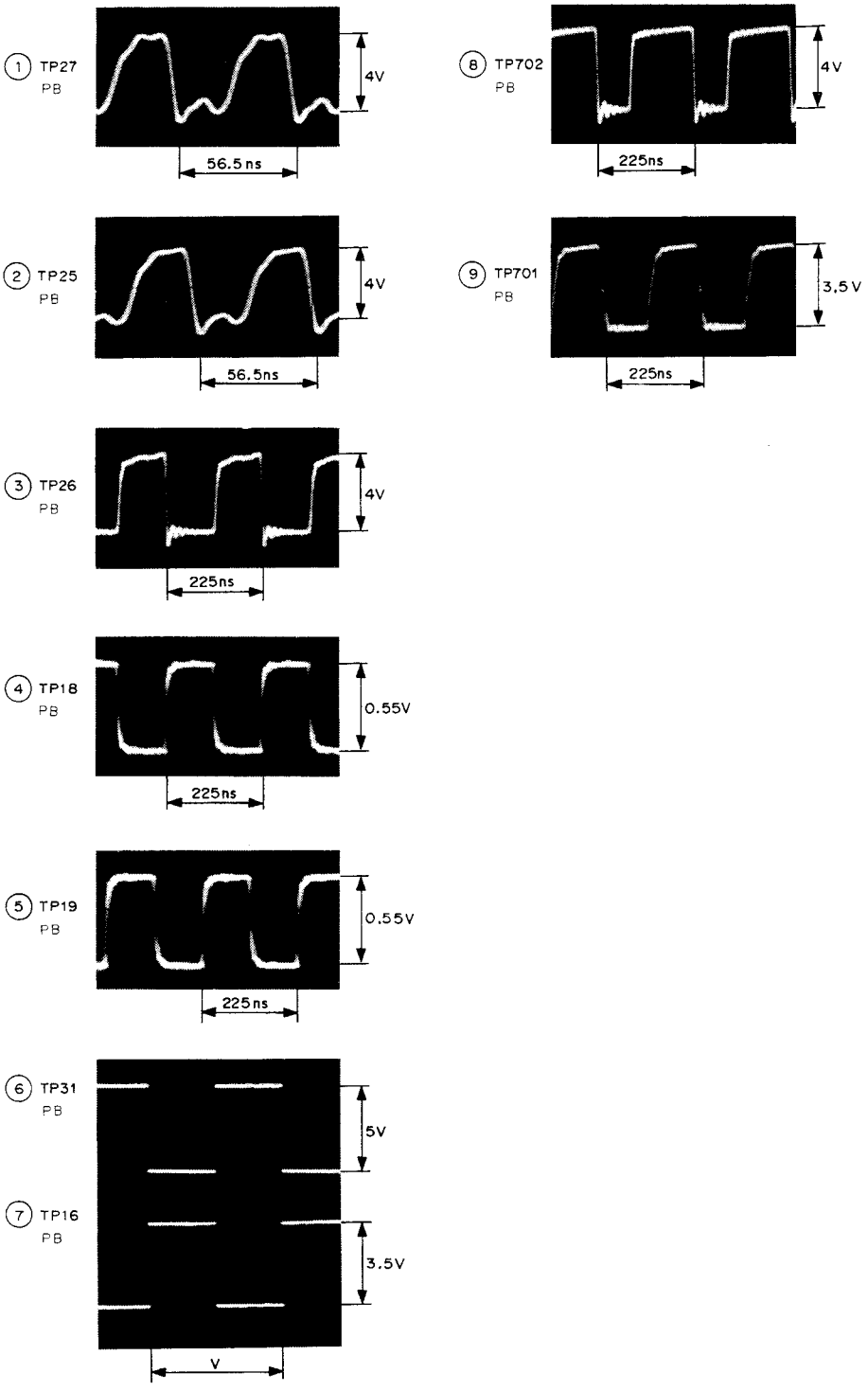
1 TP27
PB
4V
56.5ns
8 TP702
PB
4V
225ns
2 TP25
PB
4V
56.5ns
9 TP701
PB
3.5V
225ns
3 TP26
PB
4V
225ns
4 TP18
PB
0.55V
225ns
5 TP19
PB
0.55V
225ns
6 TP31
PB
5V
7 TP16
PB
3.5V
V

## EN-48P (3/3) ; C BLK/BURST GENERATOR

S/N 10001 through 10060

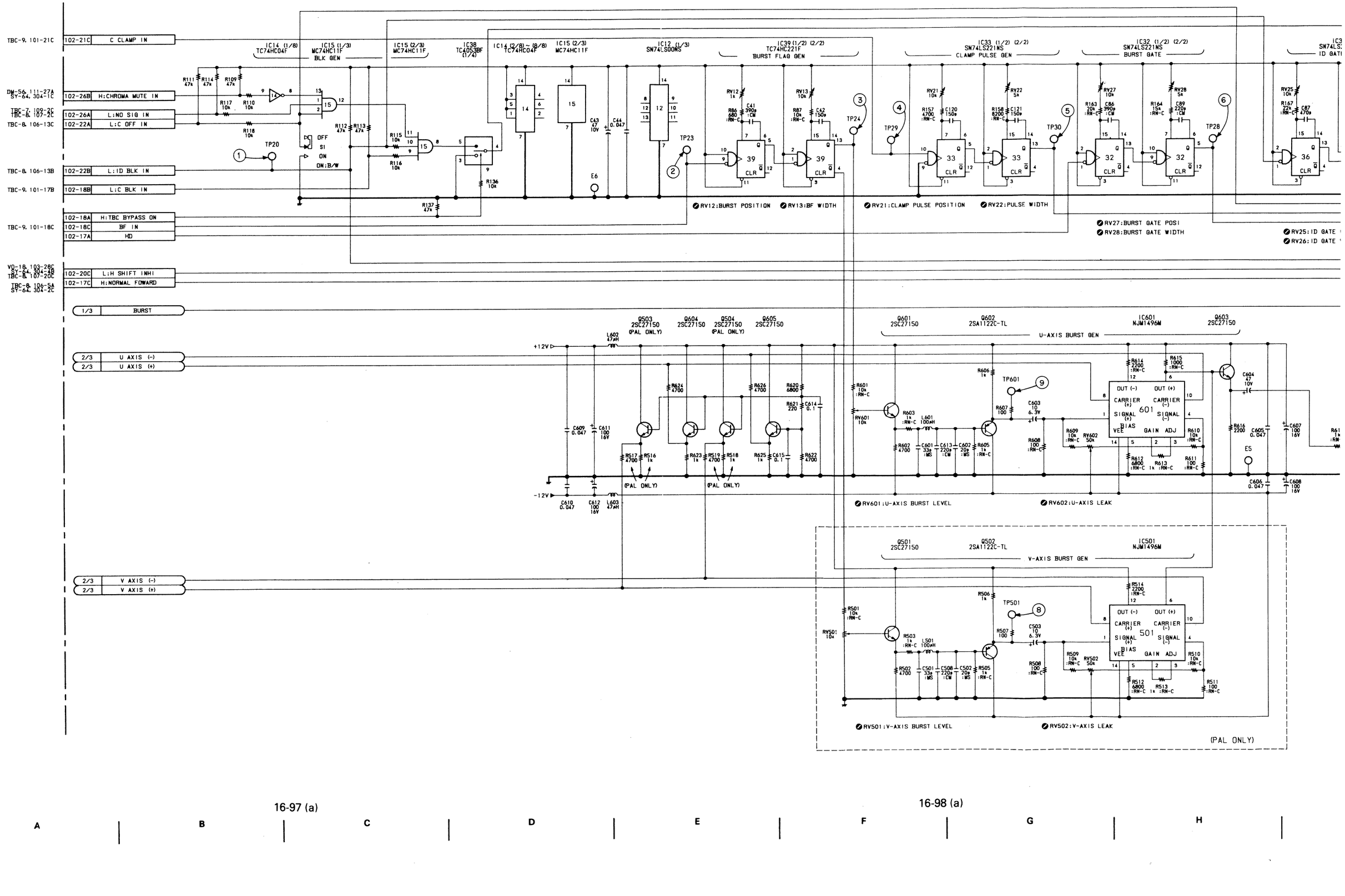


16-97 (a)

16-98 (a)

A　B　C　D　E　F　G　H

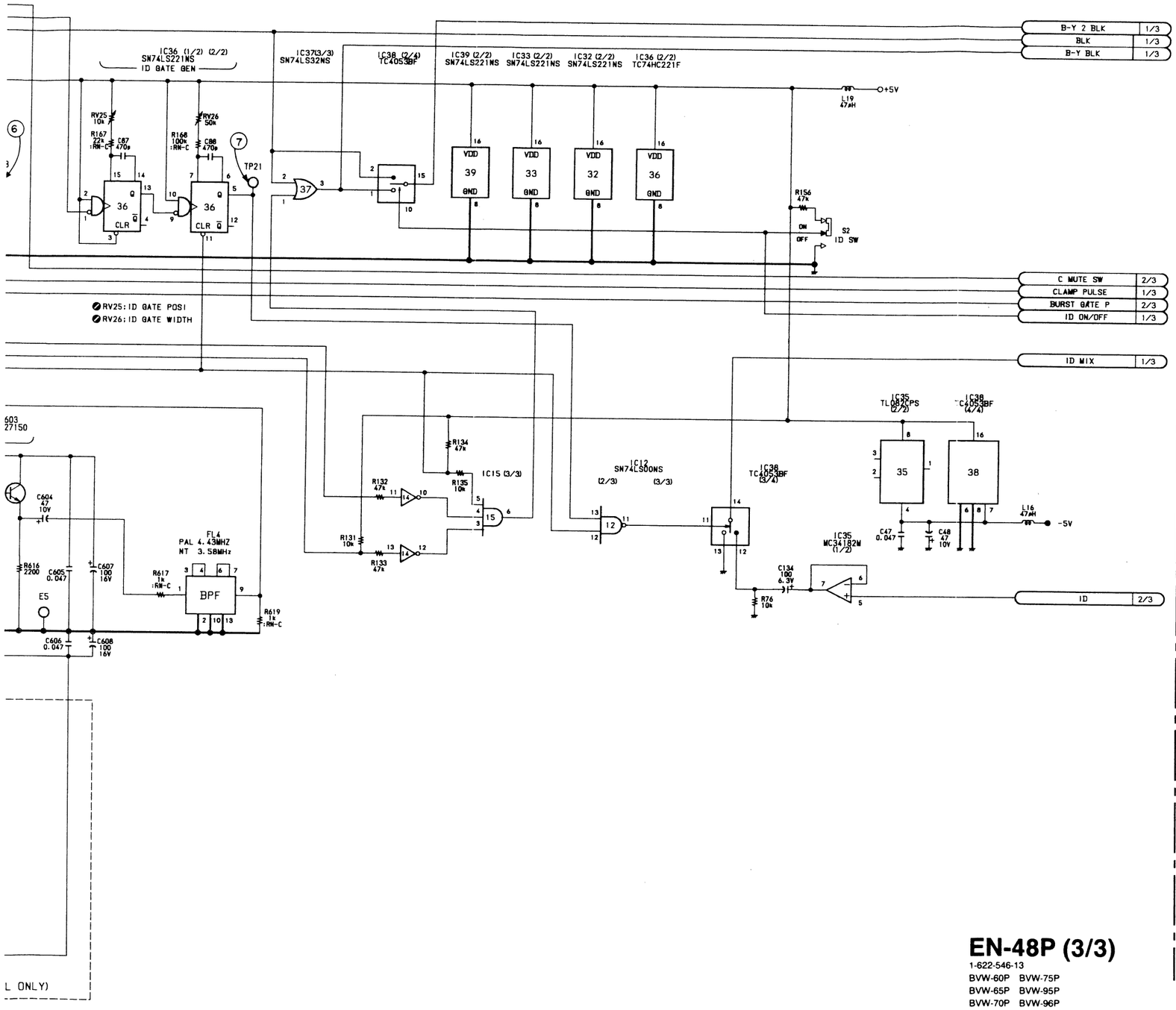


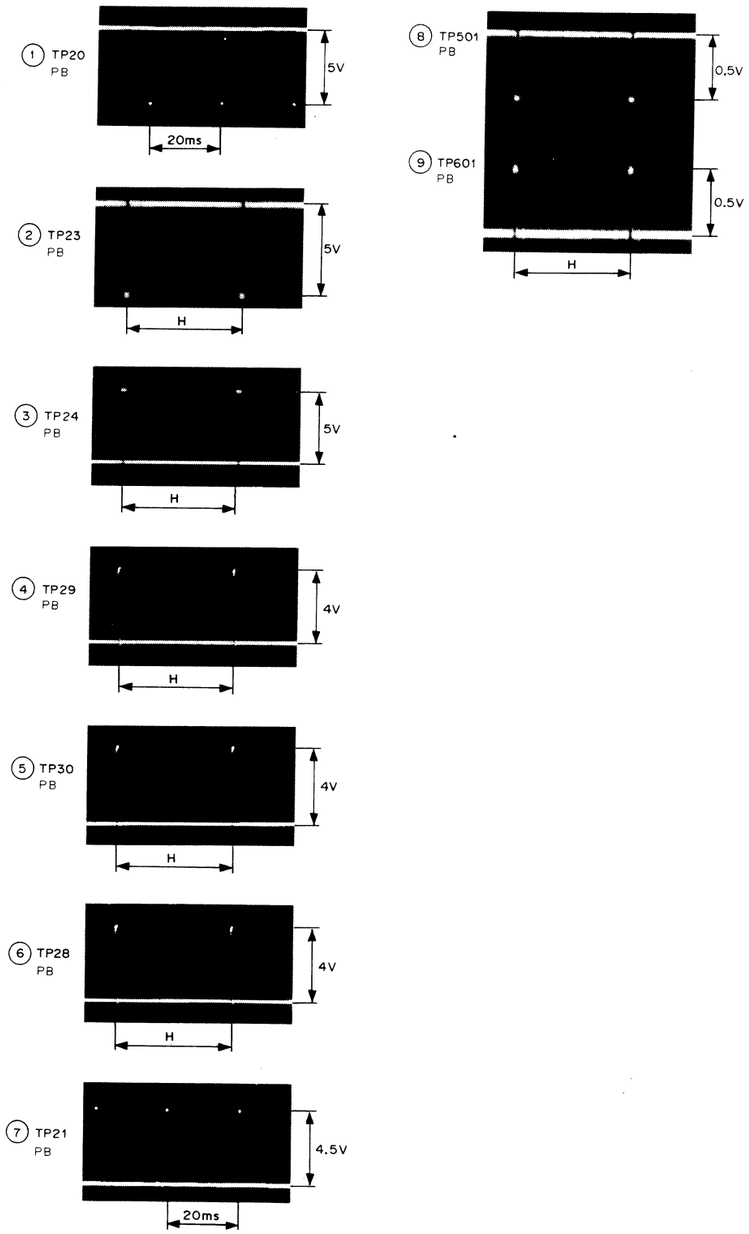


**EN-48P (3/3)**

1-622-546-13

BVW-60P BVW-75P
BVW-65P BVW-95P
BVW-70P BVW-96P

16-99 (a)

16-100 (a)

I J K L M N O P

## EN-48P (3/3) ; C BLK/BURST GENERATOR

S/N 10061 and higher

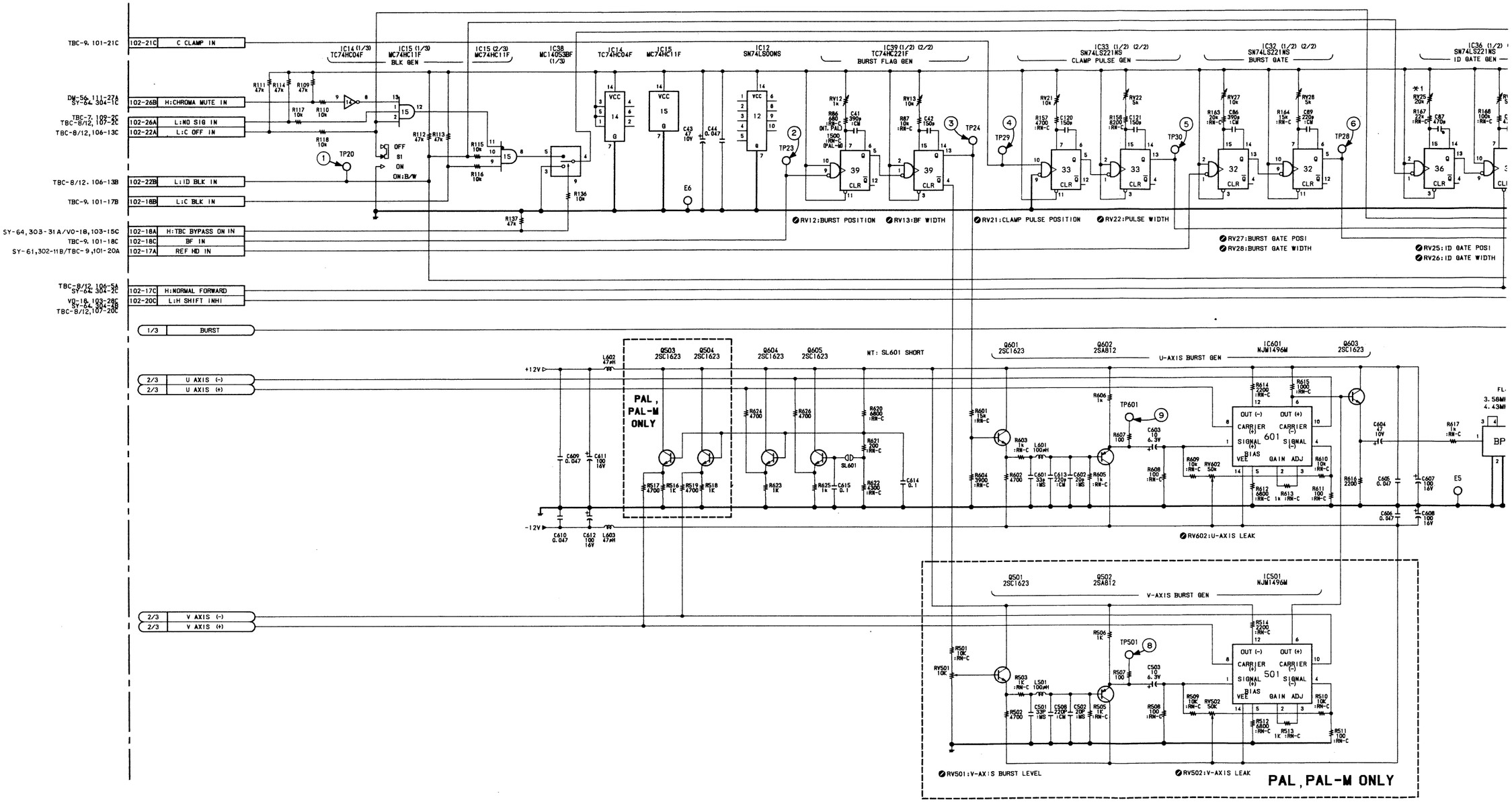


NOTE

| MARK | CHANGE INFORMATION | SERIAL NO. |
|---|---|---|
| *1 | RV25 10k → 20k | S/N 10928 ~ |

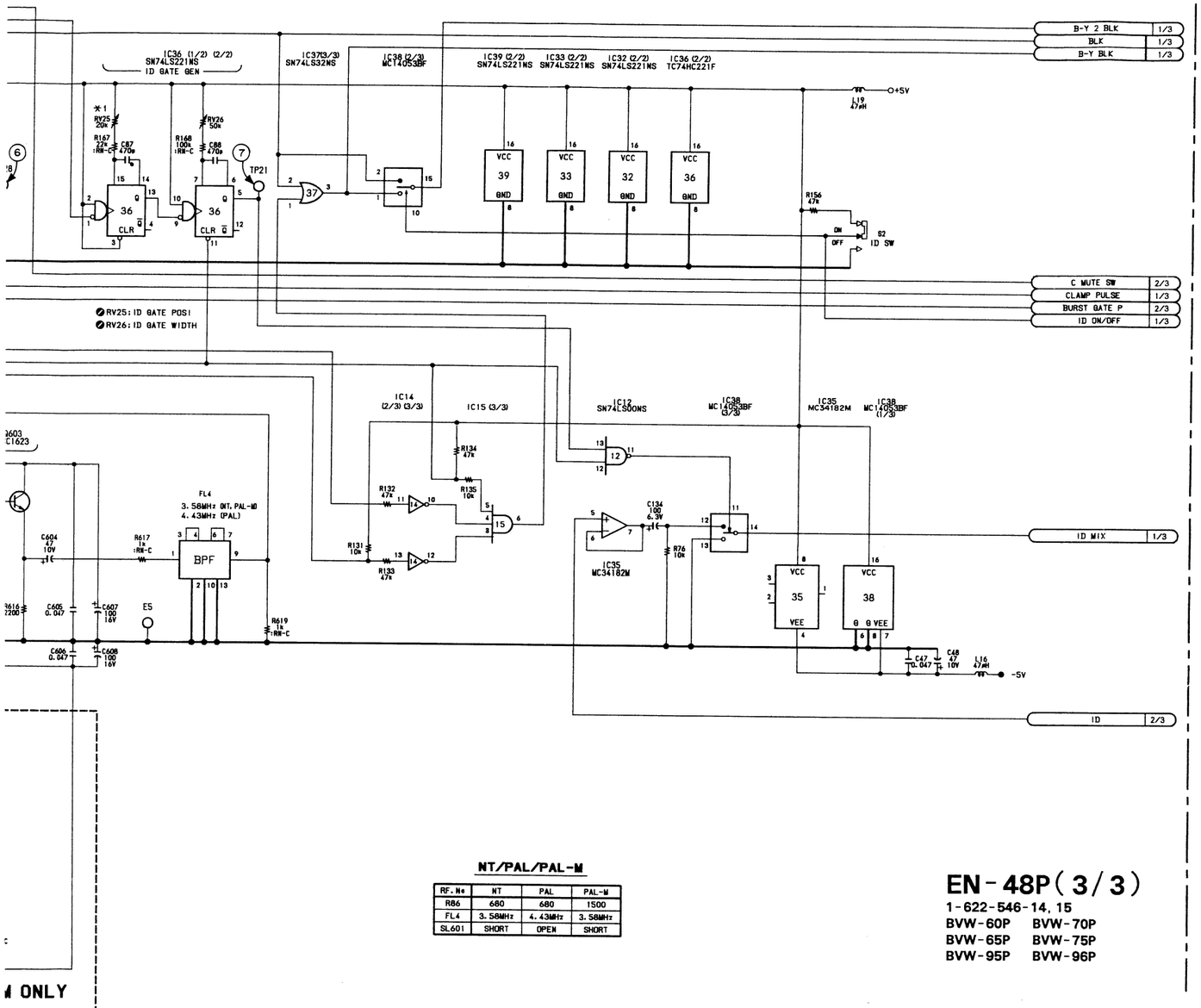


**NT/PAL/PAL-M**

| RF. No | NT | PAL | PAL-M |
|---|---|---|---|
| R86 | 680 | 680 | 1500 |
| FL4 | 3.58MHz | 4.43MHz | 3.58MHz |
| SL601 | SHORT | OPEN | SHORT |

**EN-48P (3/3)**
1-622-546-14, 15
BVW-60P BVW-70P
BVW-65P BVW-75P
BVW-95P BVW-96P

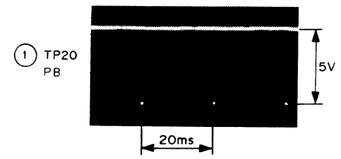


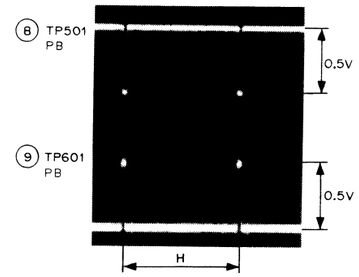


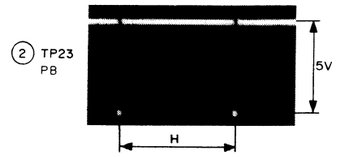


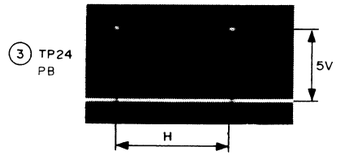


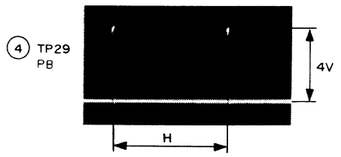


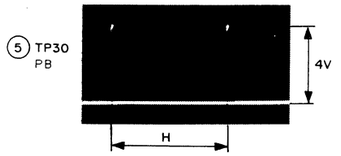


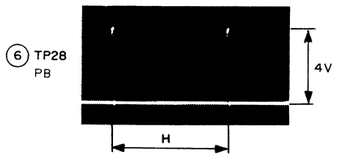


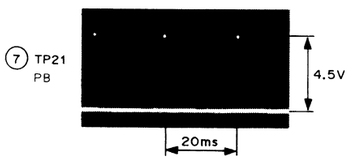

## VO-18AP (1/3); VIDEO OUTPUT

S/N 10001 through 10060

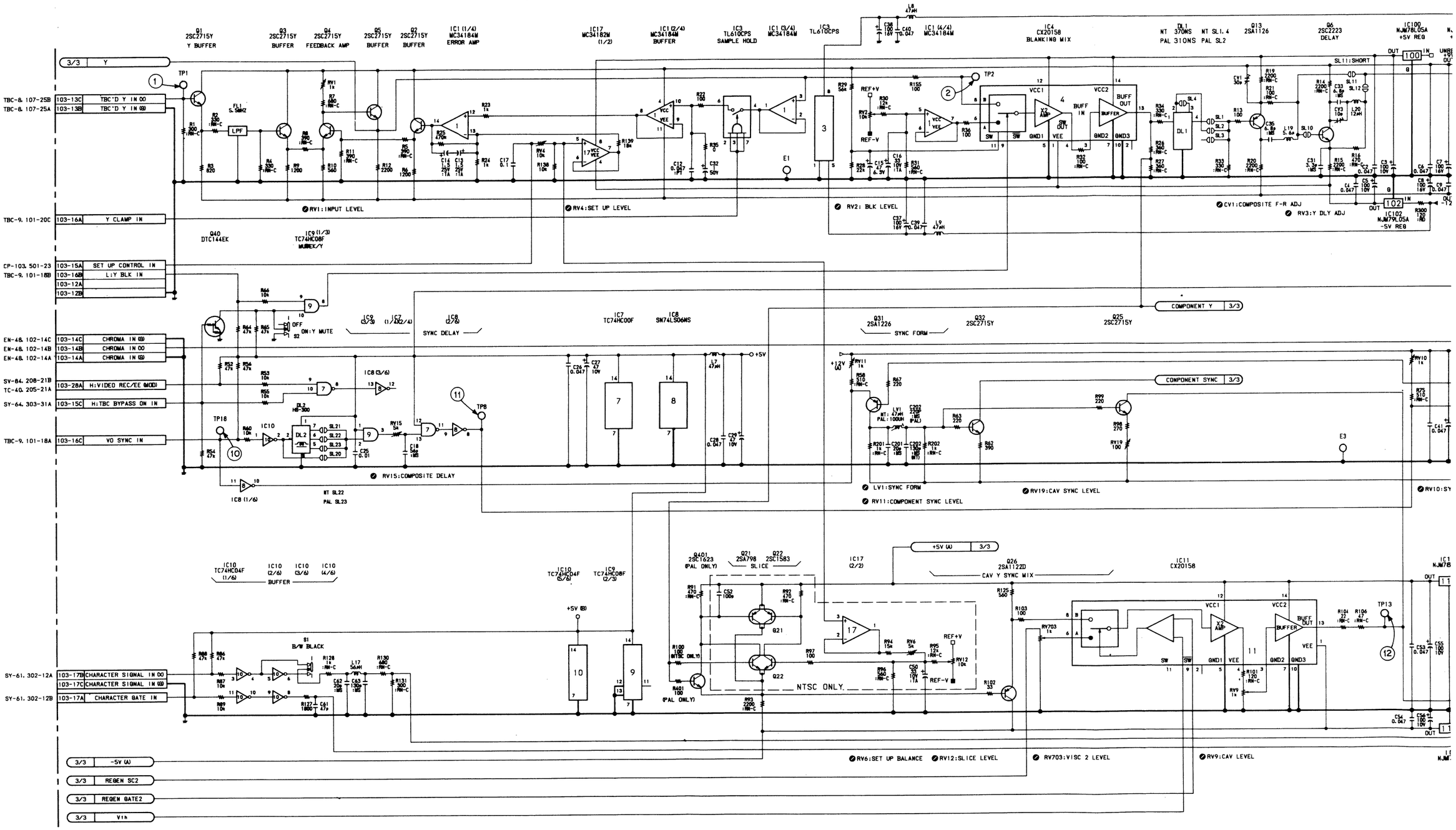


16-105 (a)

16-106 (a)

A B C D E F G H

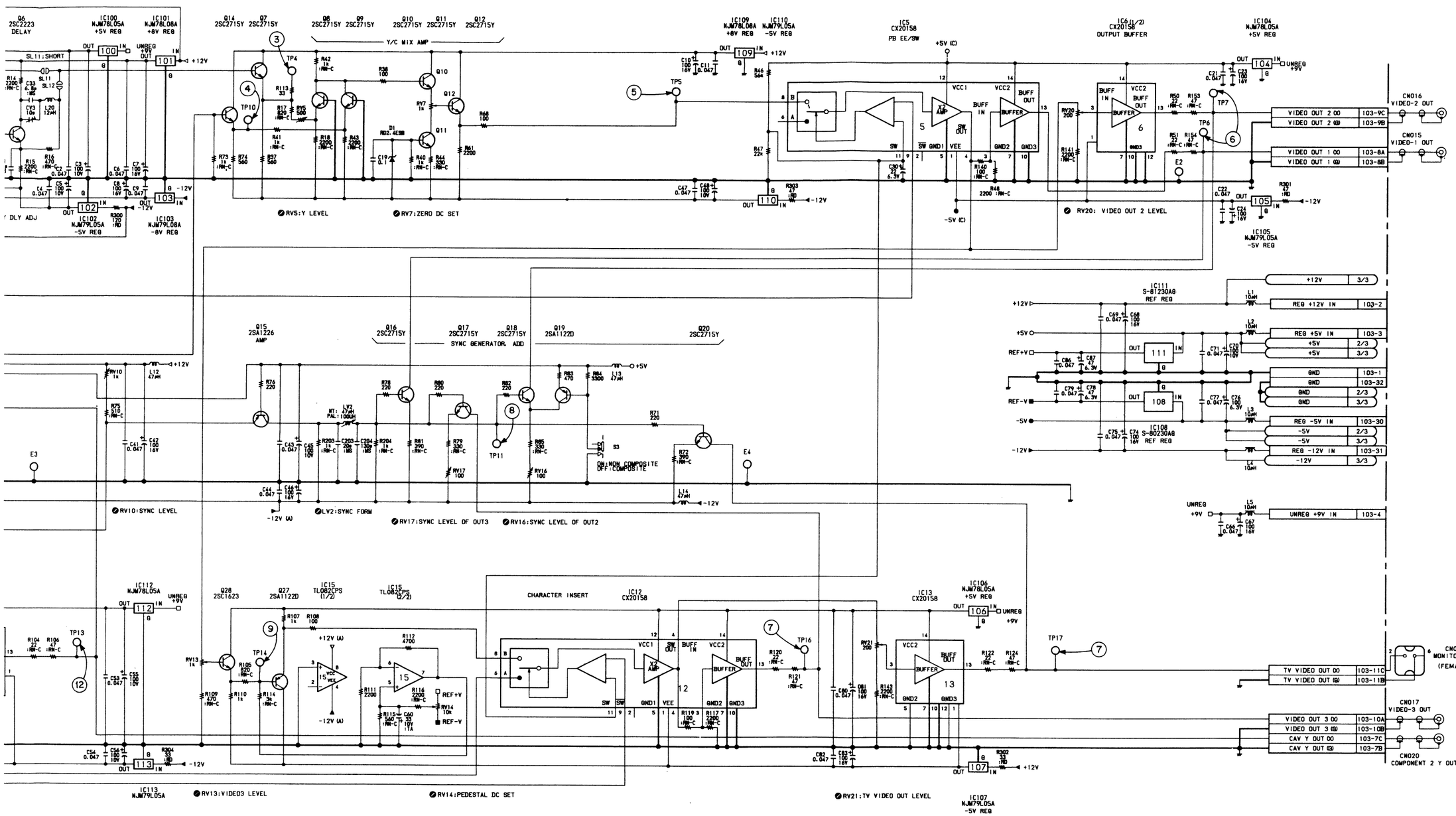


# VO-18AP (1/3)

1-622-547-13
BVW-60P
BVW-65P
BVW-95P

16-107 (a)

16-108 (a)

I J K L M N O P

# VO-18AP (1/3) ; VIDEO OUTPUT

S/N 10061 and higher

NOTE

| MARK | CHANGE INFORMATION | SERIAL NO. |
|---|---|---|
| *1 | R17 820 → 910 | S/N 10356 ～ |
| *2 | C13, C14 10 → 33 | S/N 11038 ～ |

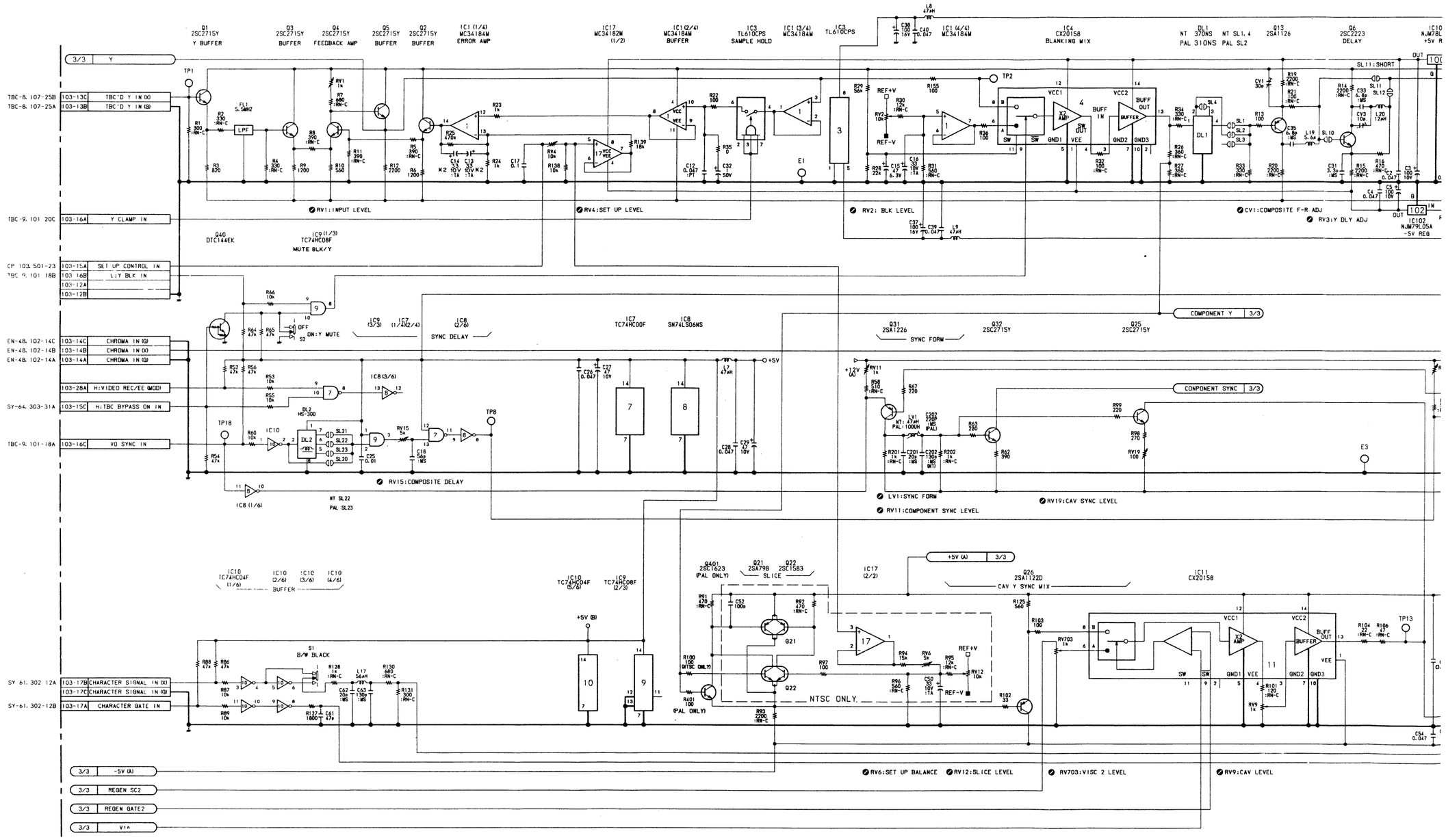


16-105 (b)

16-106 (b)

A B C D E F G H

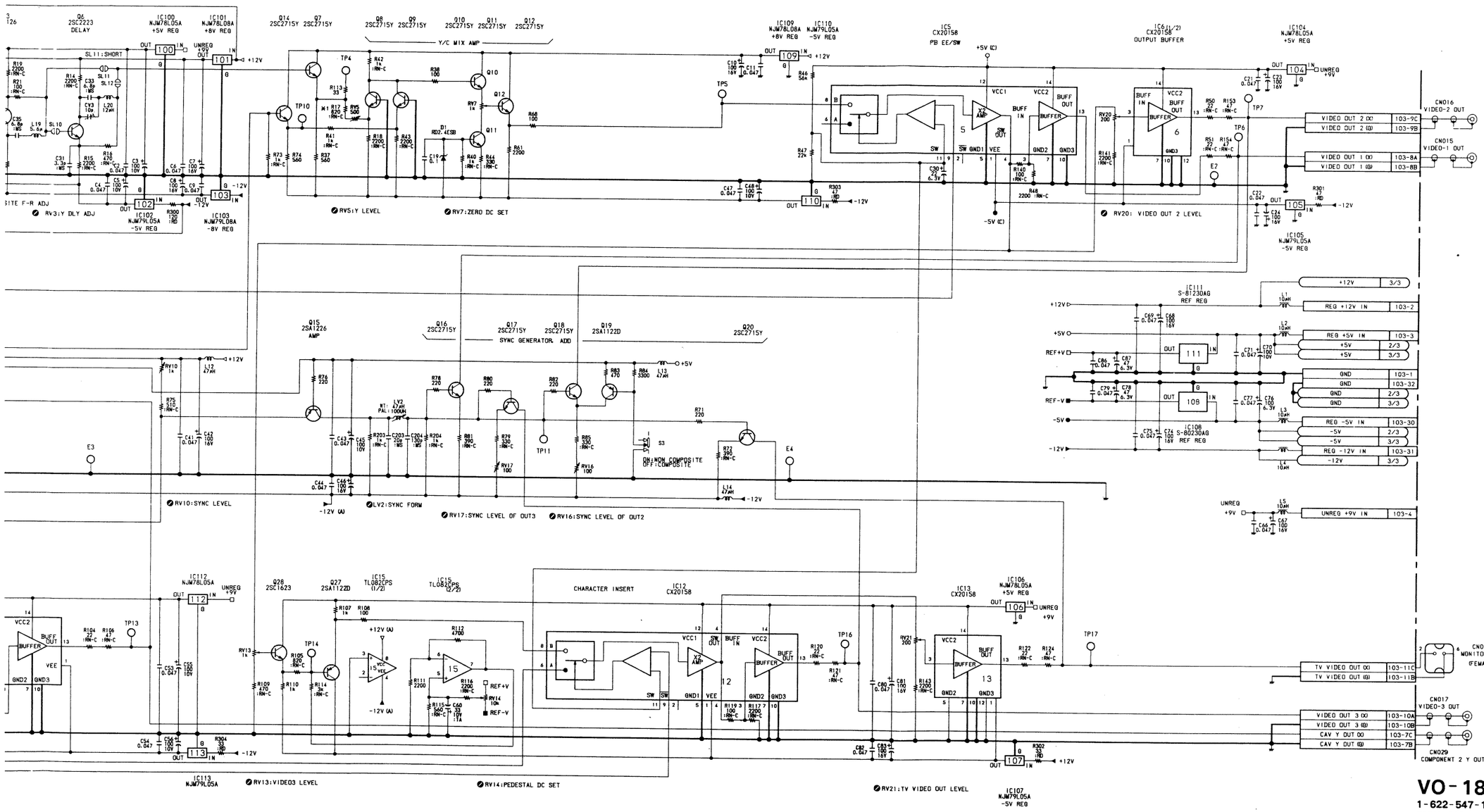


**VO-18AP(1/3)**
1-622-547-13
BVW-60P
BVW-65P
BVW-95P

16-107 (b)

16-108 (b)

I J K L M N O P

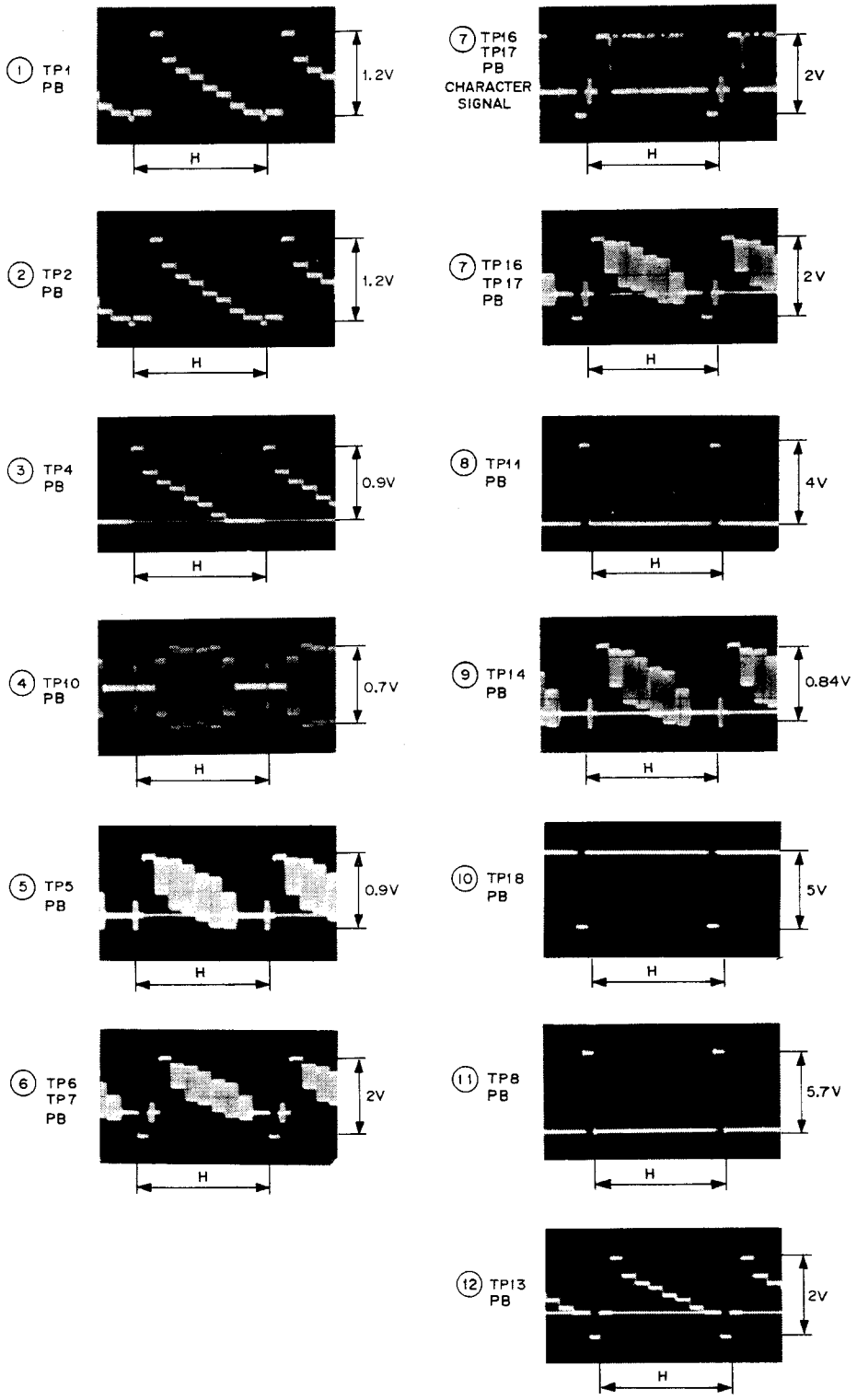
① TP1 PB
1.2V
H
② TP2 PB
1.2V
H
③ TP4 PB
0.9V
H
④ TP10 PB
0.7V
H
⑤ TP5 PB
0.9V
H
⑥ TP6 TP7 PB
2V
H
⑦ TP16 TP17 PB CHARACTER SIGNAL
2V
H
⑦ TP16 TP17 PB
2V
H
⑧ TP11 PB
4V
H
⑨ TP14 PB
0.84V
H
⑩ TP18 PB
5V
H
⑪ TP8 PB
5.7V
H
⑫ TP13 PB
2V
H

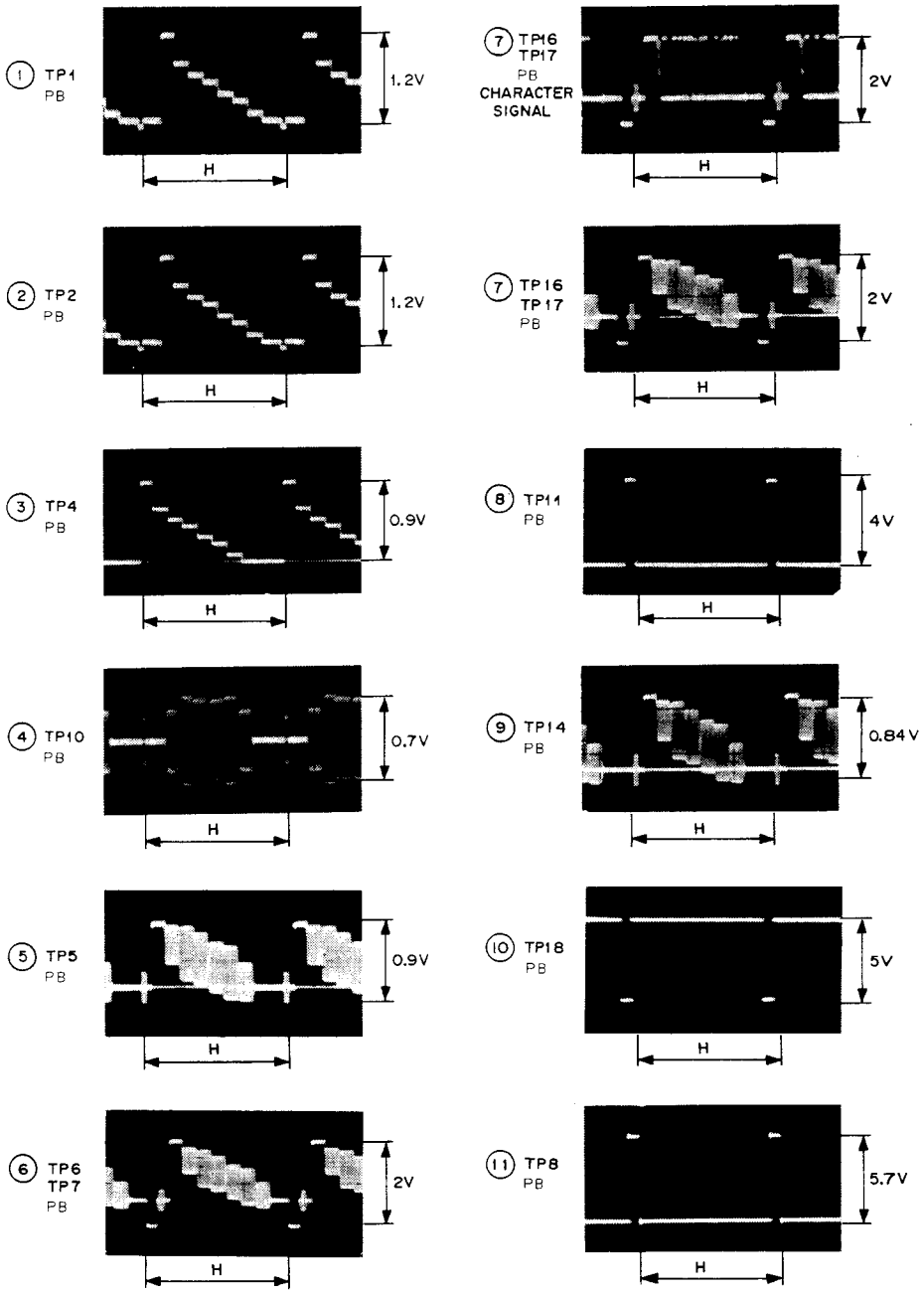
① TP1 PB
1.2V
H
② TP2 PB
1.2V
H
③ TP4 PB
0.9V
H
④ TP10 PB
0.7V
H
⑤ TP5 PB
0.9V
H
⑥ TP6 TP7 PB
2V
H
⑦ TP16 TP17 PB CHARACTER SIGNAL
2V
H
⑦ TP16 TP17 PB
2V
H
⑧ TP11 PB
4V
H
⑨ TP14 PB
0.84V
H
⑩ TP18 PB
5V
H
⑪ TP8 PB
5.7V
H

VO-18AP (2/3), (3/3)

**VO-18AP** (2/3) ; AGC FOR AFM
**VO-18AP** (3/3) ; SCH DETECTOR

S/N 10001 through 10060

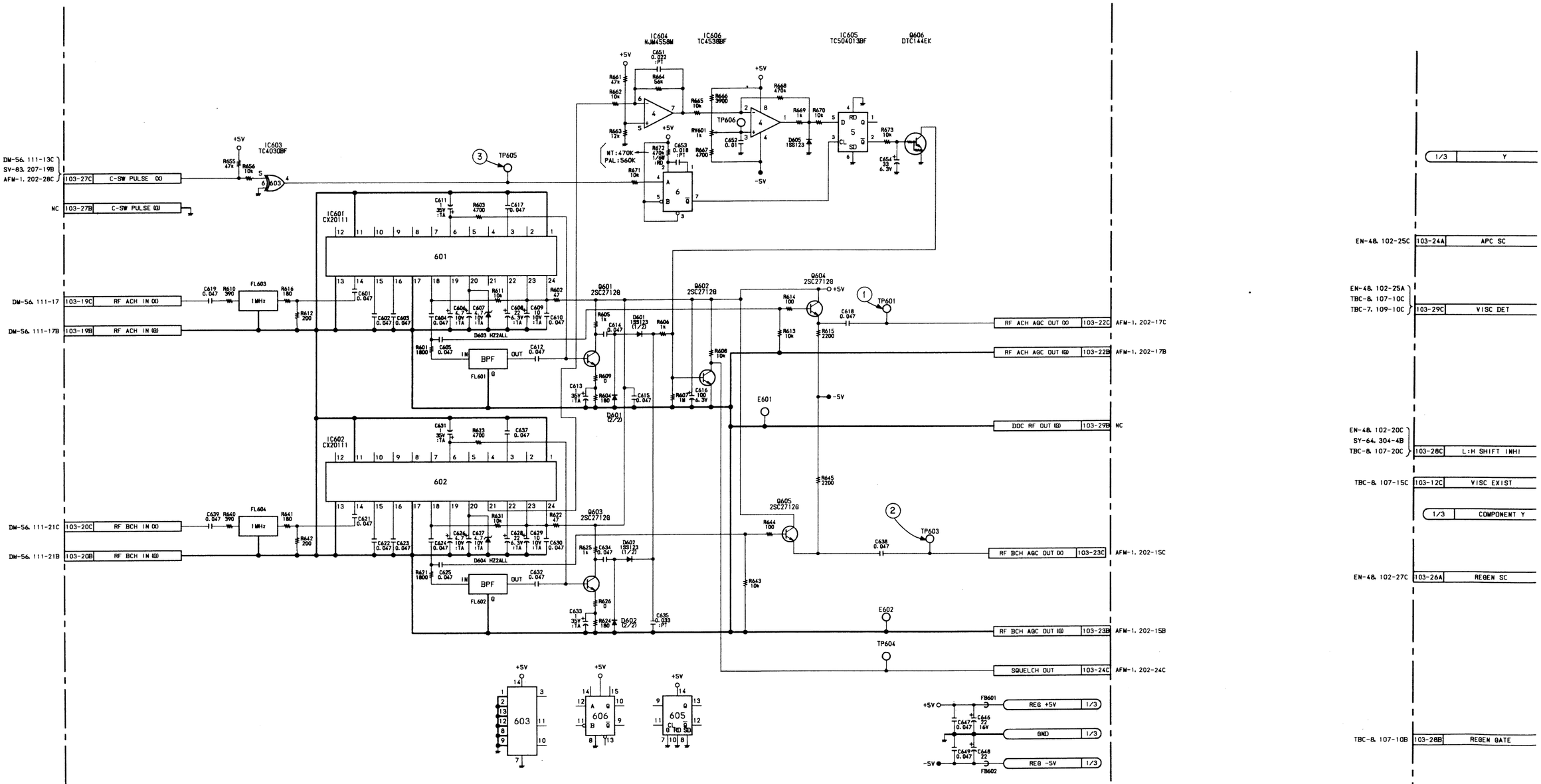


## VO-18AP (2/3)

1-622-547-13
BVW-60P
BVW-65P
BVW-95P

16-113 (a)

16-114 (a)

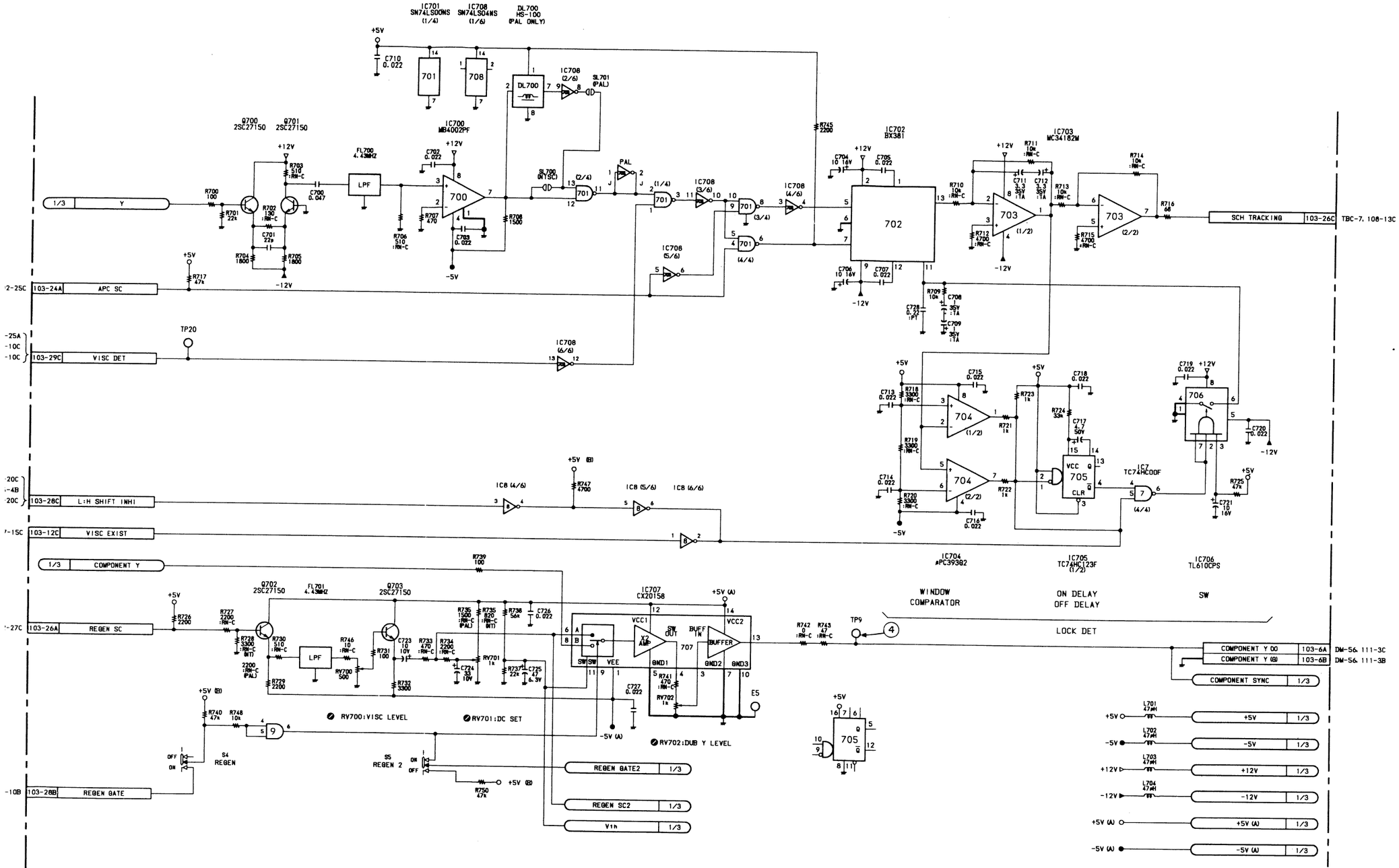


# VO-18AP (3/3)

1-622-547-13
BVW-60P
BVW-65P
BVW-95P

16-115 (a)

16-116 (a)

I J K L M N O P

VO-18AP (2/3), (3/3), DUS-270

# VO-18AP (2/3); AGC FOR AFM
# VO-18AP (3/3); SCH DETECTOR
# DUS-270; SQUELCH BUFFER

S/N 10061 and higher

NOTE

| MARK | CHANGE INFORMATION | SERIAL NO. |
|---|---|---|
| *1 | DELETED<br>C652, R667, RV601<br>TP604, TP605, TP606<br>ADDED<br>R675, R676<br>CHANGE<br>R666 3900 → 100k | S/N 10948 ~ |

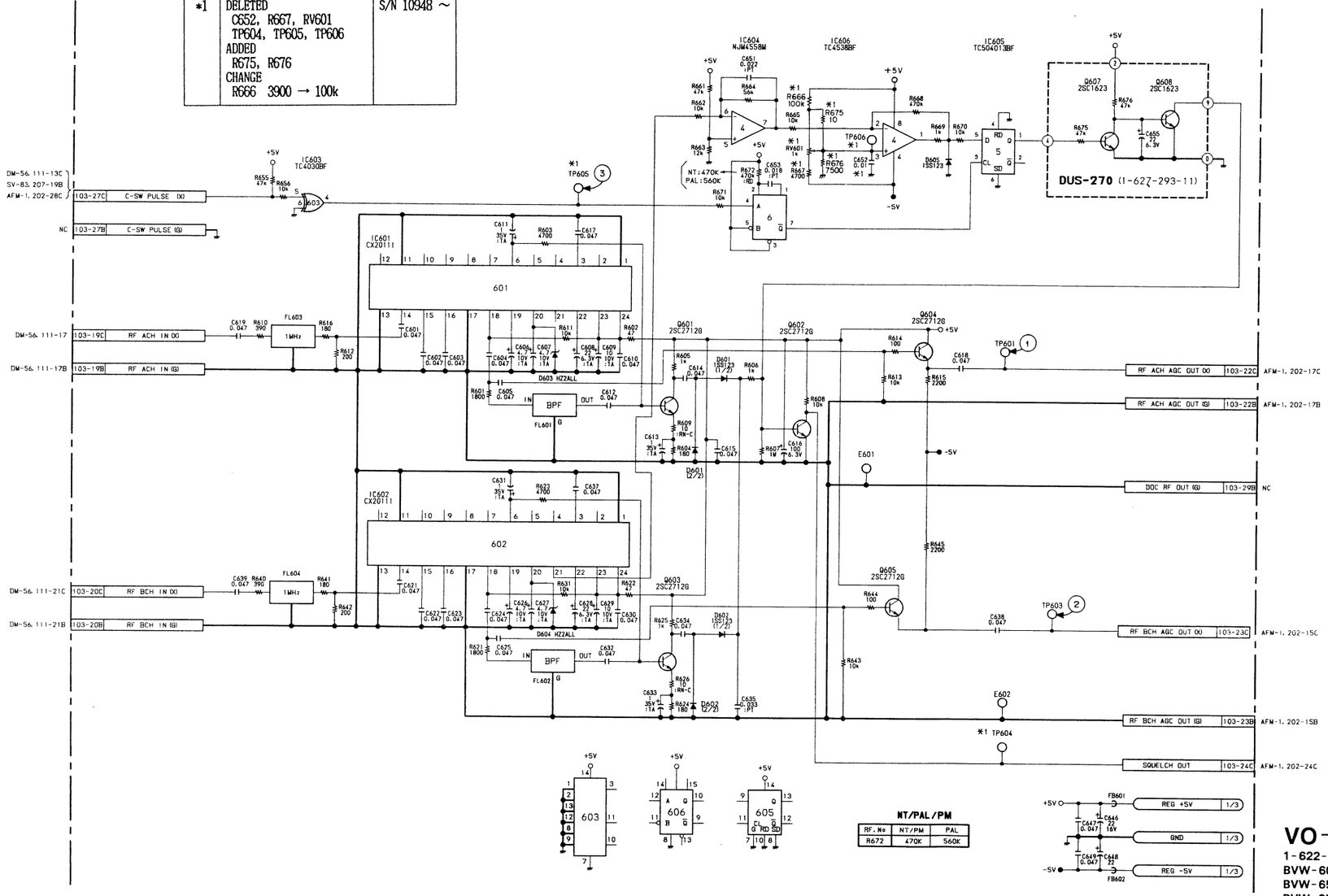


**NT/PAL/PM**

| RF. No | NT/PM | PAL |
|---|---|---|
| R672 | 470K | 560K |

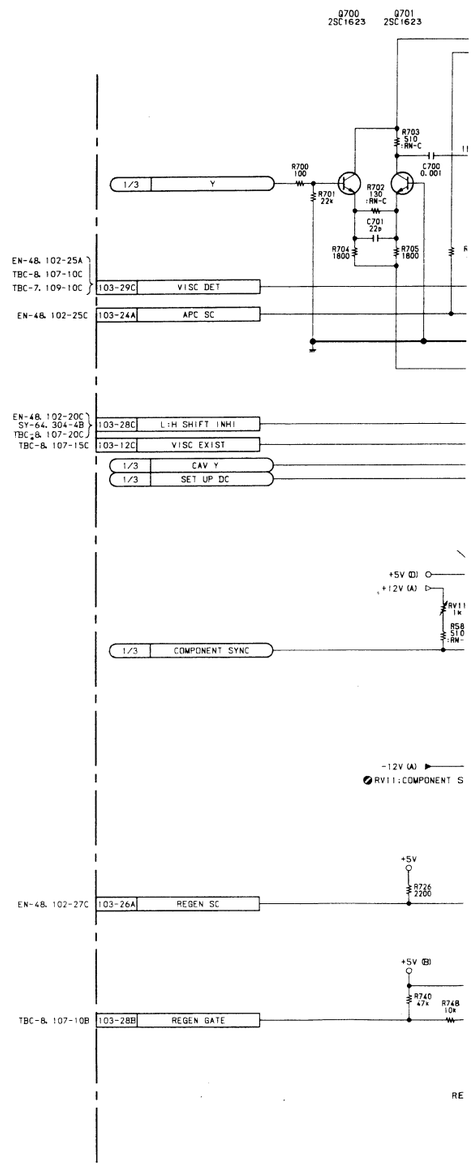


**VO-18AP (2/3)**
**1-622-547-21, 22, 23**
**BVW-60P**
**BVW-65P**
**BVW-95P**

VO-18AP (2/3), (3/3), DUS-270

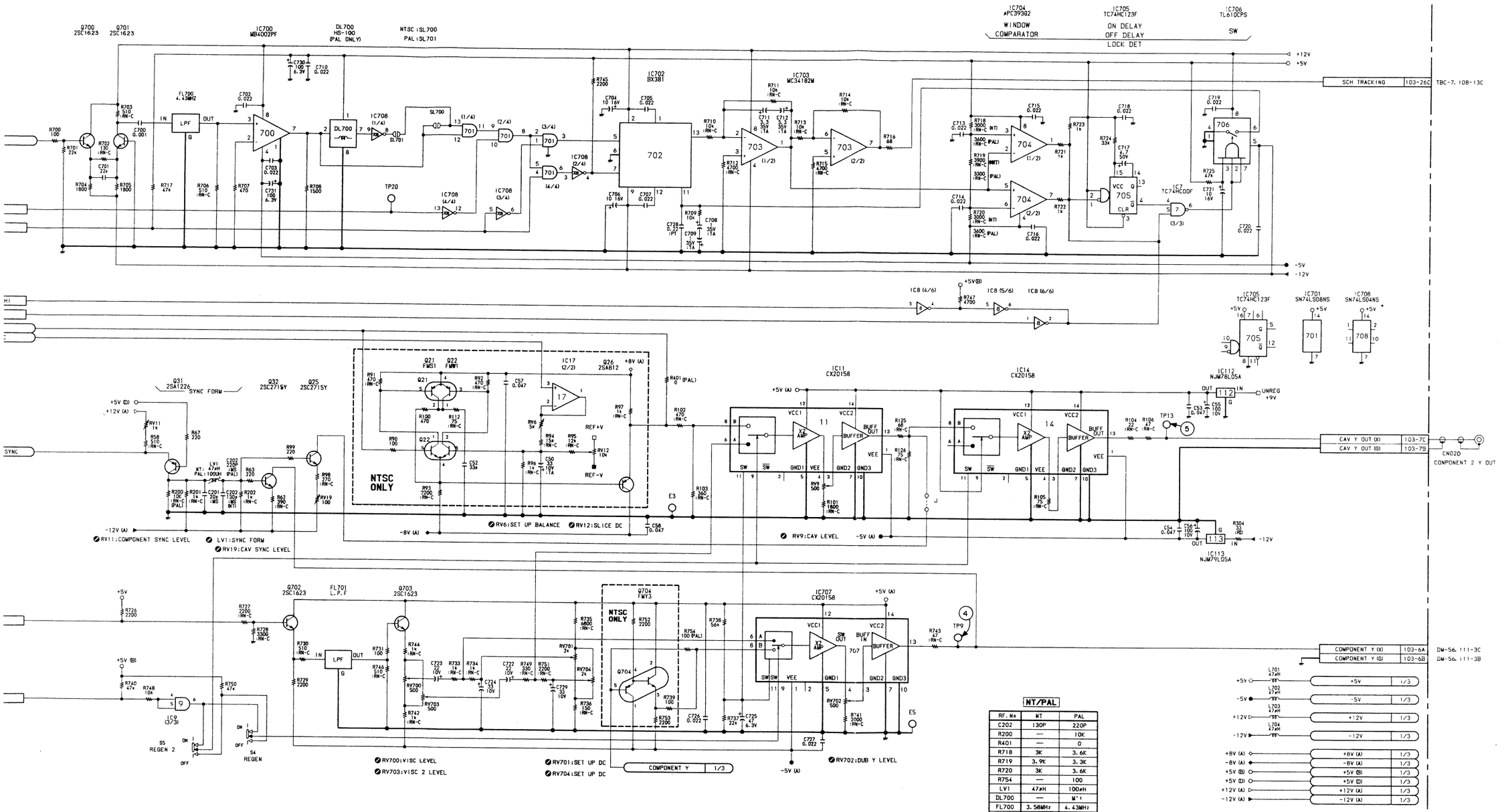


**NT/PAL**

| RF. No | NT | PAL |
|---|---|---|
| C202 | 130P | 220P |
| R200 | — | 10K |
| R401 | — | 0 |
| R718 | 3K | 3.6K |
| R719 | 3.9K | 3.3K |
| R720 | 3K | 3.6K |
| R754 | — | 100 |
| LV1 | 47μH | 100μH |
| DL700 | — | M'T |
| FL700 | 3.58MHz | 4.43MHz |
| FL701 | 3.58MHz | 4.43MHz |

**SL**

| RF. No | NT | PAL |
|---|---|---|
| SL700 | SHORT | OPEN |
| SL701 | OPEN | SHORT |

# VO-18AP(3/3)

1-622-547-21, 22, 23
BVW-60P
BVW-65P
BVW-95P

16-115 (b)

16-116 (b)

I J K L M N O P

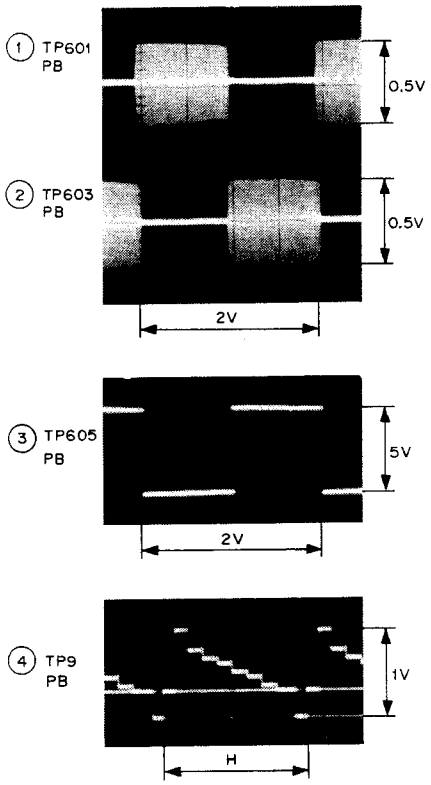
1 TP601
PB
0.5V
2 TP603
PB
0.5V
2V
3 TP605
PB
5V
2V
4 TP9
PB
1V
H

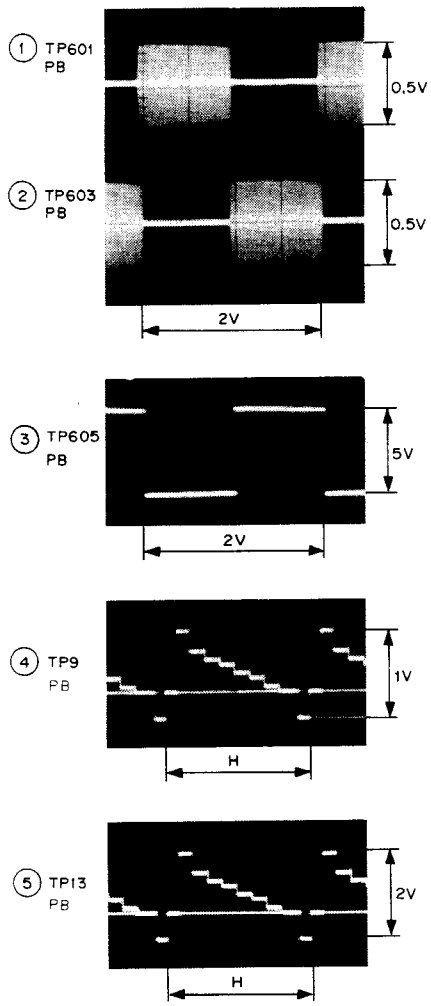
1 TP601
PB
0.5V
2 TP603
PB
0.5V
2V
3 TP605
PB
5V
2V
4 TP9
PB
1V
H
5 TP13
PB
2V
H

## DEC-39A; EDGE DETECTOR

S/N 10001 through 10622

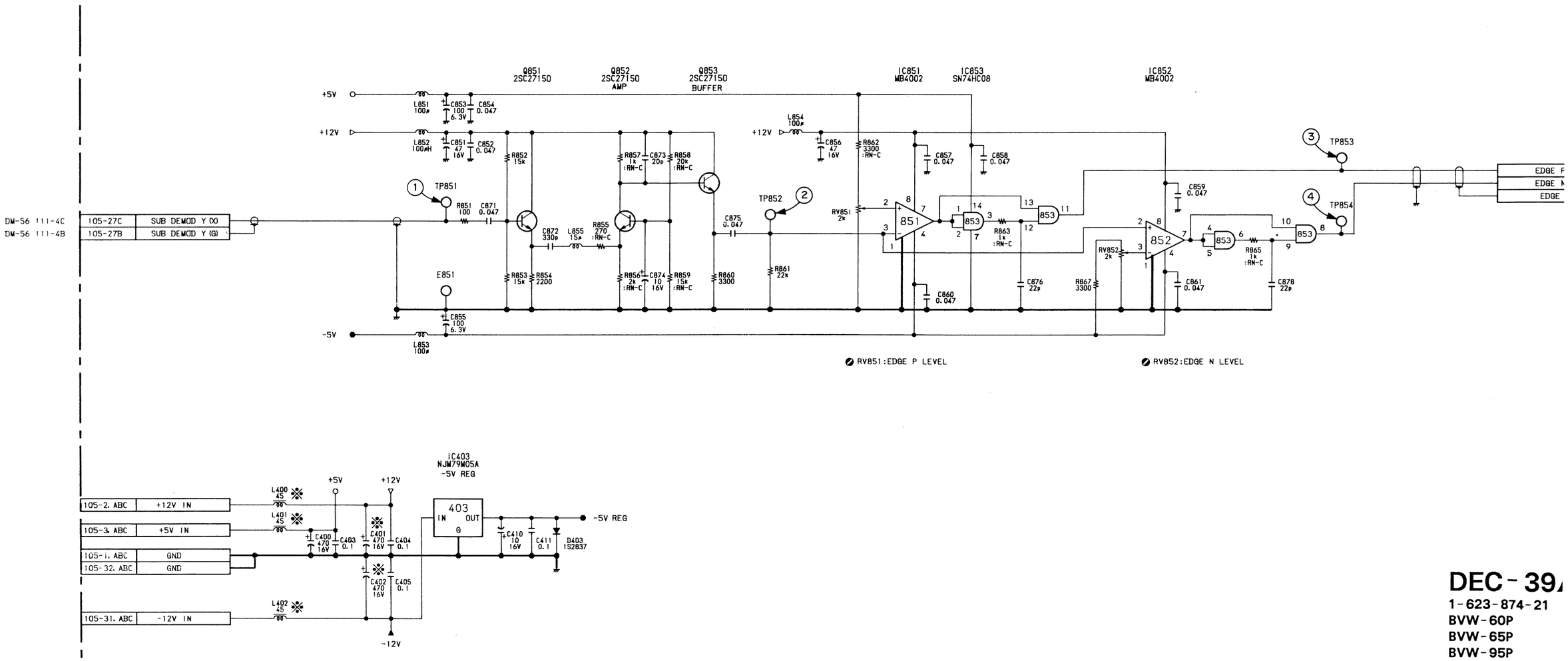


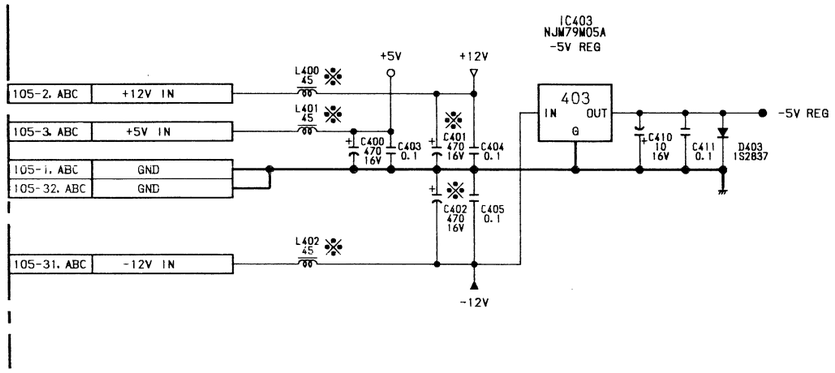


**DEC-39A**
**1-623-874-21**
**BVW-60P**
**BVW-65P**
**BVW-95P**

16-120 (a)

16-121 (a)

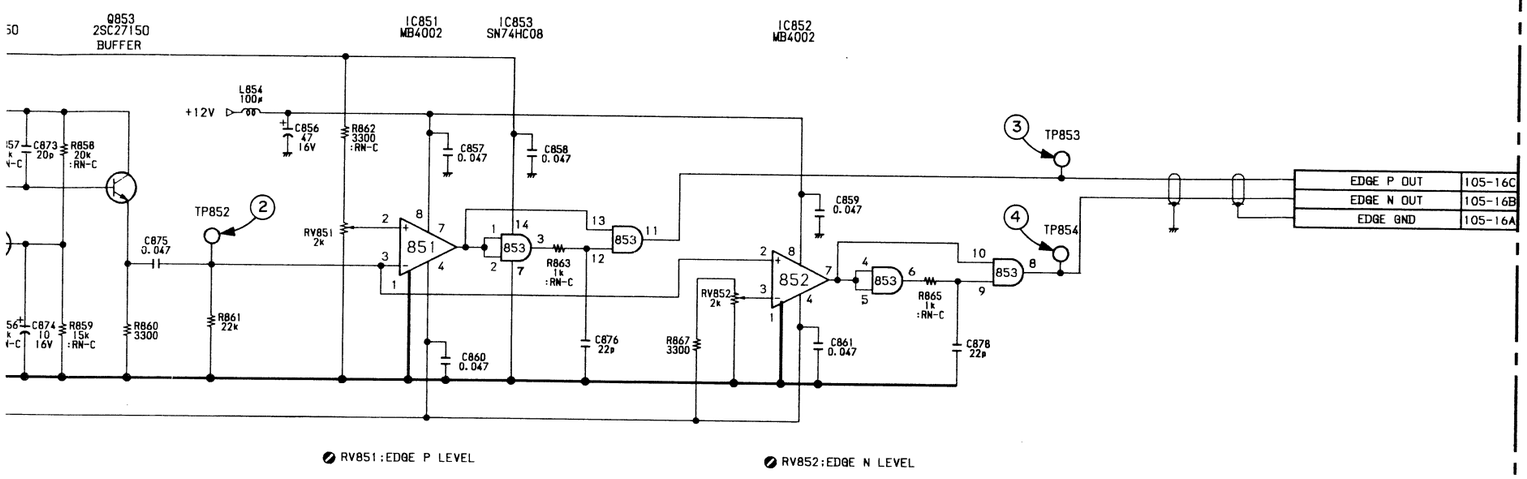


RV851:EDGE P LEVEL

RV852:EDGE N LEVEL

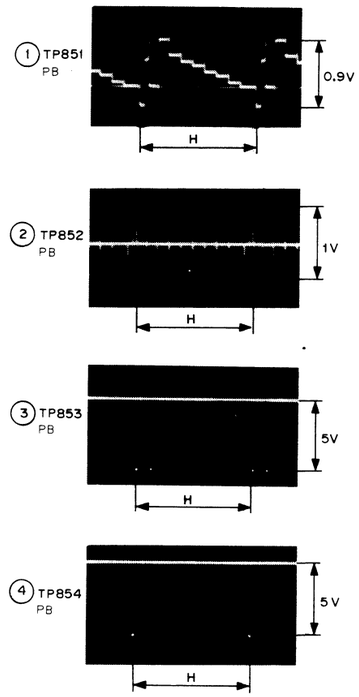


# DEC-39A

1-623-874-21
BVW-60P
BVW-65P
BVW-95P

16-121 (a)

16-122 (a)

E F G H I J K L

# DEC-46AP; EDGE DETECTOR

S/N 10623 and higher

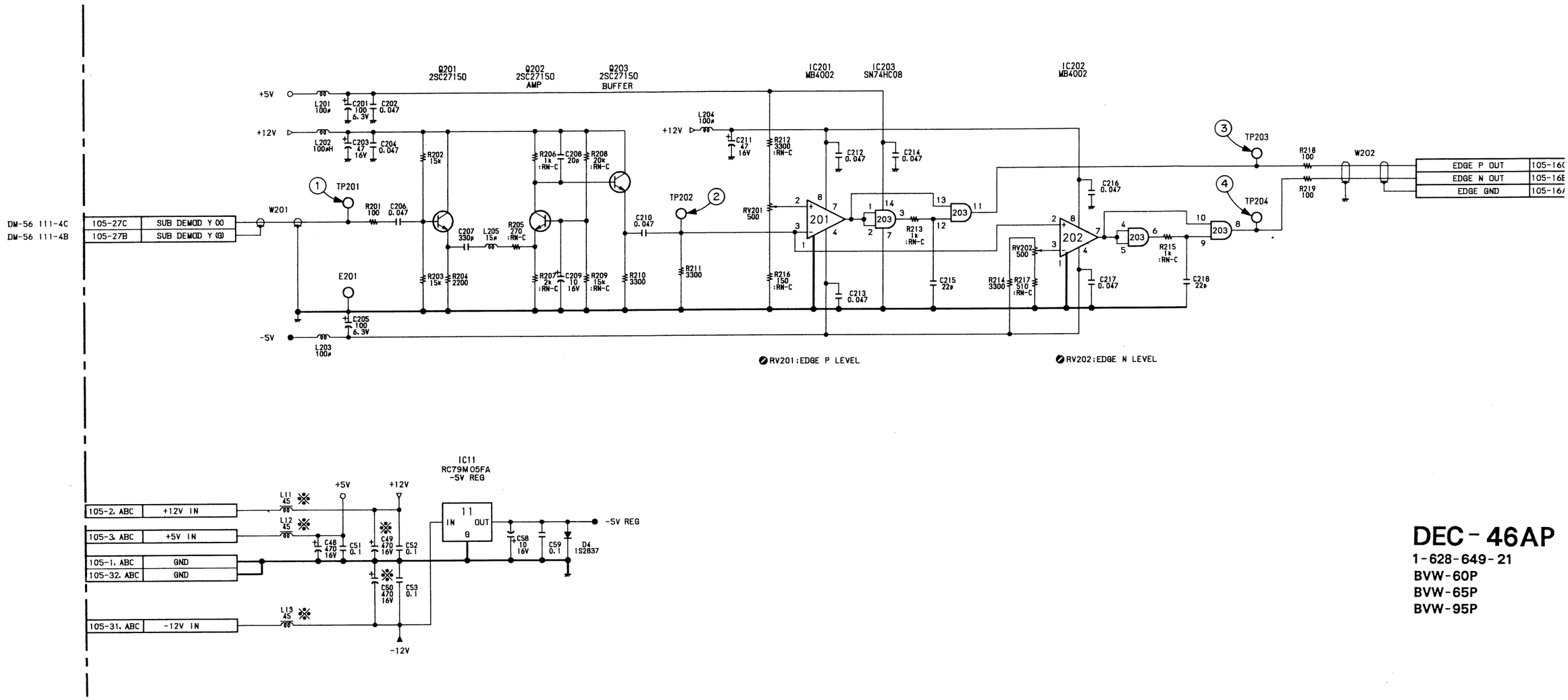





**DEC-46AP**
1-628-649-21
BVW-60P
BVW-65P
BVW-95P

16-120 (b)

16-121 (b)

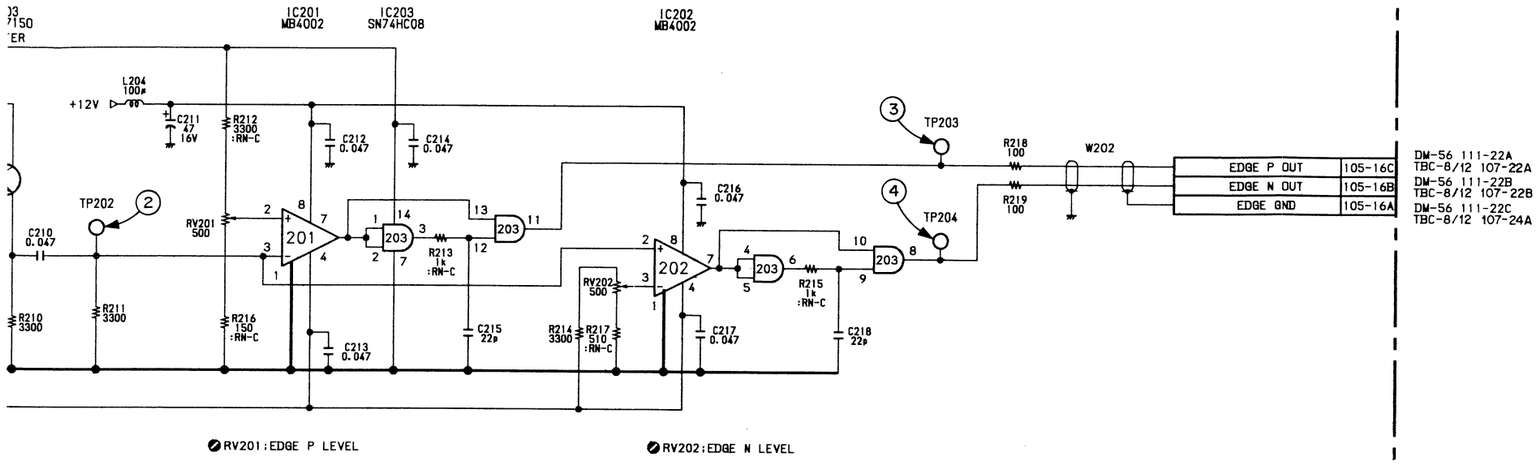


RV201:EDGE P LEVEL

RV202:EDGE N LEVEL

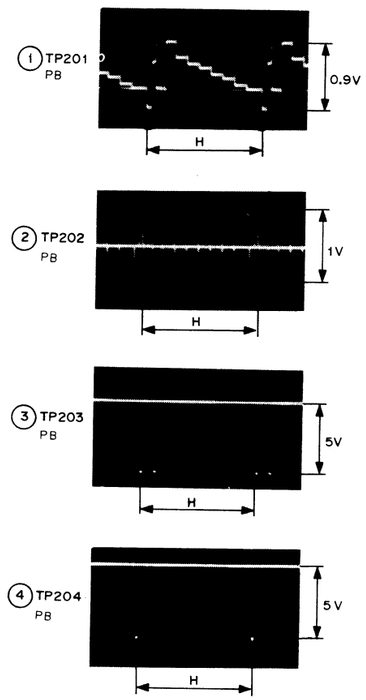


REG

**DEC-46AP**
**1-628-649-21**
**BVW-60P**
**BVW-65P**
**BVW-95P**

16-121 (b)

16-122 (b)

E F G H I J K L

**CP-101AP; REFERENCE VIDEO INPUT**
**CP-103AP; SUB CONTROL PANEL**

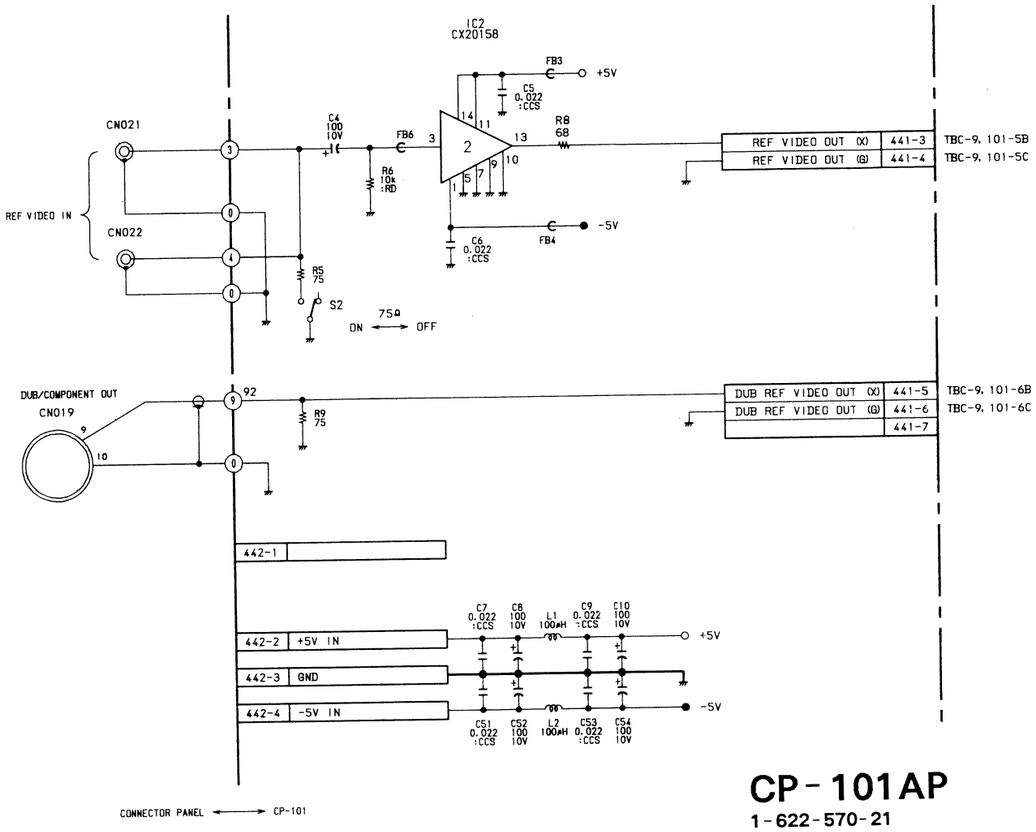


**CP-101AP**
**1-622-570-21**
**BVW-60P**
**BVW-65P**
**BVW-95P**

NOTE

| MARK | CHANGE INFORMATION | SERIAL NO. |
|---|---|---|
| *1 | R6 39k → 36k<br>R7 2200 → 2k | S/N 11103 ～ |

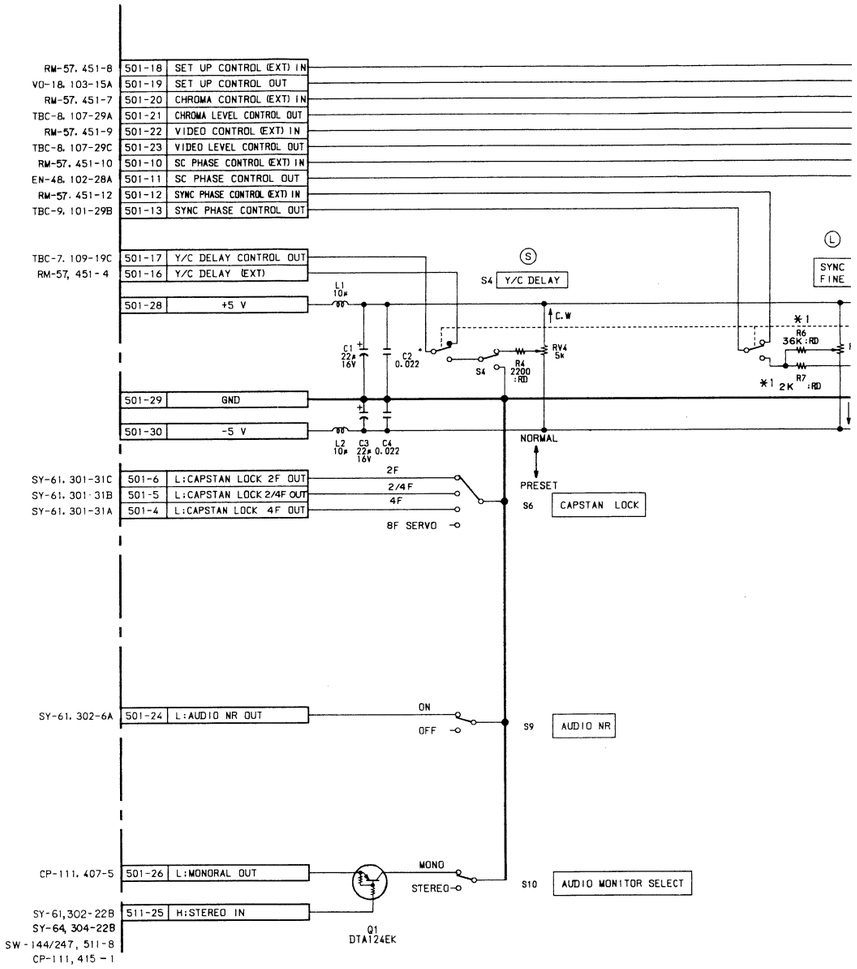

NOTE

| MARK | CHANGE INFORMATION | SERIAL NO. |
|---|---|---|
| *1 | R6 39k → 36k<br>R7 2200 → 2k | S/N 11103 ～ |

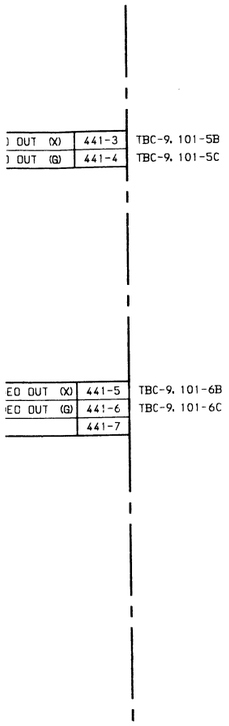


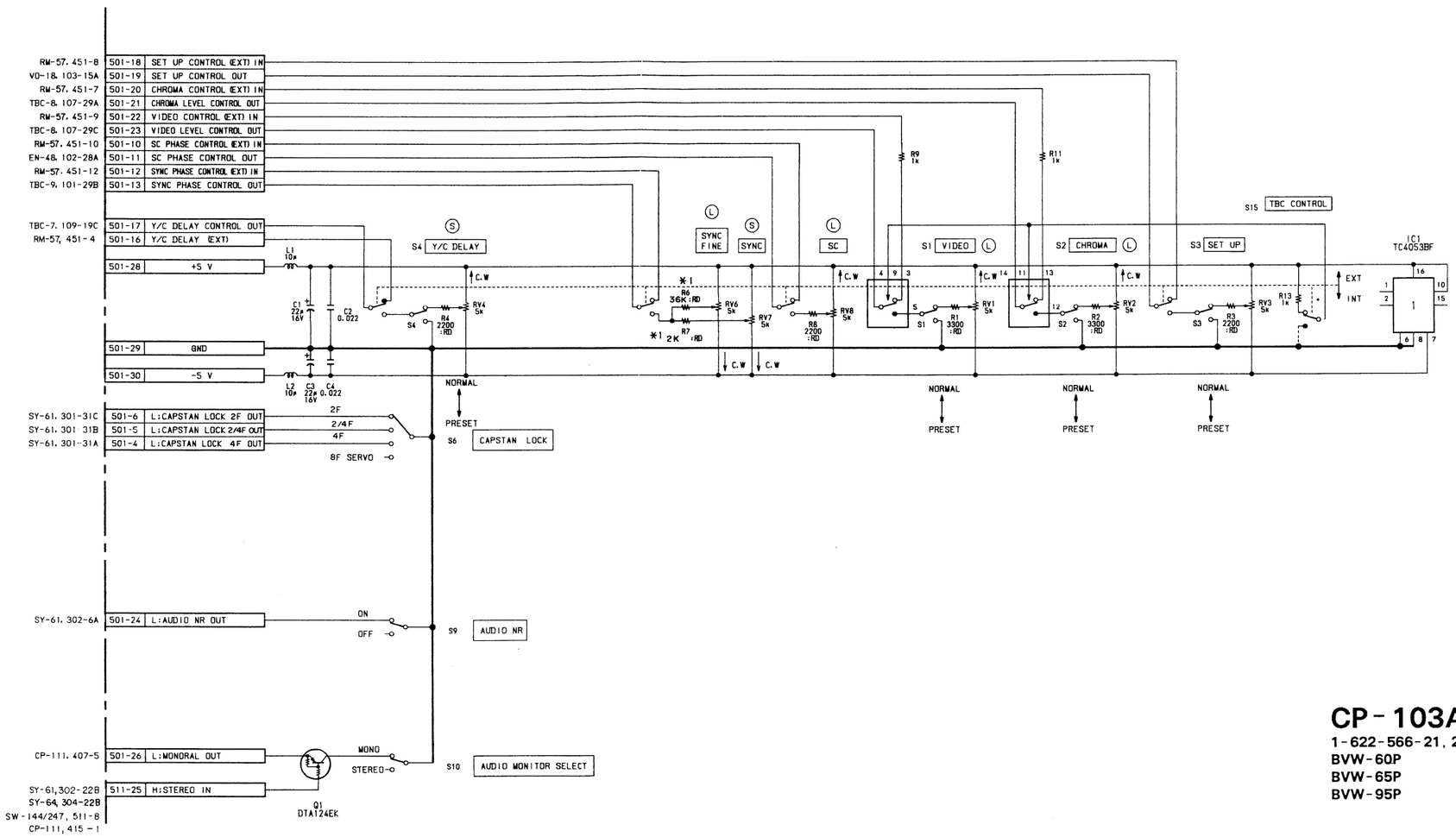


- 101AP
- 570- 21
60P
65P
95P

CP- 103AP
1- 622- 566- 21, 22
BVW- 60P
BVW- 65P
BVW- 95P

# AU-118P; LNG AUDIO HEAD AMPLIFIER

NOTE

| MARK | CHANGE INFORMATION | SERIAL NO. |
|---|---|---|
| *1 | C163 8200pF → 6800pF<br>C263 8200pF → 6800pF<br>C164 680pF ADDED<br>C264 680pF ADDED | S/N 10271 ~ |
| *2 | R195 → R147 330k<br>R246 330 → 180k | S/N 10928 ~ |
| *3 | R146 62k → 82k<br>R154 330k → 560k<br>R156 120k → 150k<br>R246 180k → 82k<br>R250 DELETED | S/N 11038 ~ |

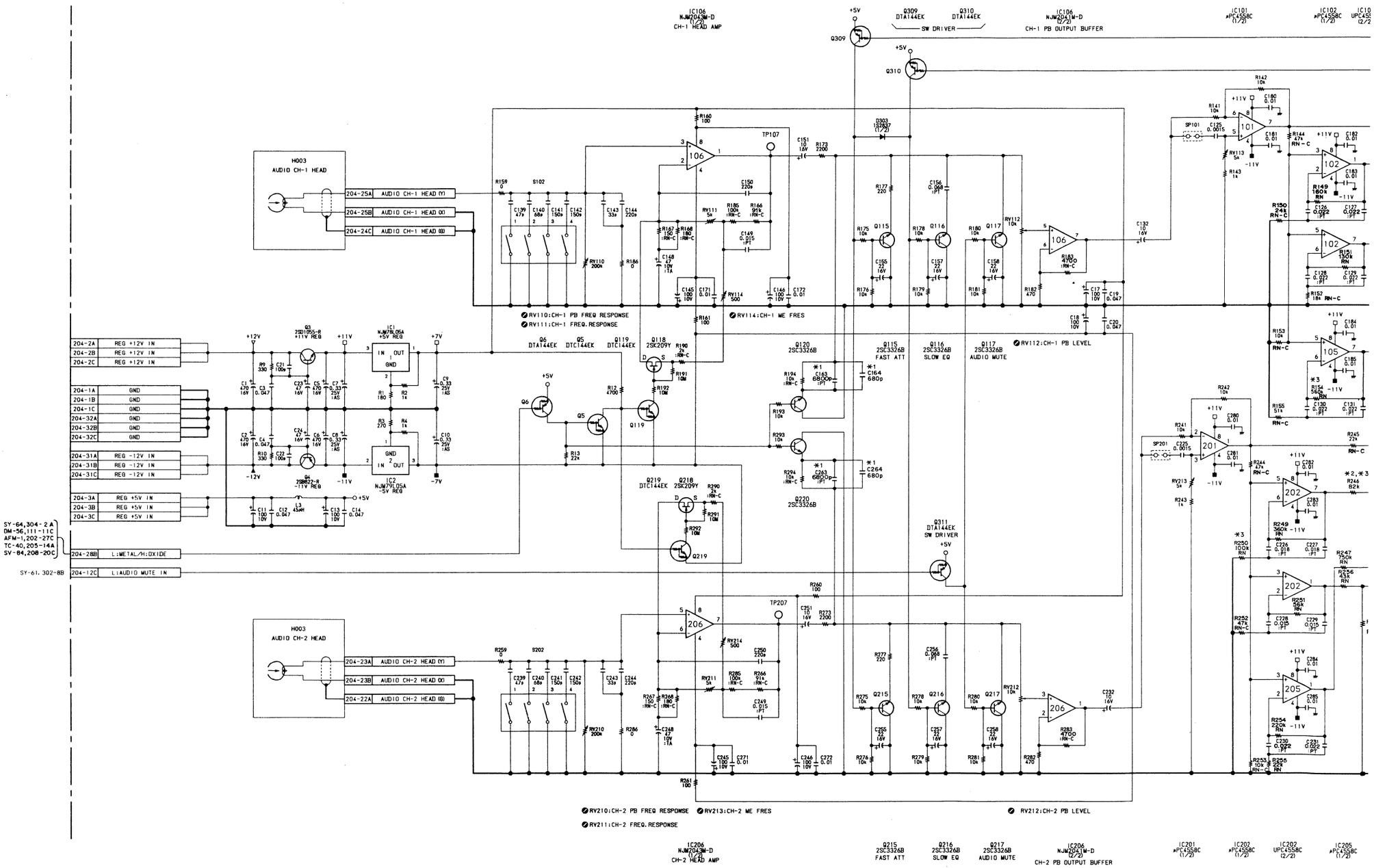

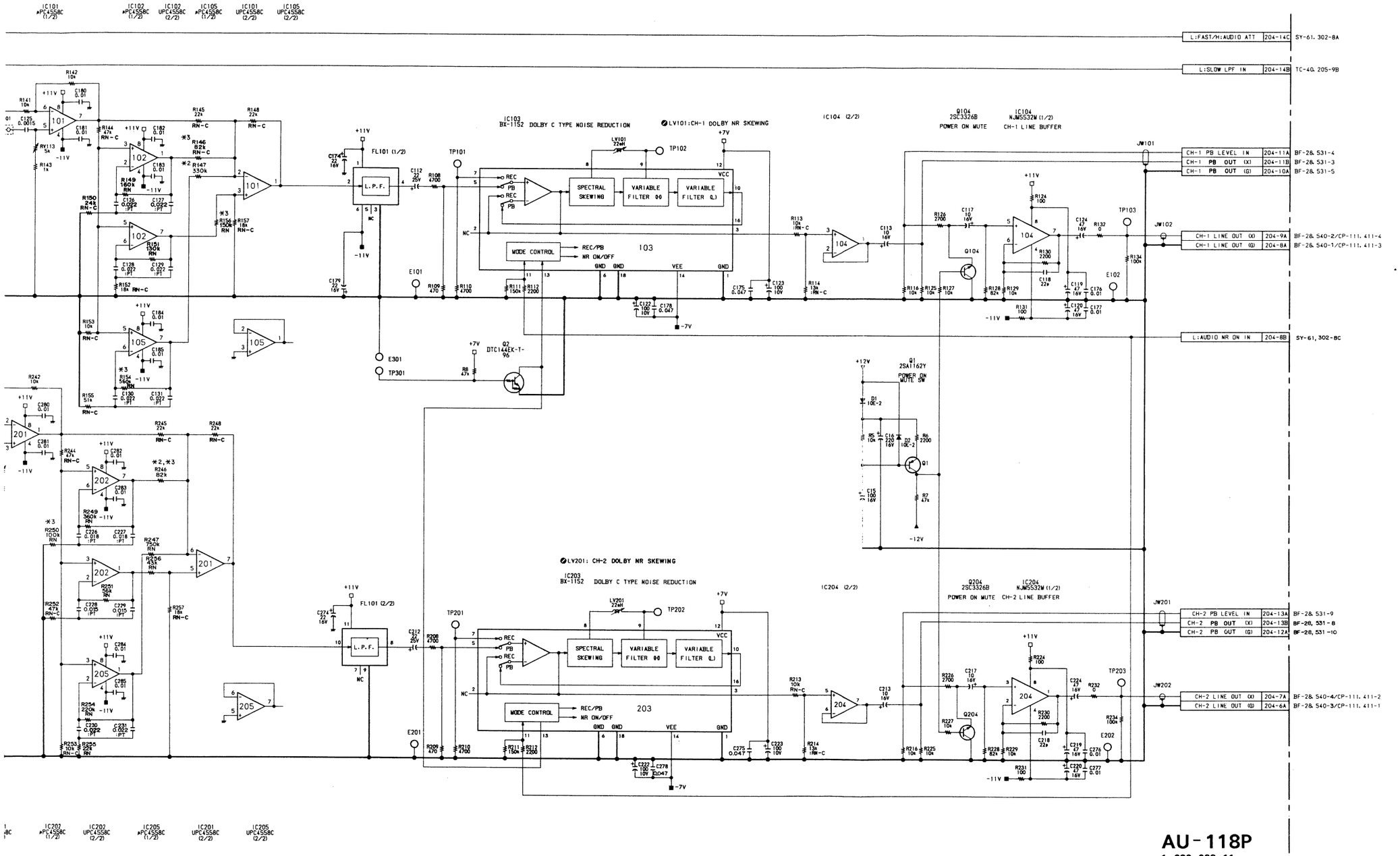


**AU-118P**
**1-626-092-11**
**BVW-60P**
**BVW-65P**
**BVW-95P**

**AFM-1A ; AFM AUDIO DEMODULATOR**
**FL-61 ; AUDIO LPF**

NOTE

| MARK | CHANGE INFORMATION | SERIAL NO. |
|---|---|---|
| *1 | ADDED<br>C245, C907, C908, R912<br>R913, R914, R915<br>DELETED<br>R344, R444<br>CHANGE<br>R346 100k → 0<br>R446 100k → 0 | S/N 10928 ~ |
| *2 | DELETED<br>C720, C721, FL1, FL2<br>Q2, Q4, R4, R9, R33<br>R34, TP1, TP2, TP102<br>TP202, TP406, TP503<br>TP706, E101, E201<br>CHANGE<br>C207 100pF → 150pF<br>R3 390 → 820<br>R8 390 → 820 | S/N 10948 ~ |
| *3 | DELETED<br>C144, C244, C719, C907<br>C908, IC708, R5, R10<br>R27, R28, R122, R222<br>R321, R345, R421, R445<br>R912, R913, R914, R915<br>ADDED<br>C325, C326, C425, C426<br>R130, R131<br>CHANGE<br>C707 0.33 → 0.022<br>C714 0.33 → 0.022<br>R117 100k → 1M<br>R217 100k → 1M<br>R346 0 → 10k<br>R446 0 → 10k<br>R344 1k → 10k<br>R444 1k → 10k<br>RV2 47k → 50k<br>RV4 47k → 50k<br>RV5 22k → 20k<br>RV6 22k → 20k<br>RV102 4700 → 5k<br>RV202 4700 → 5k | S/N 11038 ~ |
| *4 | DELETED<br>C303, C304, C504, R302 | S/N 11083 ~ |

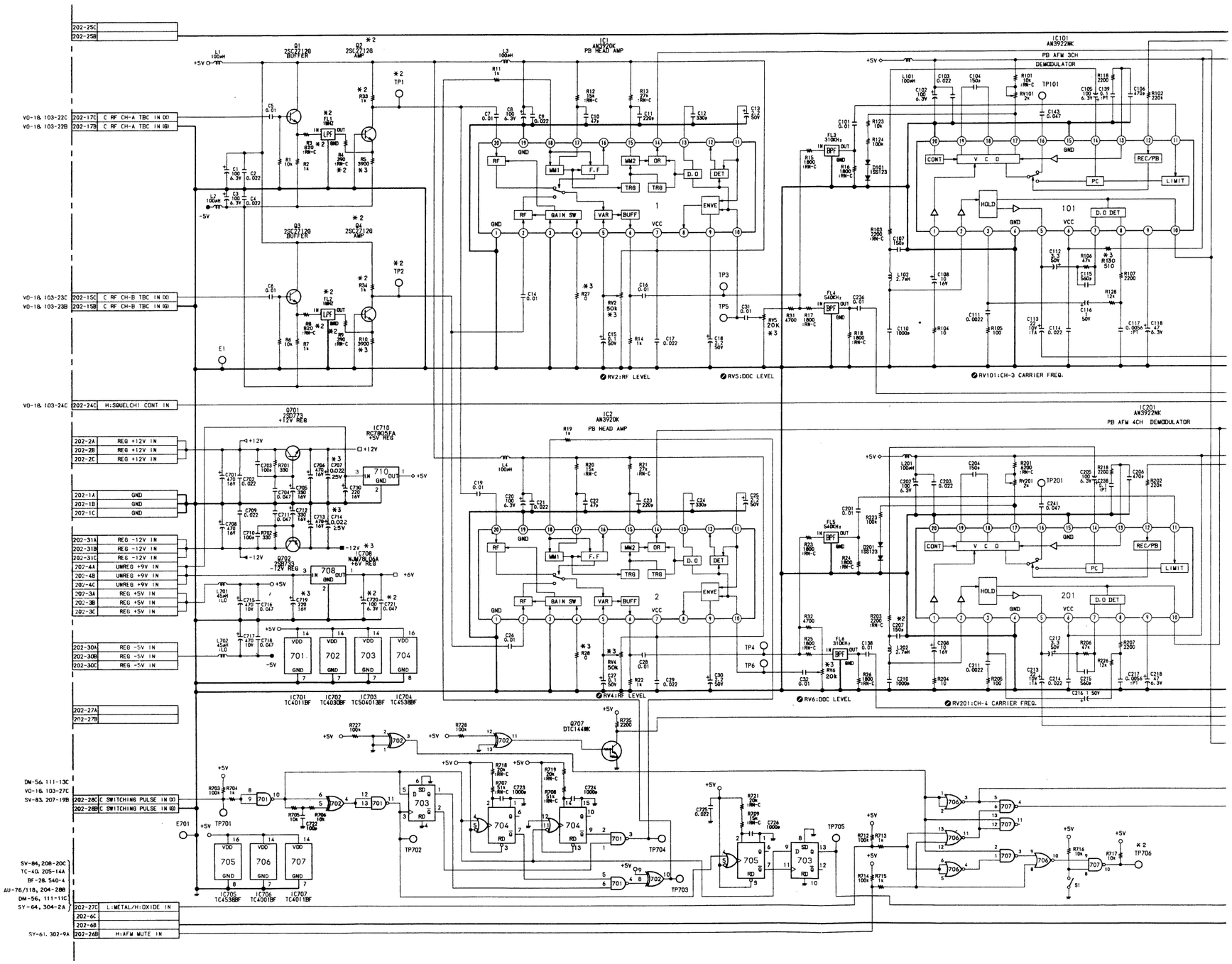

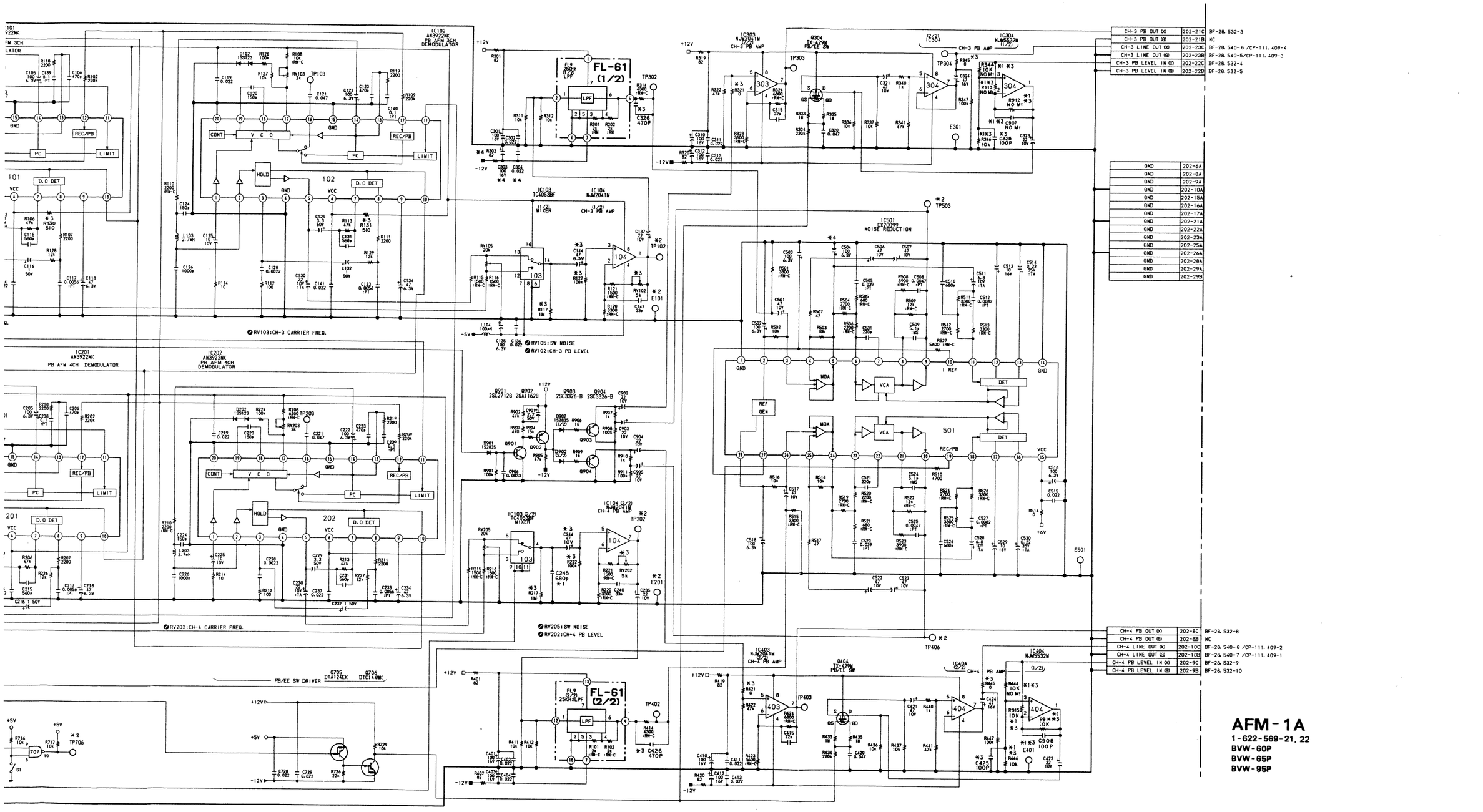


**AFM-1A**
**1-622-569-21, 22**
**BVW-60P**
**BVW-65P**
**BVW-95P**

**BF-28A** (1/2); AUDIO PB LEVEL CONTROL
**VR-42**; AUDIO PB VOLUME

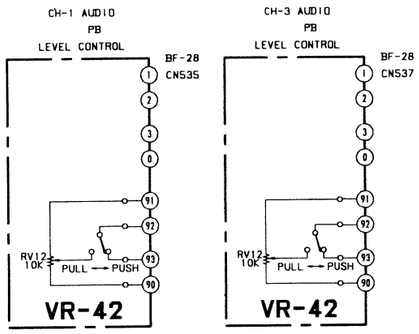





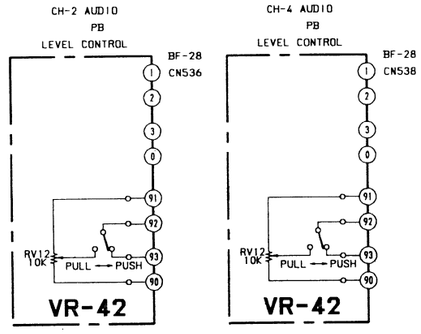





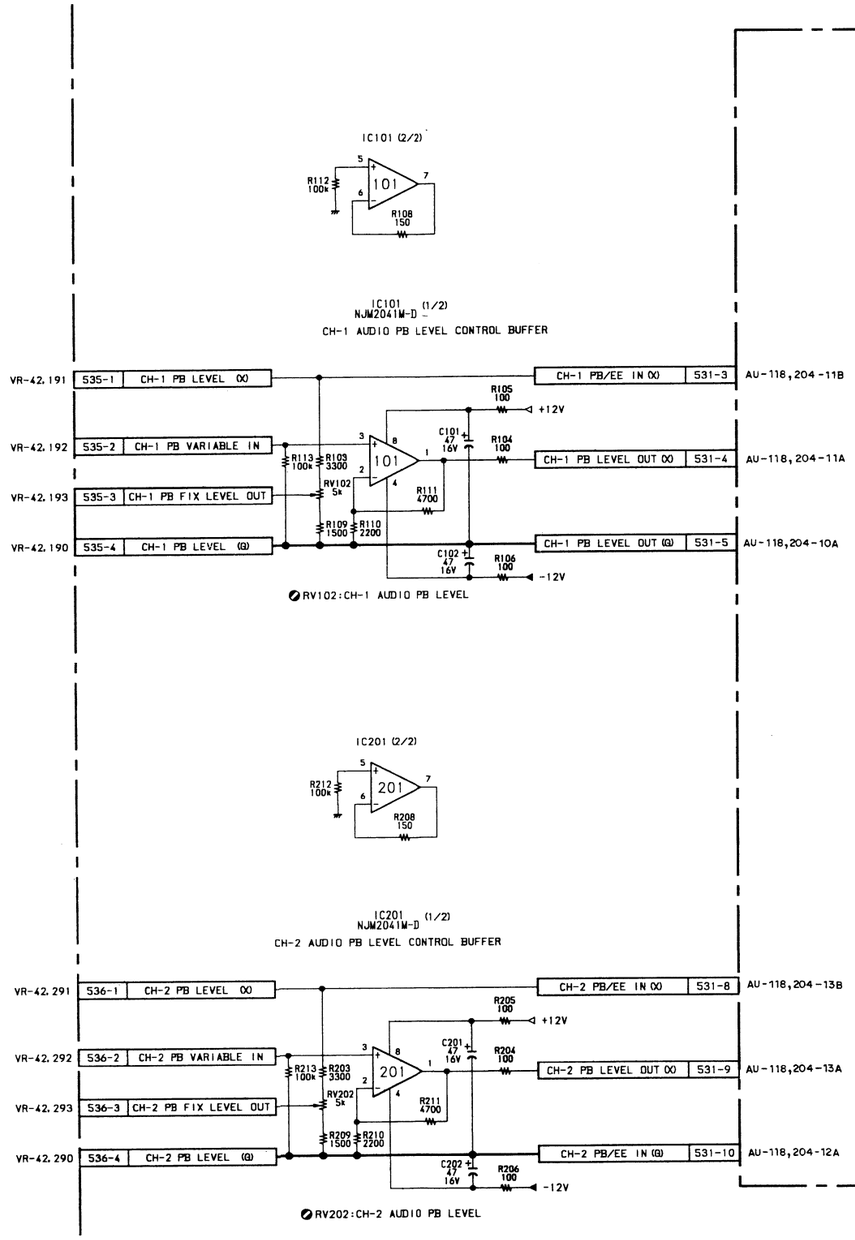


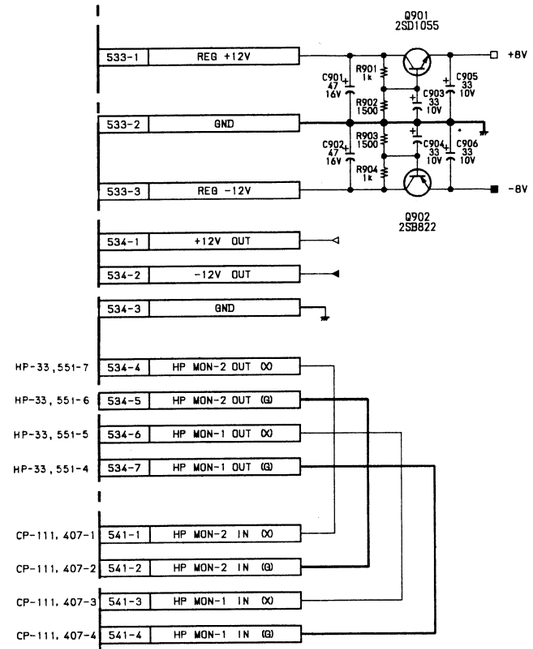


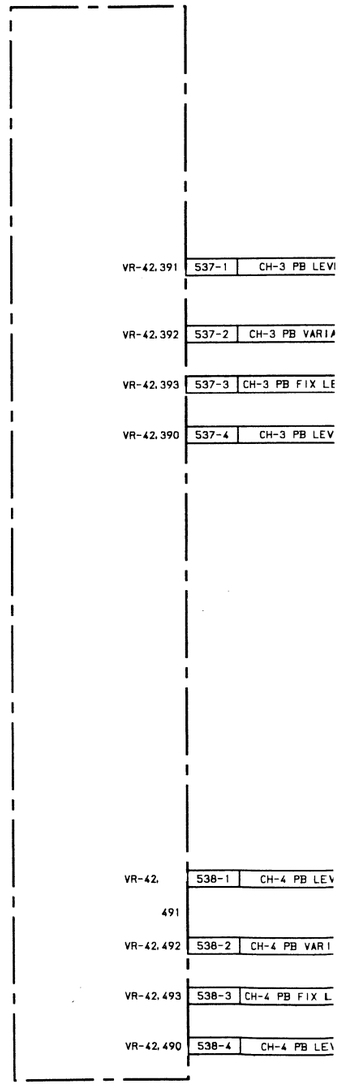

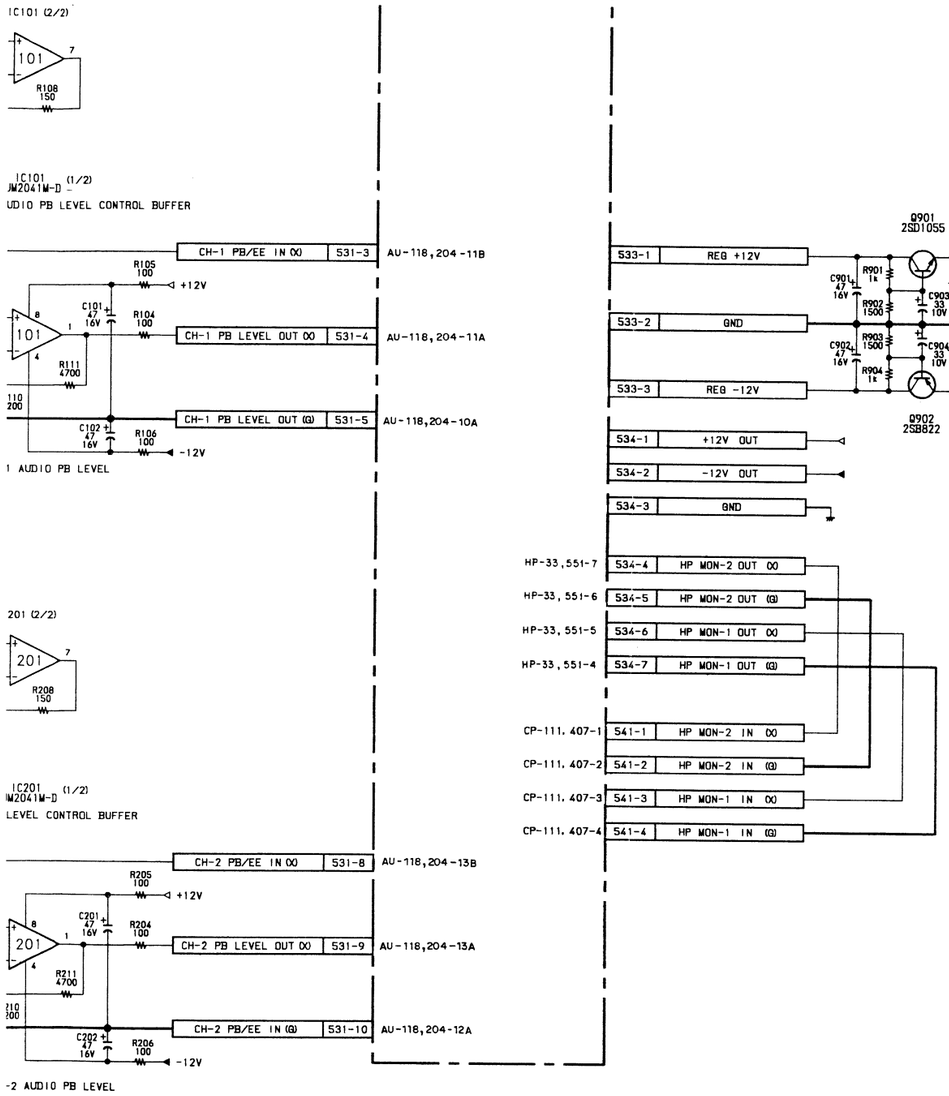


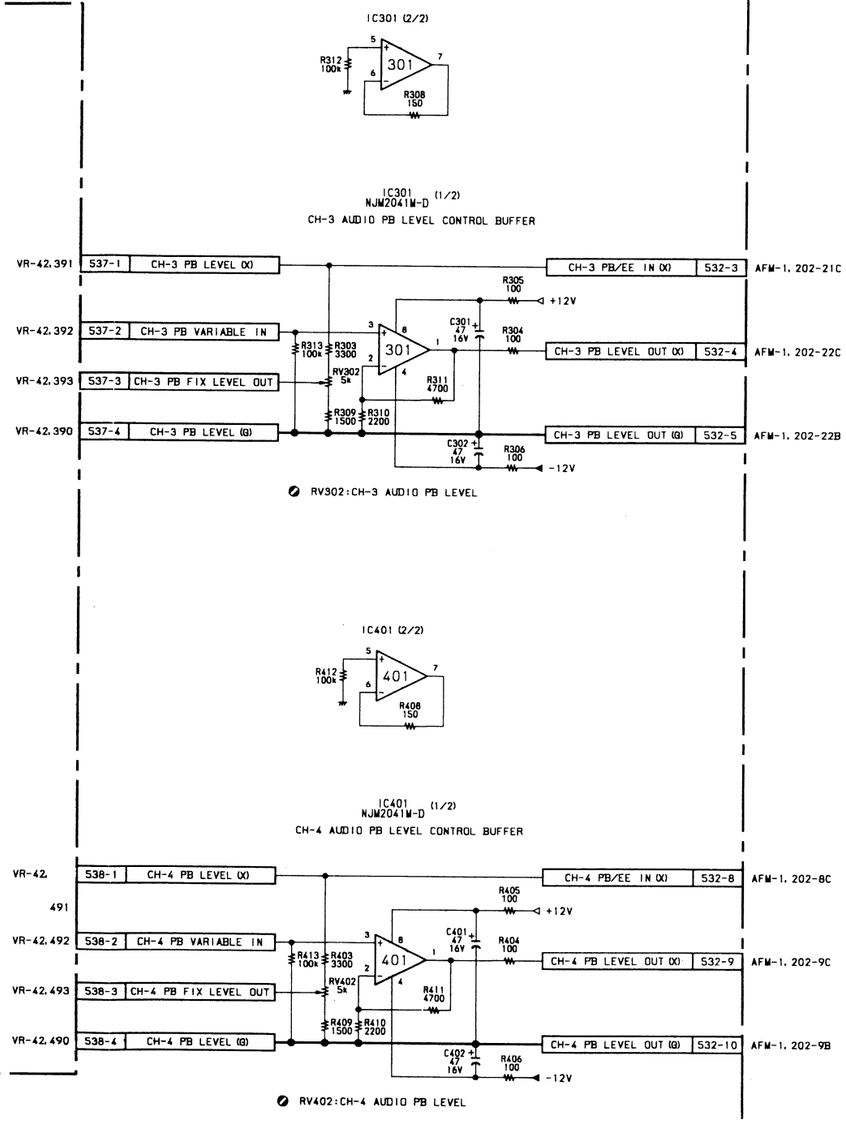


**BF-28A (1/2)**

1-622-574-22
BVW-60P
BVW-65P
BVW-95P

BF-28A (2/2) BF-28A (

# BF-28A (2/2) ; AUDIO LEVEL VU/dB DETECTOR

NOTE

| MARK | CHANGE INFORMATION | SERIAL NO. |
|---|---|---|
| *1 | R926 0 ADDED<br>R927 0 ADDED<br>R928 0 ADDED<br>R929 0 ADDED | S/N 10456 ～ |
| *2 | R908 1M → 560k | S/N 11083 ～ |

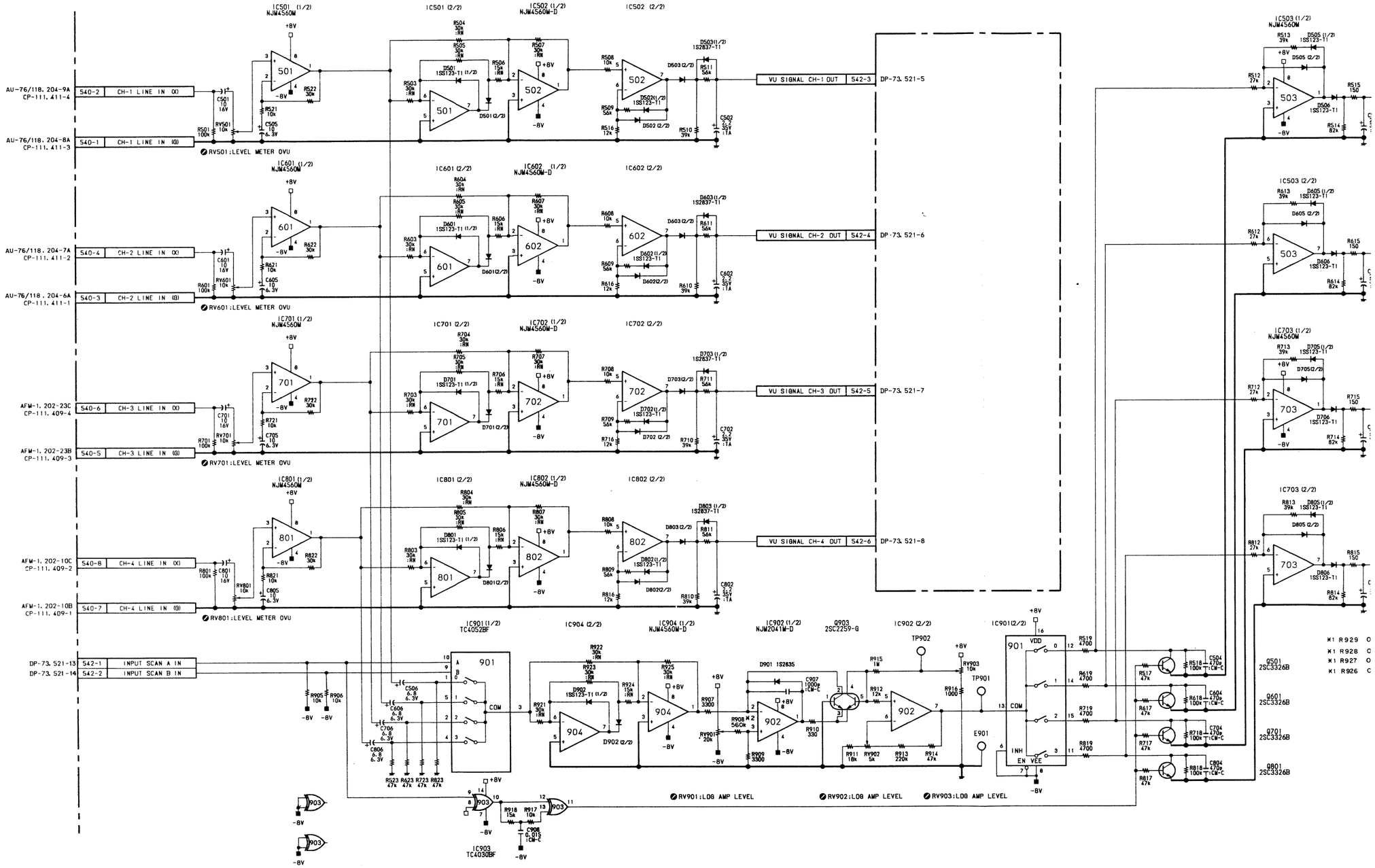

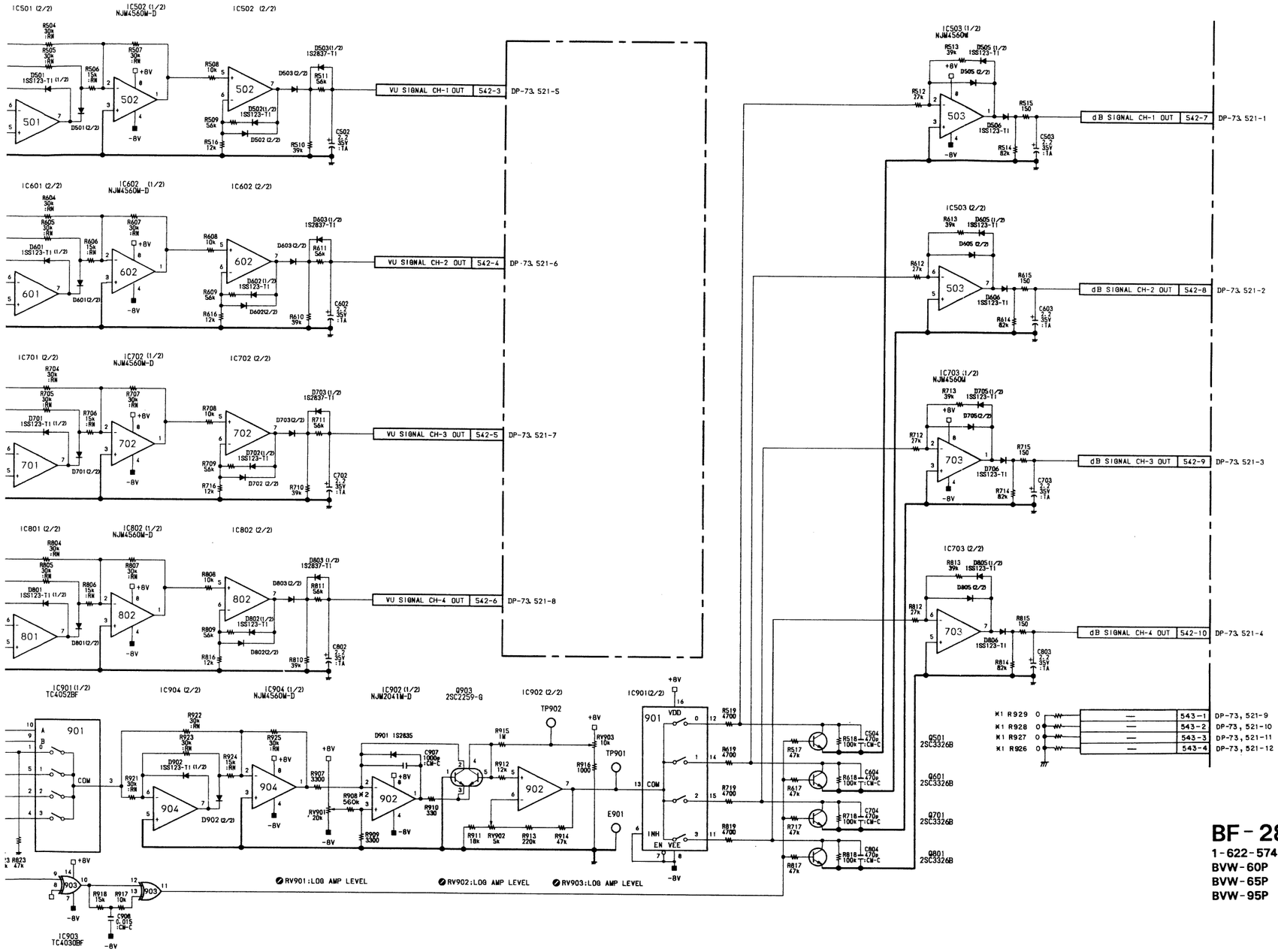


**BF-28A (2/2)**

**1-622-574-21, 22**

**BVW-60P**

**BVW-65P**

**BVW-95P**

# CP-111 (1/4); AUDIO OUTPUT AMPLIFIER/PRIVER
# CP-113; AUDIO BALANCED AMPLIFIER

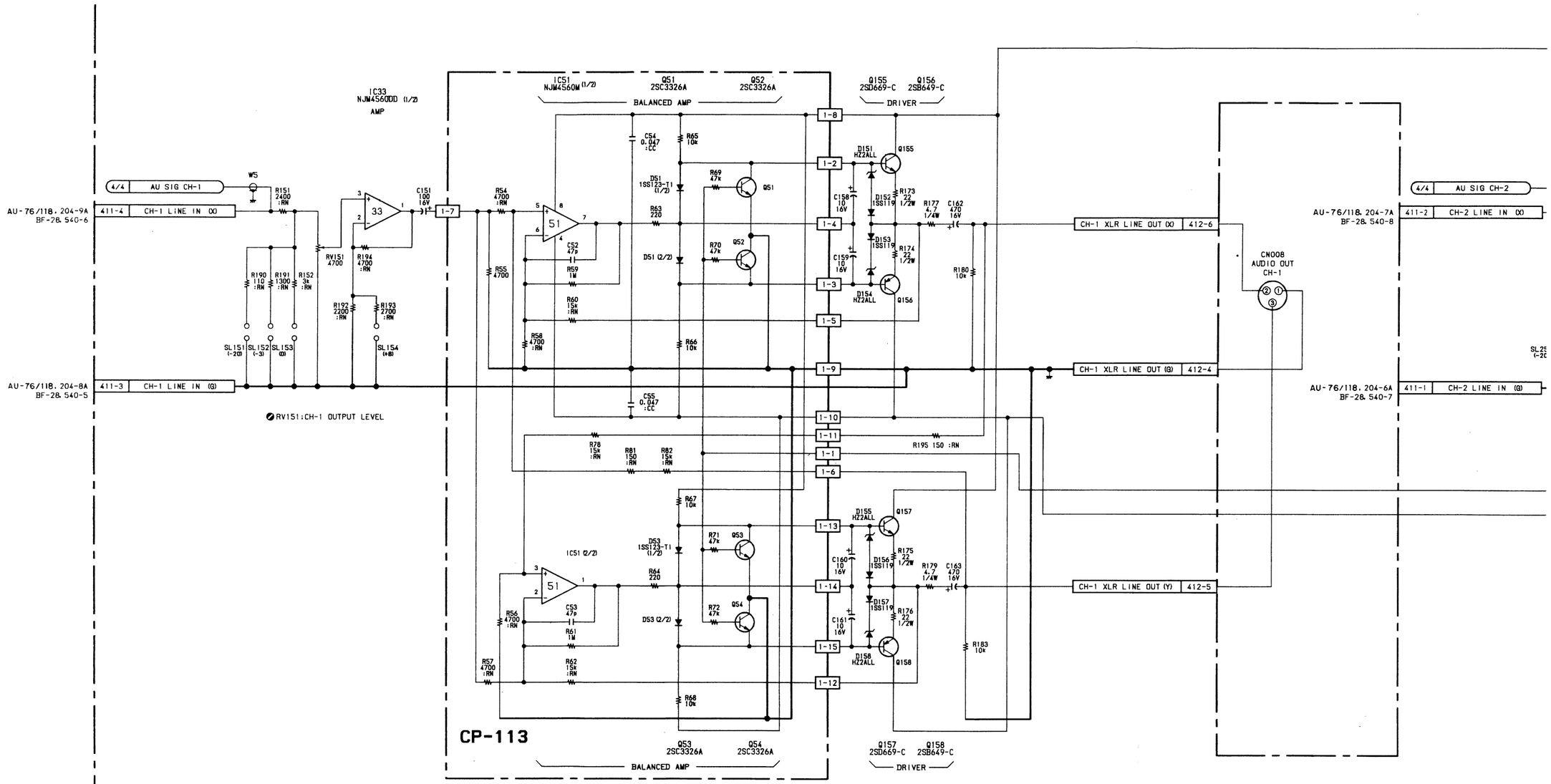

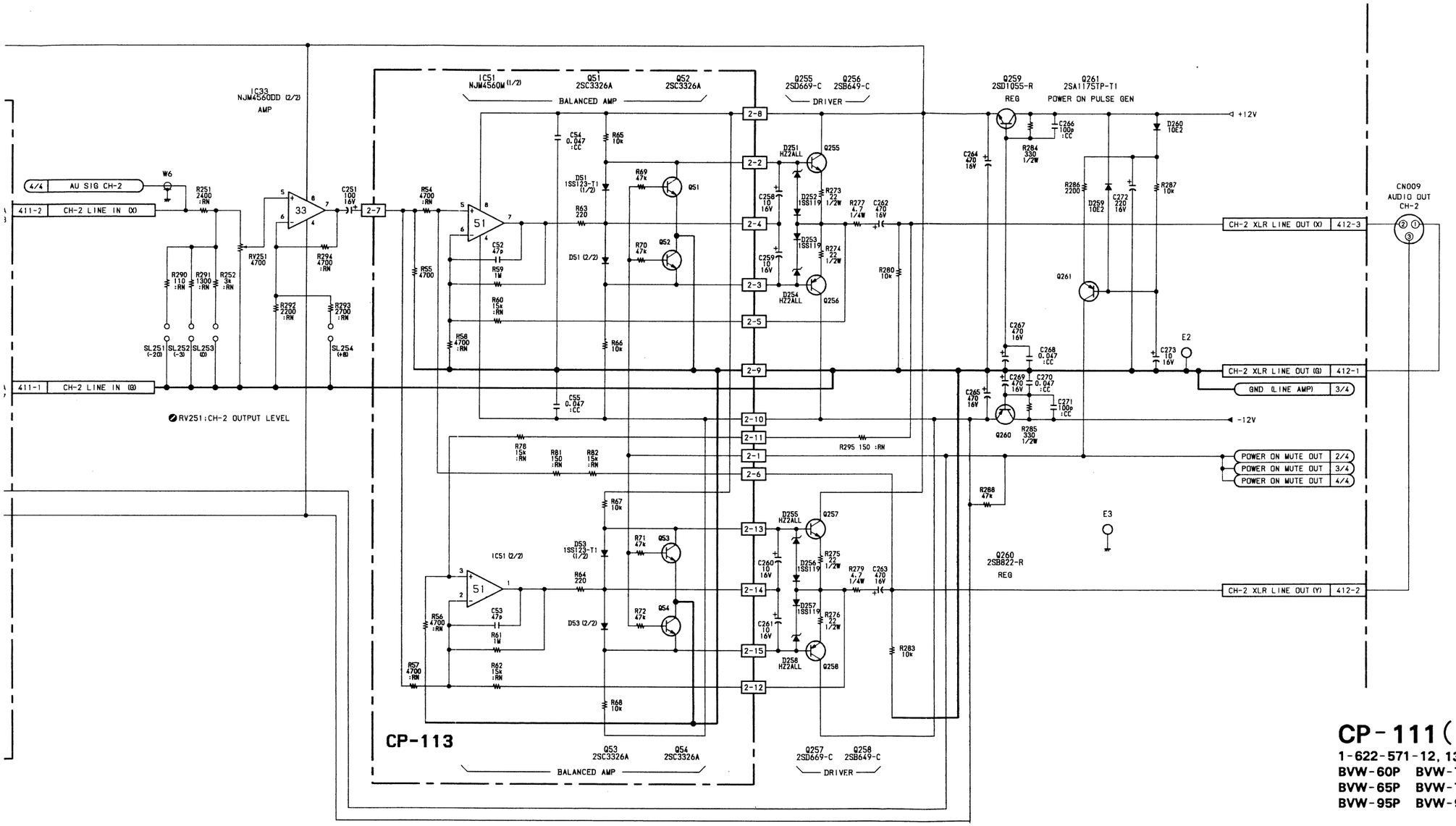


# CP-111 (1/4)

**1-622-571-12, 13**
**BVW-60P BVW-70P**
**BVW-65P BVW-75P**
**BVW-95P BVW-96P**

# CP-111 (2/4) ; AUDIO OUTPUT AMPLIFIER/DRIVER
# CP-113 ; AUDIO BALANCED AMPLIFIER

NOTE

| MARK | CHANGE INFORMATION | SERIAL NO. |
|---|---|---|
| *1 | DELETED E1 | S/N 10928 ~ |

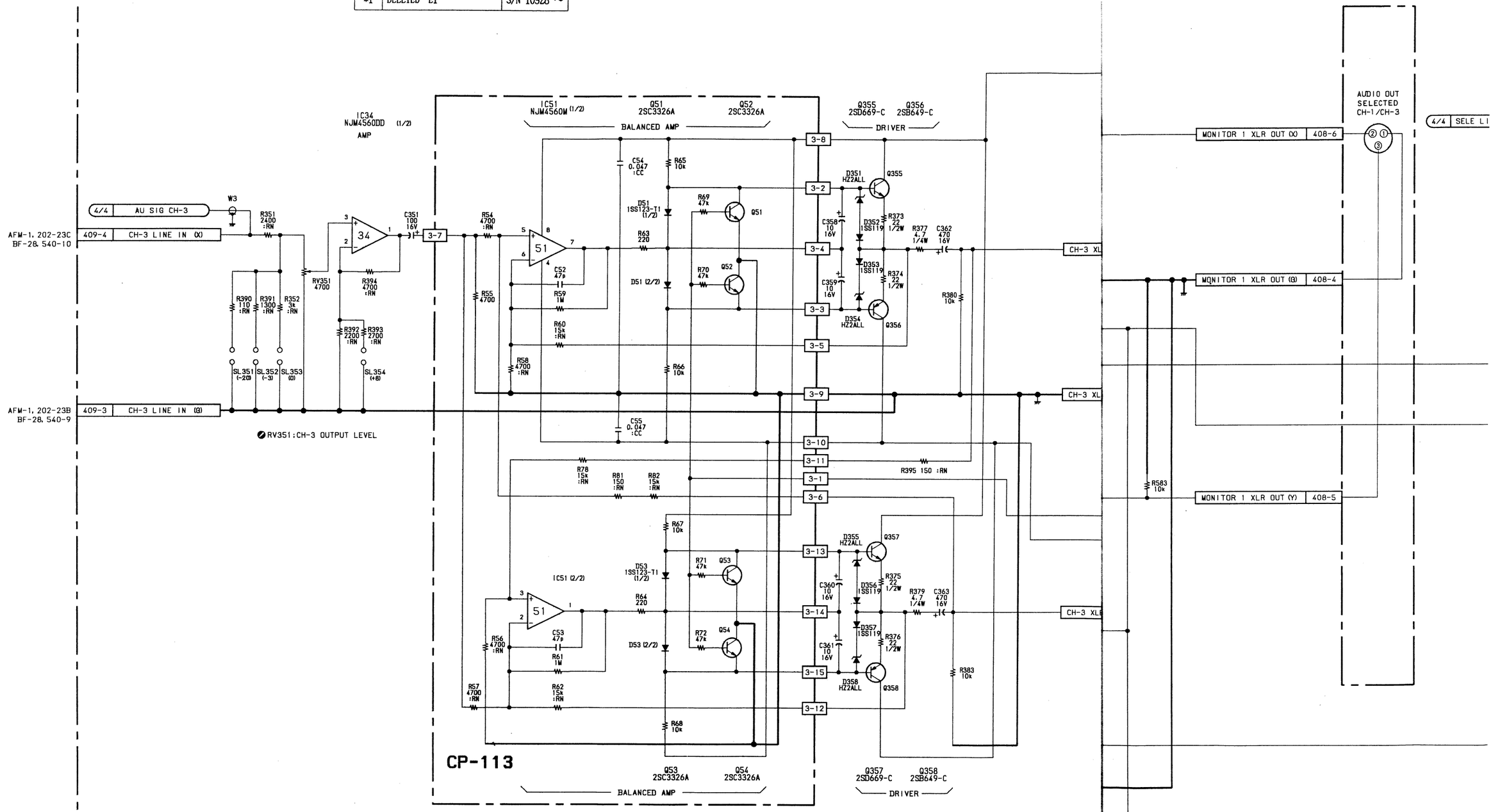

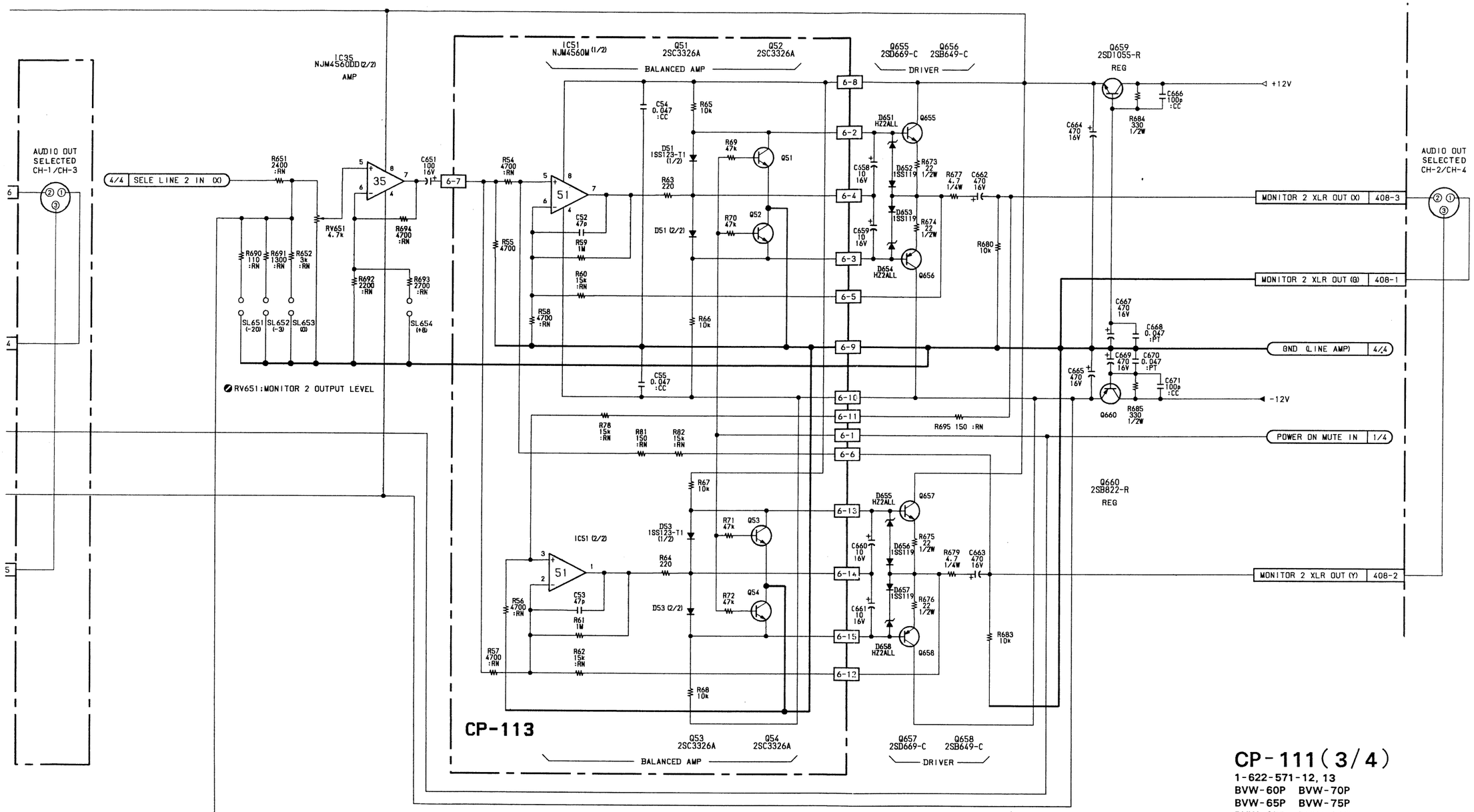


**CP-111 (3/4)**
1-622-571-12, 13
BVW-60P BVW-70P
BVW-65P BVW-75P
BVW-95P BVW-96P

CP-111 (4/4), HP-33, VR-62

**CP-111** (4/4); AUDIO MONITOR SELECT/OUTPUT
**HP-33**; HEADPHONES AMPLIFIER/JACK
**VR-62**; HEADPHONES LEVEL VOLUME

Up to S/N 11037

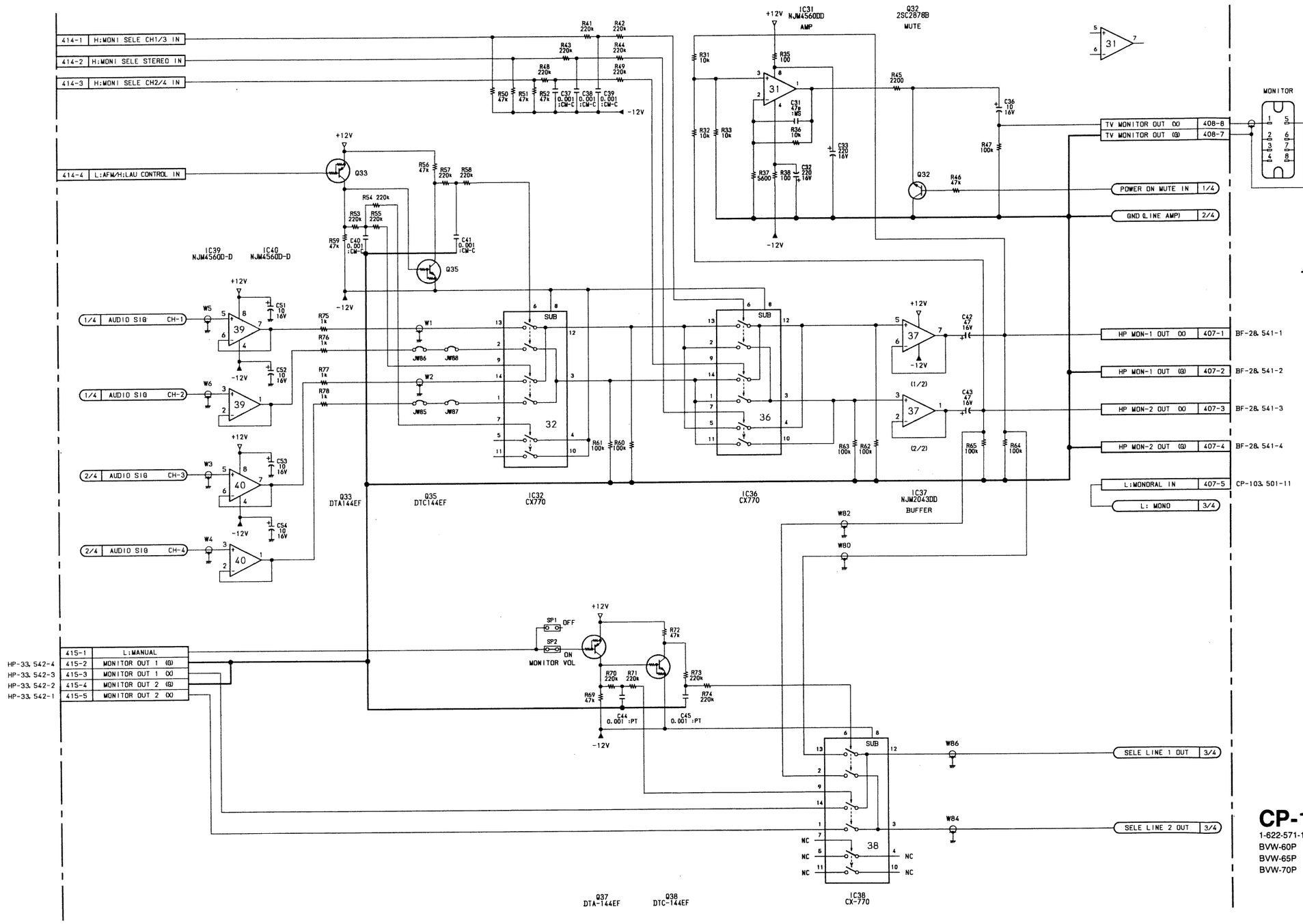


## CP-111 (4/4)

1-622-571-12
BVW-60P BVW-75P
BVW-65P BVW-95P
BVW-70P BVW-96P

16-185 (a)

16-186 (a)

CP-111 (4/4), HP-33, VR-62

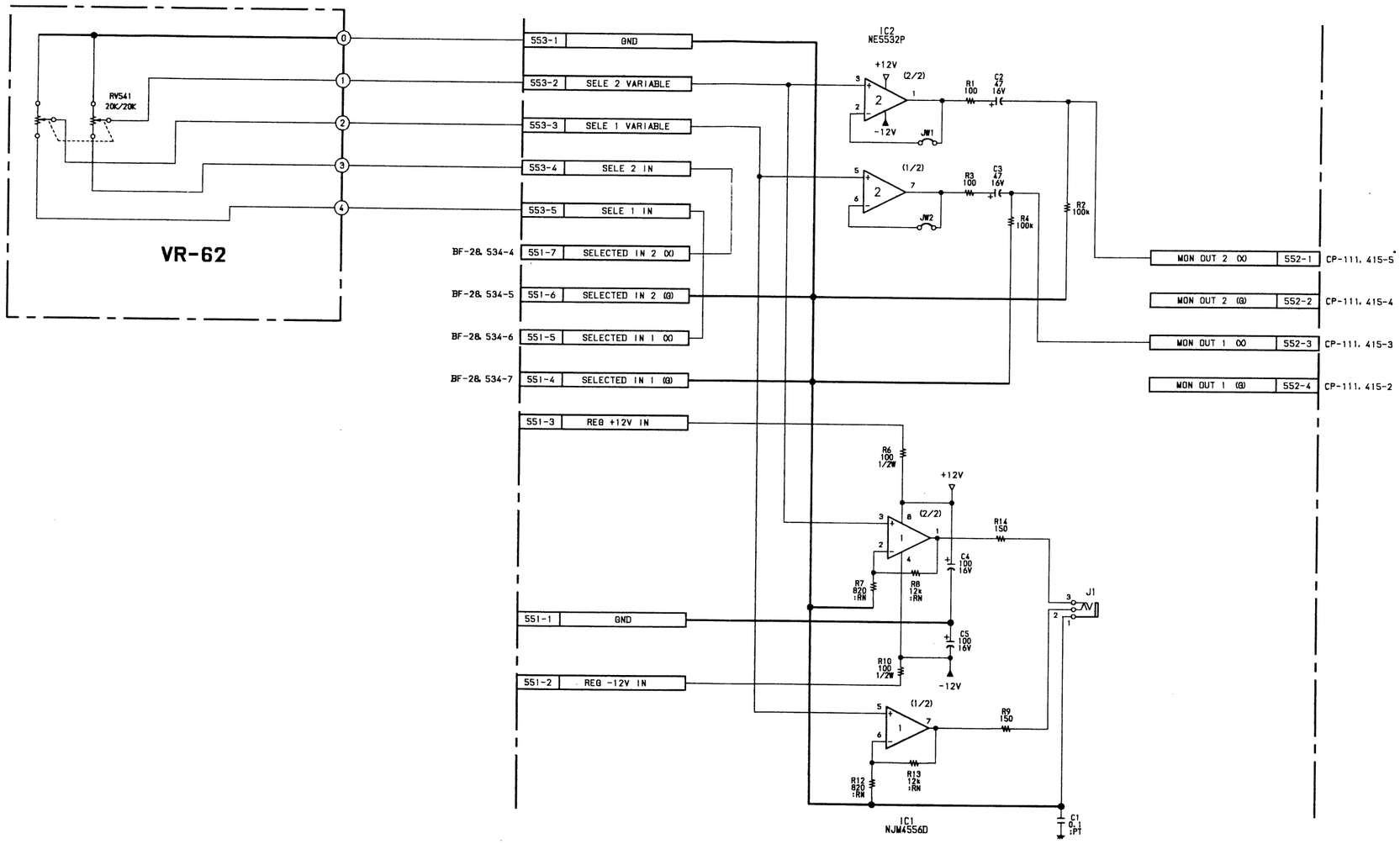


# HP-33

1-622-590-13
BVW-60P BVW-75P
BVW-65P BVW-95P
BVW-70P BVW-96P

CP-111 (4/4), HP-33, VR-62

**CP-111** (4/4) ; AUDIO MONITOR SELECT/
**HP-33** ; HEADPHONES AMPLIFIER/JACK
**VR-62** ; HEADPHONES LEVEL VOLUME

S/N 11038 and higher

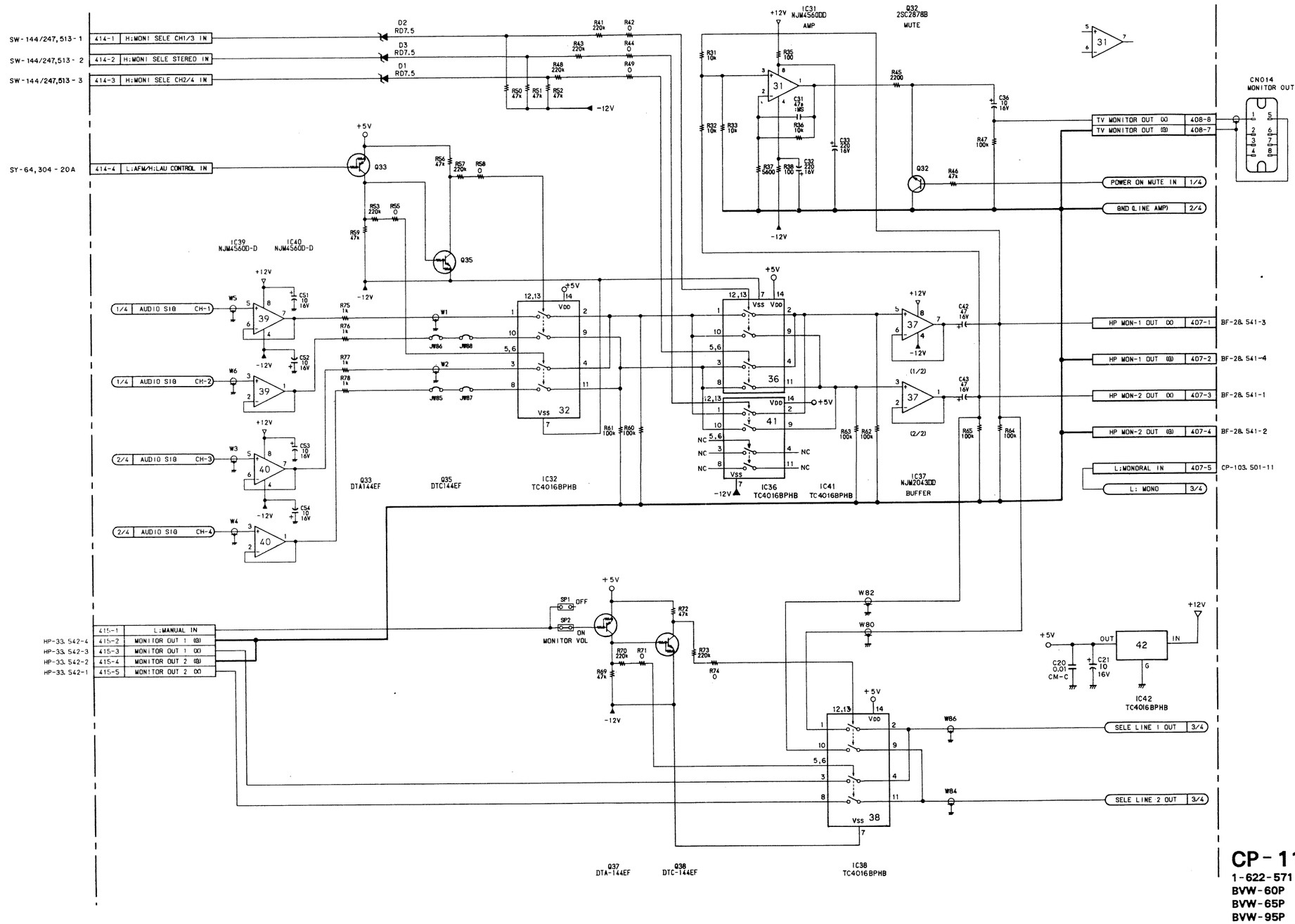


**CP-111 (4/4)**
**1-622-571-13**
**BVW-60P BVW-70P**
**BVW-65P BVW-75P**
**BVW-95P BVW-96P**

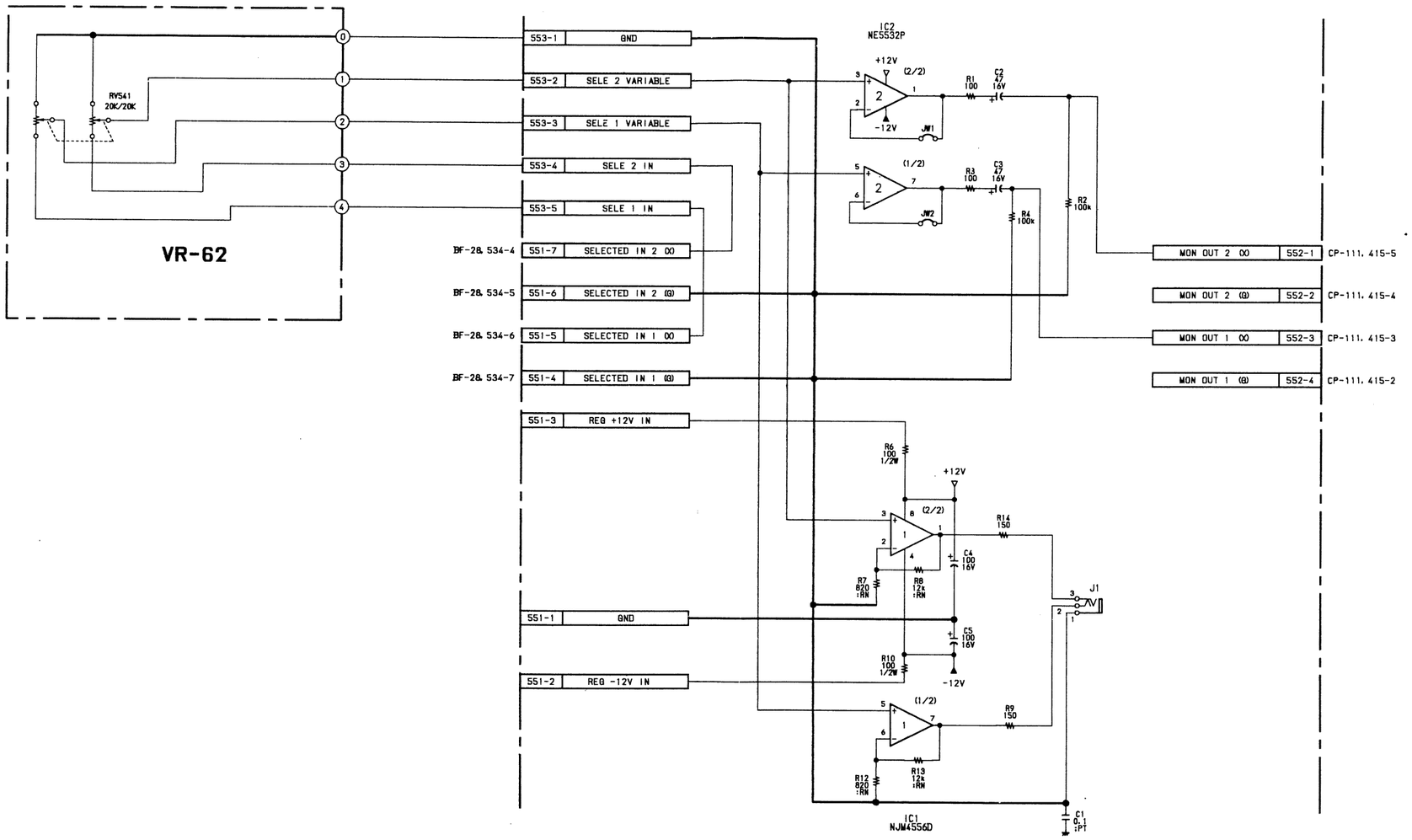


# HP-33

1-622-590-13

BVW-60P BVW-75P
BVW-65P BVW-95P
BVW-70P BVW-96P

**SW-144A;** SELECT SWITCH/DISPLAY
**VR-61;** TRACKING CONTROL VOLUME
**DP-72;** RF METER LED
**DP-74;** AUDIO LEVEL METER
**DP-73;** DC-AC/DC CONVERTER

NOTE

| MARK | CHANGE INFORMATION | SERIAL NO. |
|---|---|---|
| *1 | L103 47μH ADDED | S/N 10171 ~ |

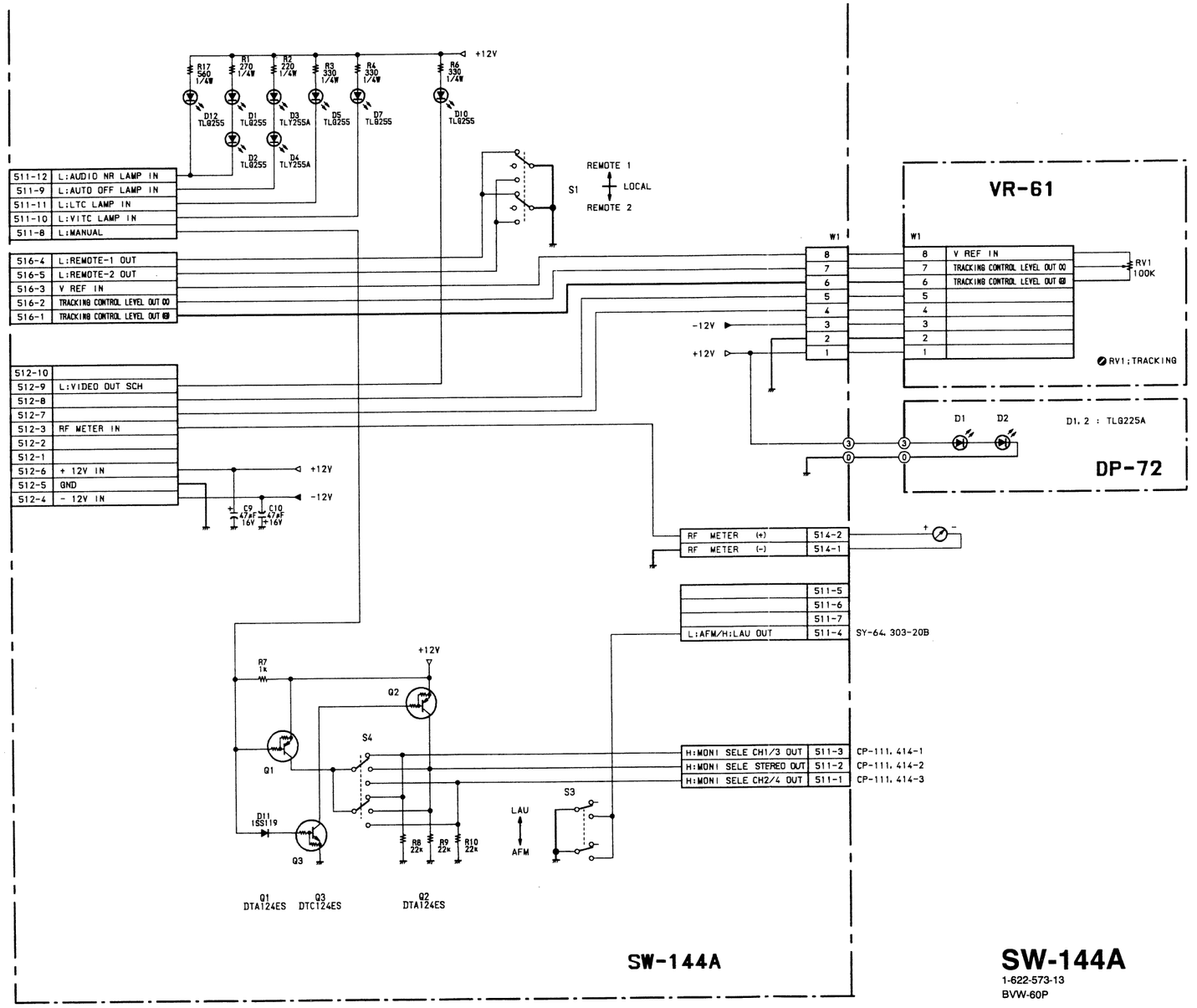


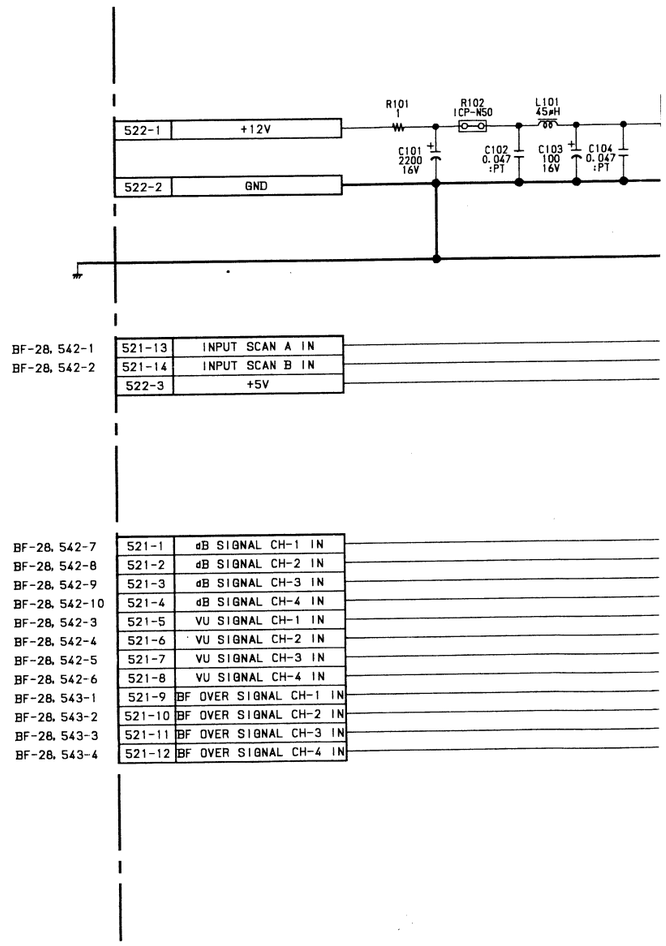


**SW-144A**
1-622-573-13
BVW-60P

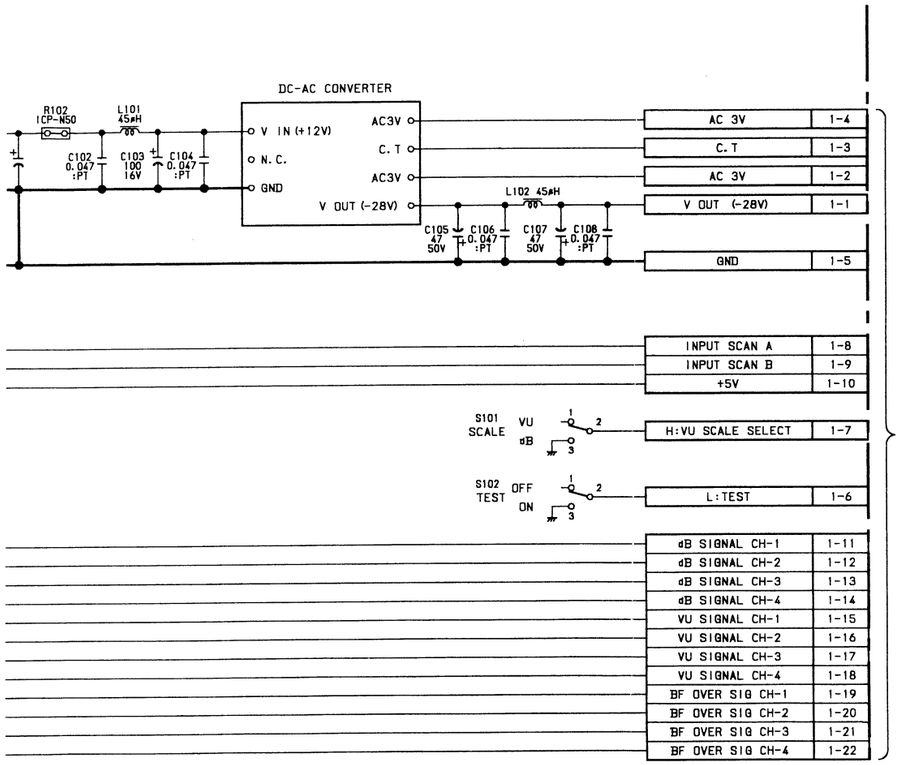


**DP-73**
1-622-575-12
BVW-60P BVW-75P
BVW-65P BVW-95P
BVW-70P BVW-96P

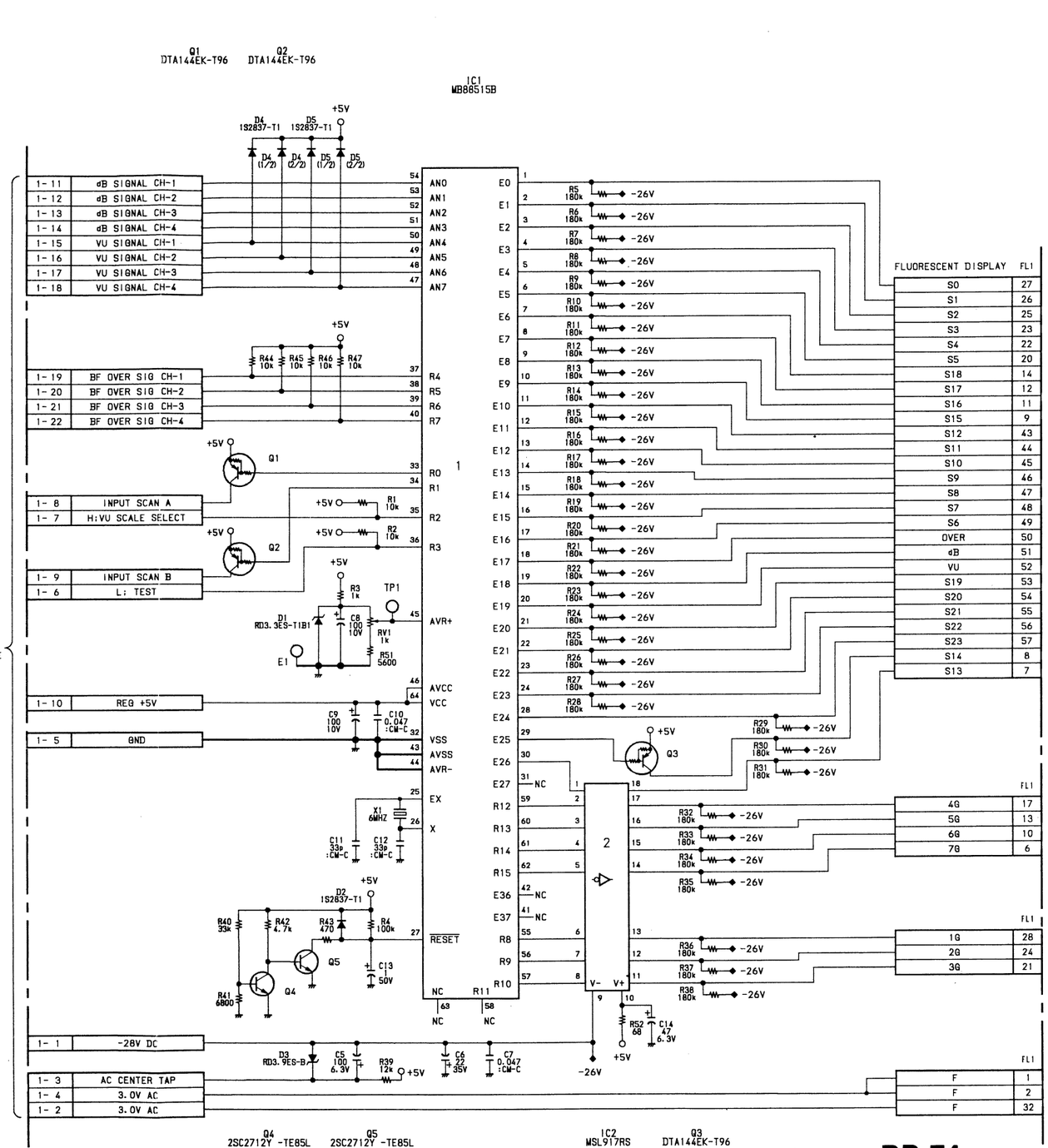


**DP-74**
1-622-576-12
BVW-60P BVW-75P
BVW-65P BVW-95P
BVW-70P BVW-96P

# SV-82A (1/2); COUNTER

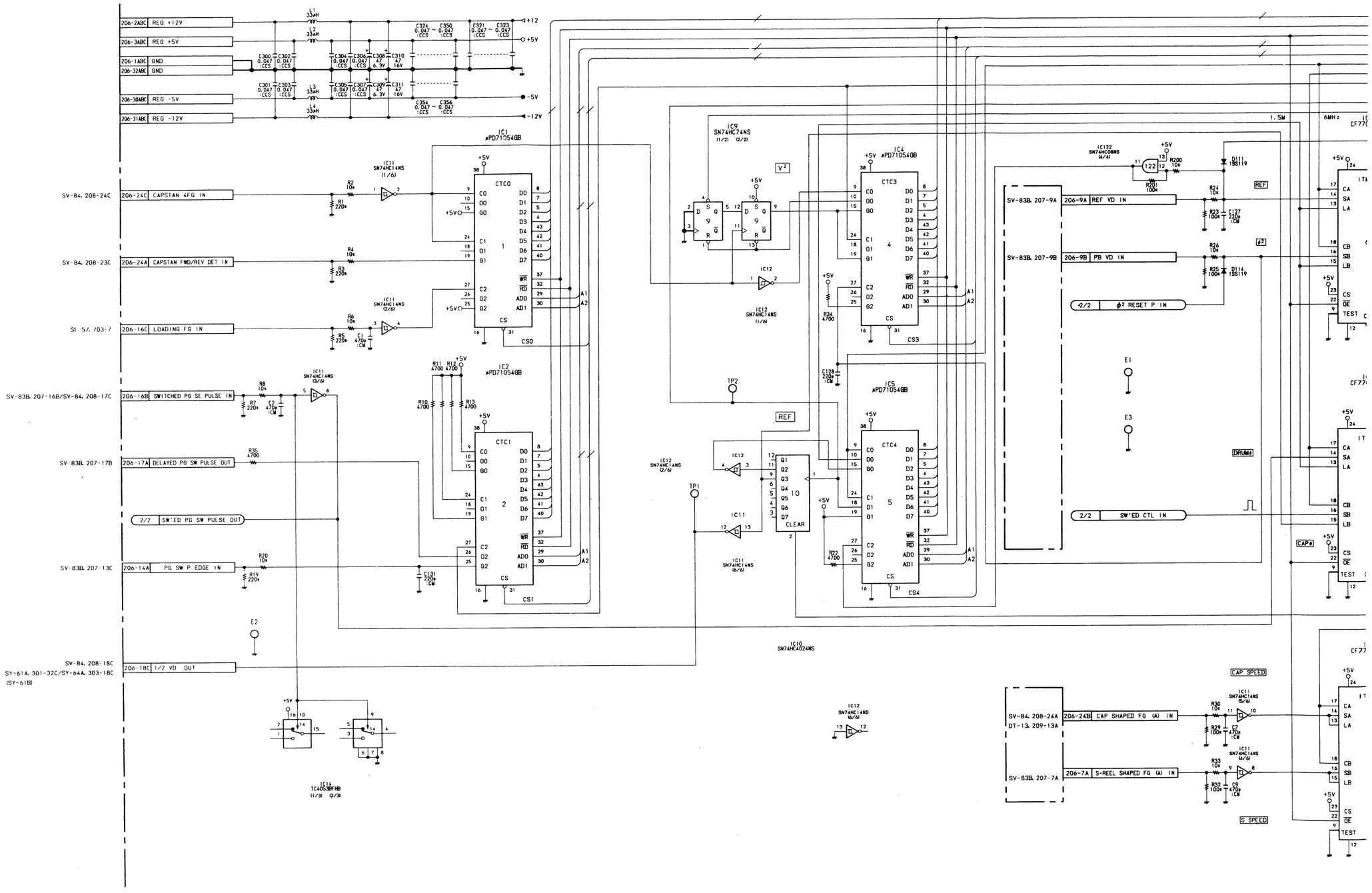

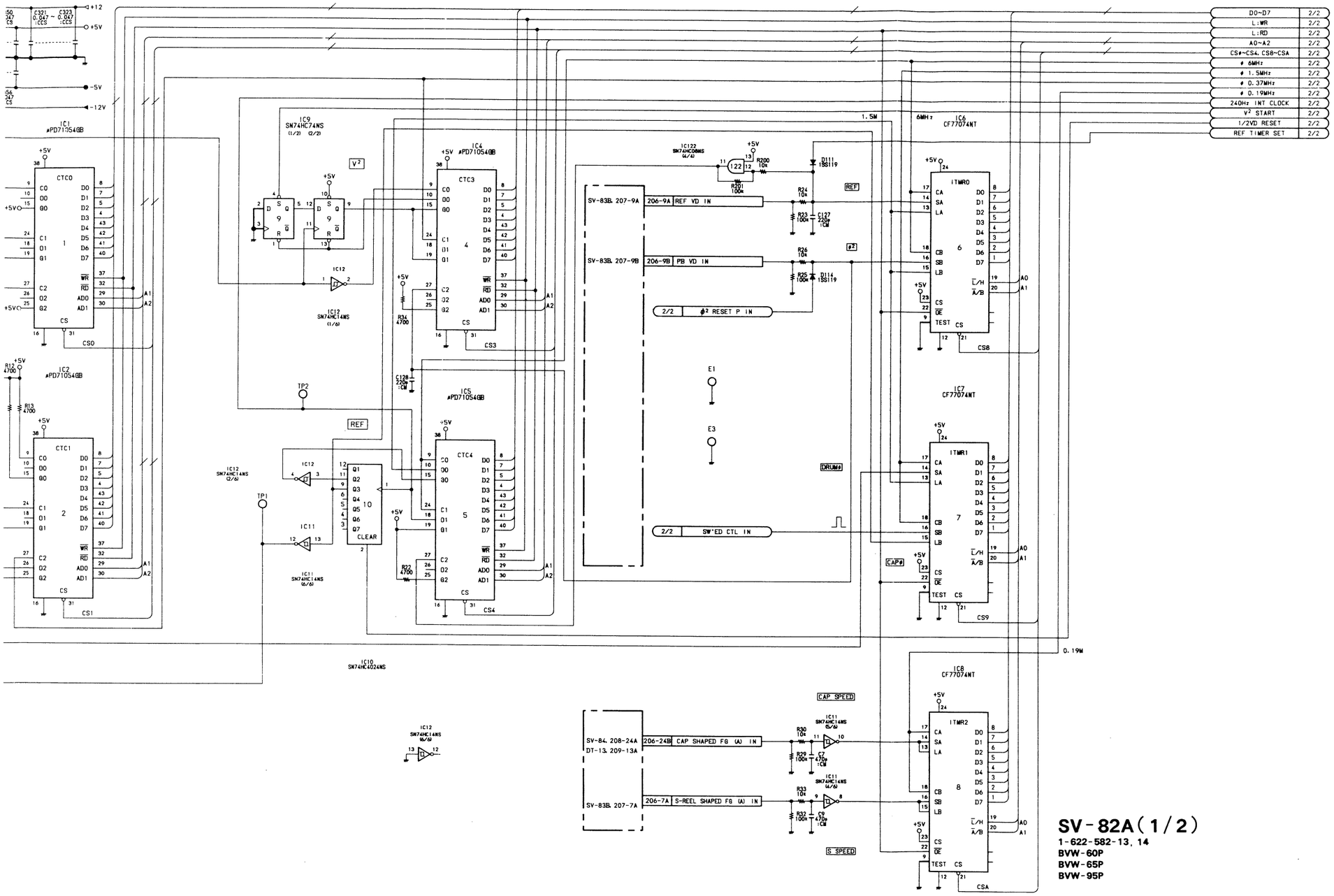


**SV-82A (1/2)**
**1-622-582-13, 14**
**BVW-60P**
**BVW-65P**
**BVW-95P**

SV-82A (2/2) SV-82A (

# SV-82A (2/2) ; MICROCOMPUTER SERVO

NOTE

| MARK | CHANGE INFORMATION | SERIAL NO. |
|---|---|---|
| *1 | D1 1SS119 ADDED<br>D2 1SS119 ADDED | S/N 10271 ~ |

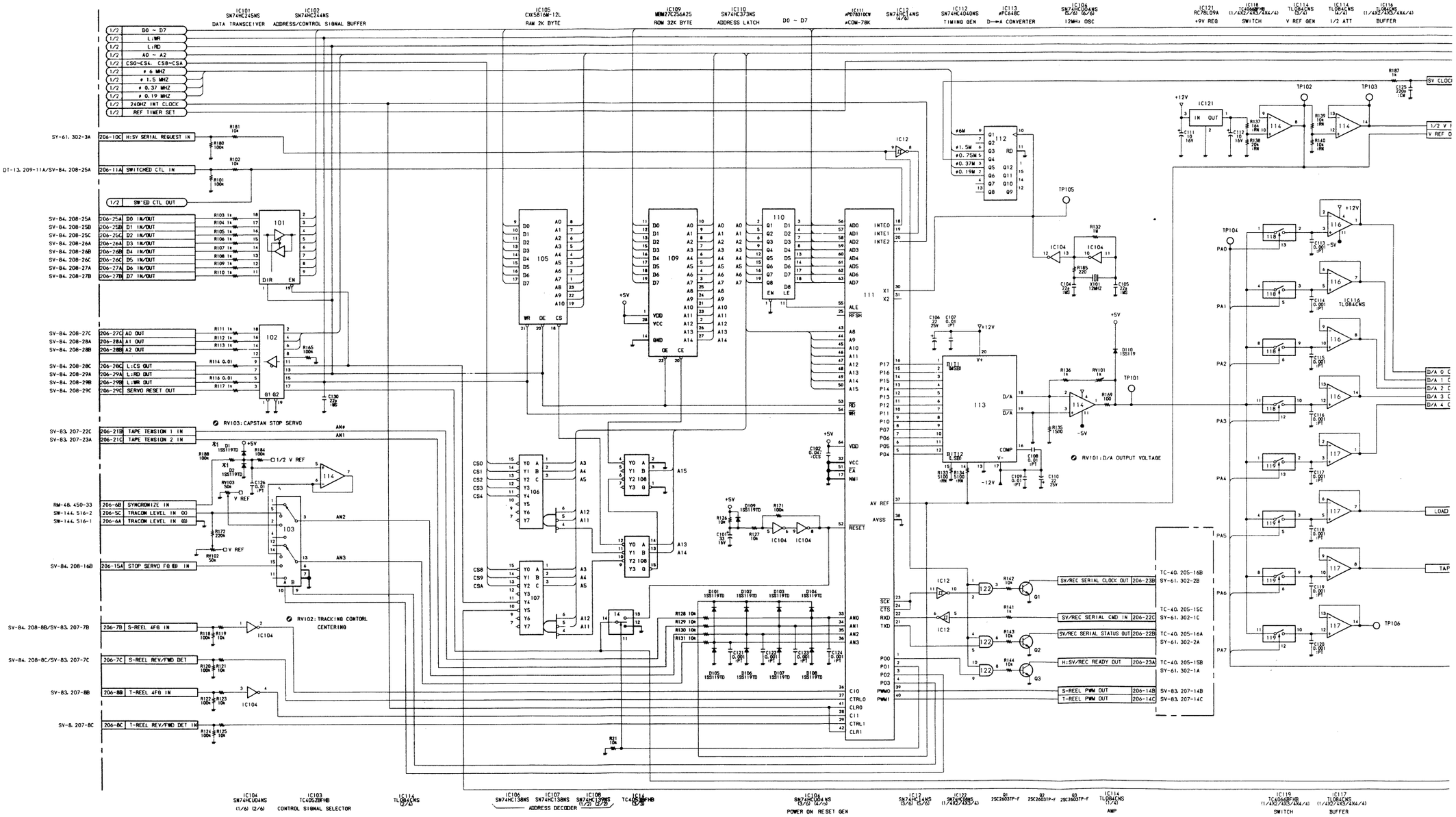

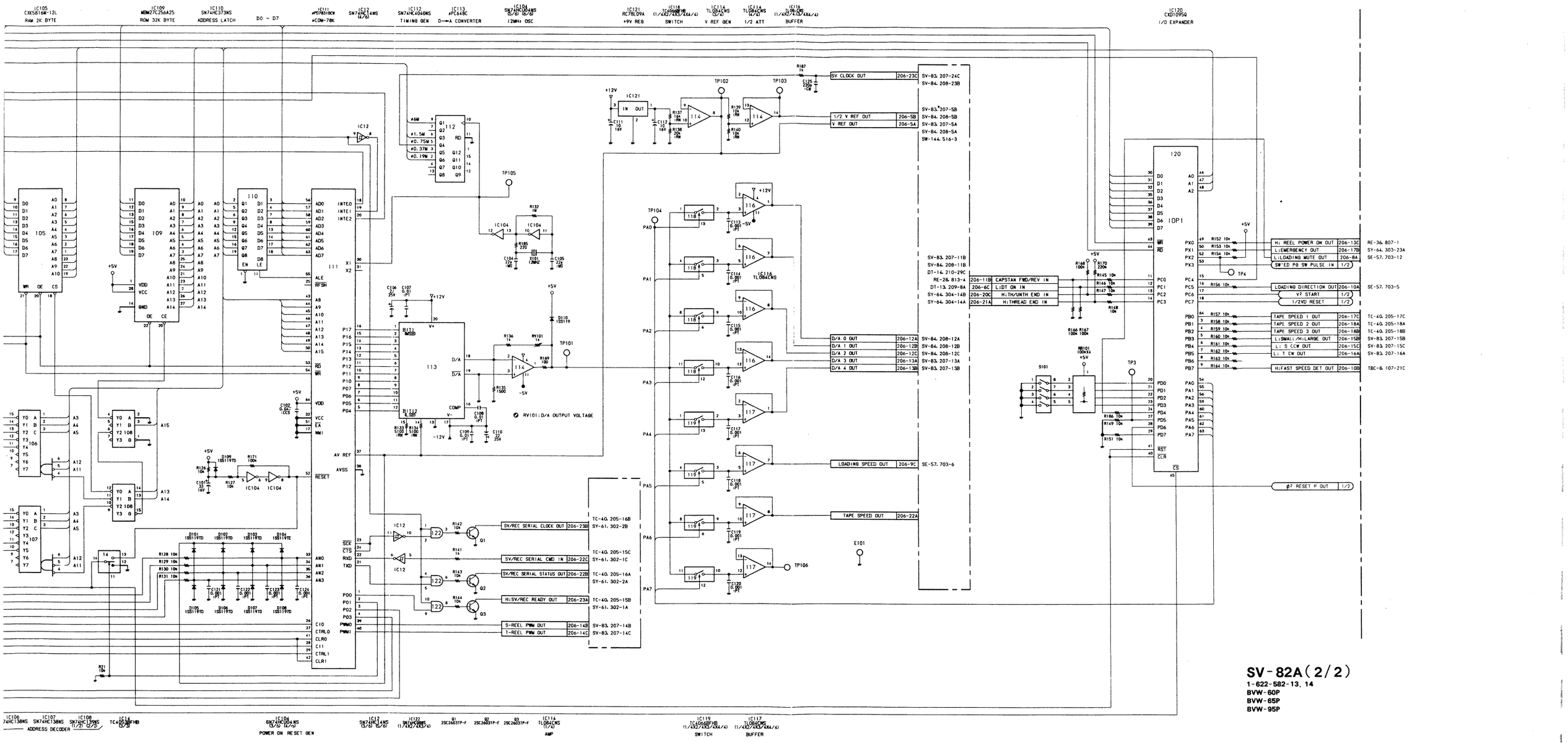


**SV-82A(2/2)**
**1-622-582-13, 14**
**BVW-60P**
**BVW-65P**
**BVW-95P**

16-207

16-208

E F G H I J K L

# SV-83B (1/2); REEL SERVO

NOTE

| MARK | CHANGE INFORMATION | SERIAL NO. |
|---|---|---|
| *1 | C22 0.033→0.022<br>C25 0.033→0.022<br>C28 0.033→0.022<br>C33 0.033→0.022 | S/N 10913 ～ |

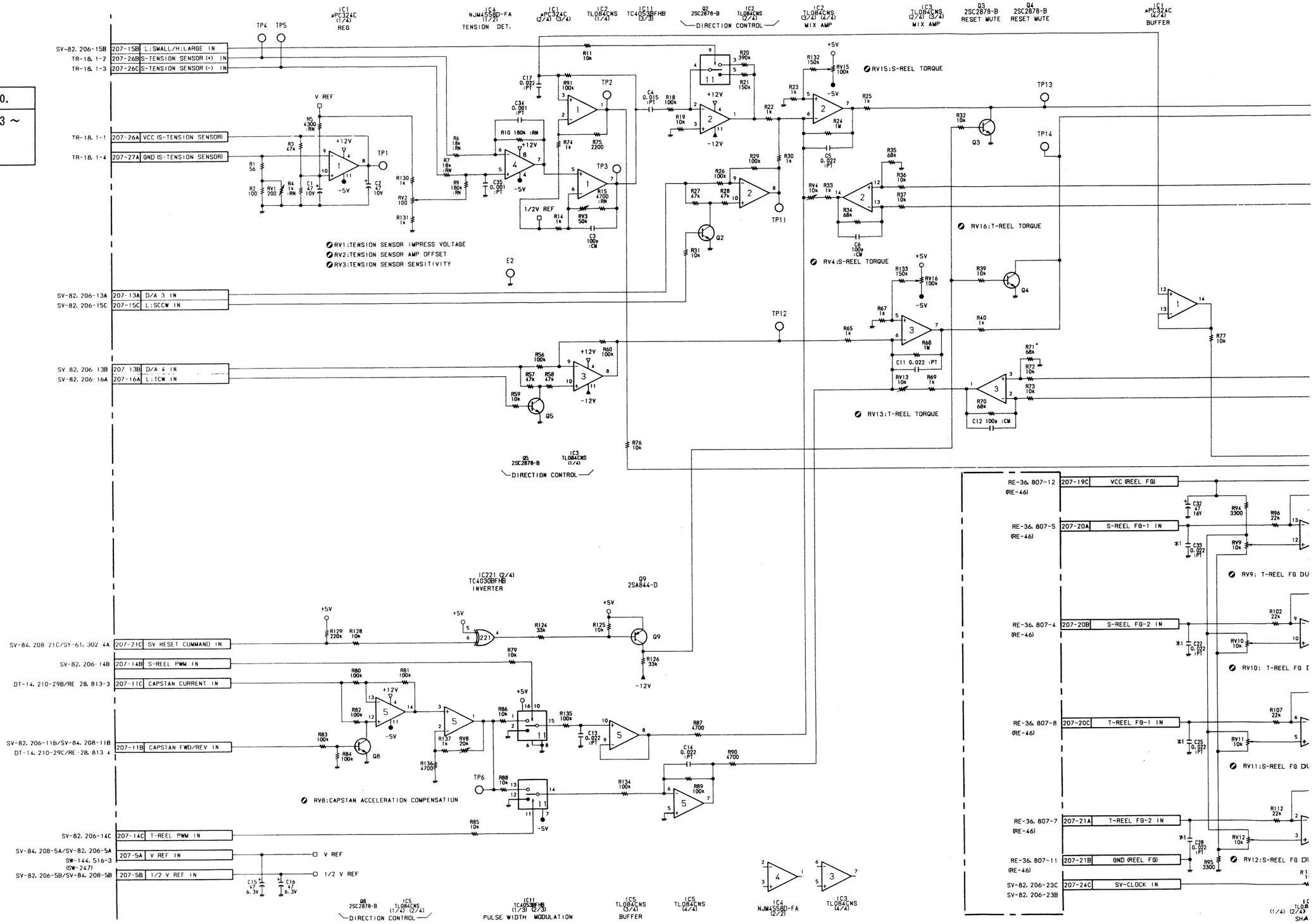

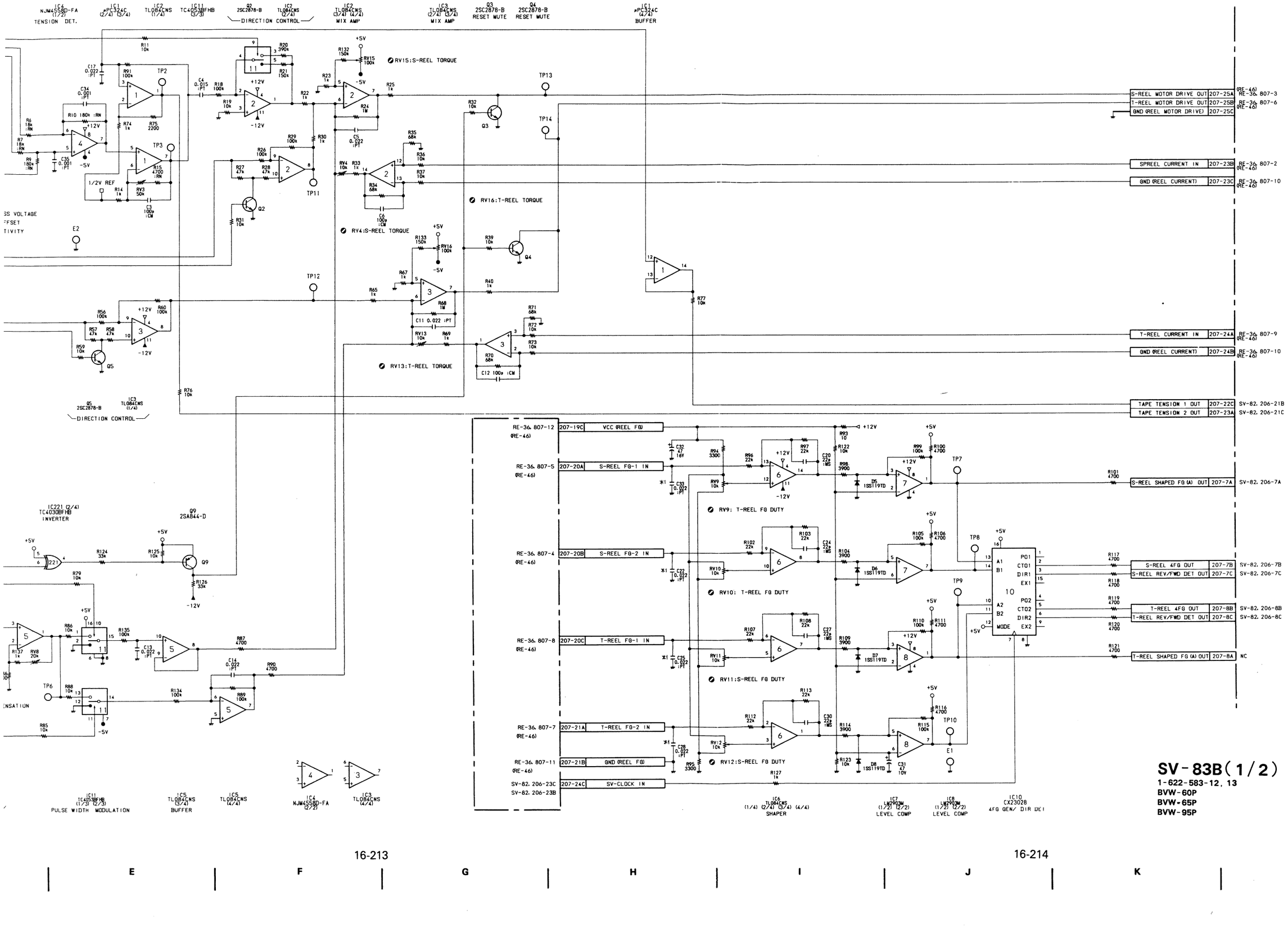


**SV-83B (1/2)**
1-622-583-12, 13
BVW-60P
BVW-65P
BVW-95P



E F G H I J K L

SV-83B (2/2) SV-83B (

# SV-83B (2/2); SW PULSE/VD GENERATOR

NOTE

| MARK | CHANGE INFORMATION | SERIAL NO. |
|---|---|---|
| *1 | IC220 TC74HC160F → TC74HC161F | S/N 11038 ~ |

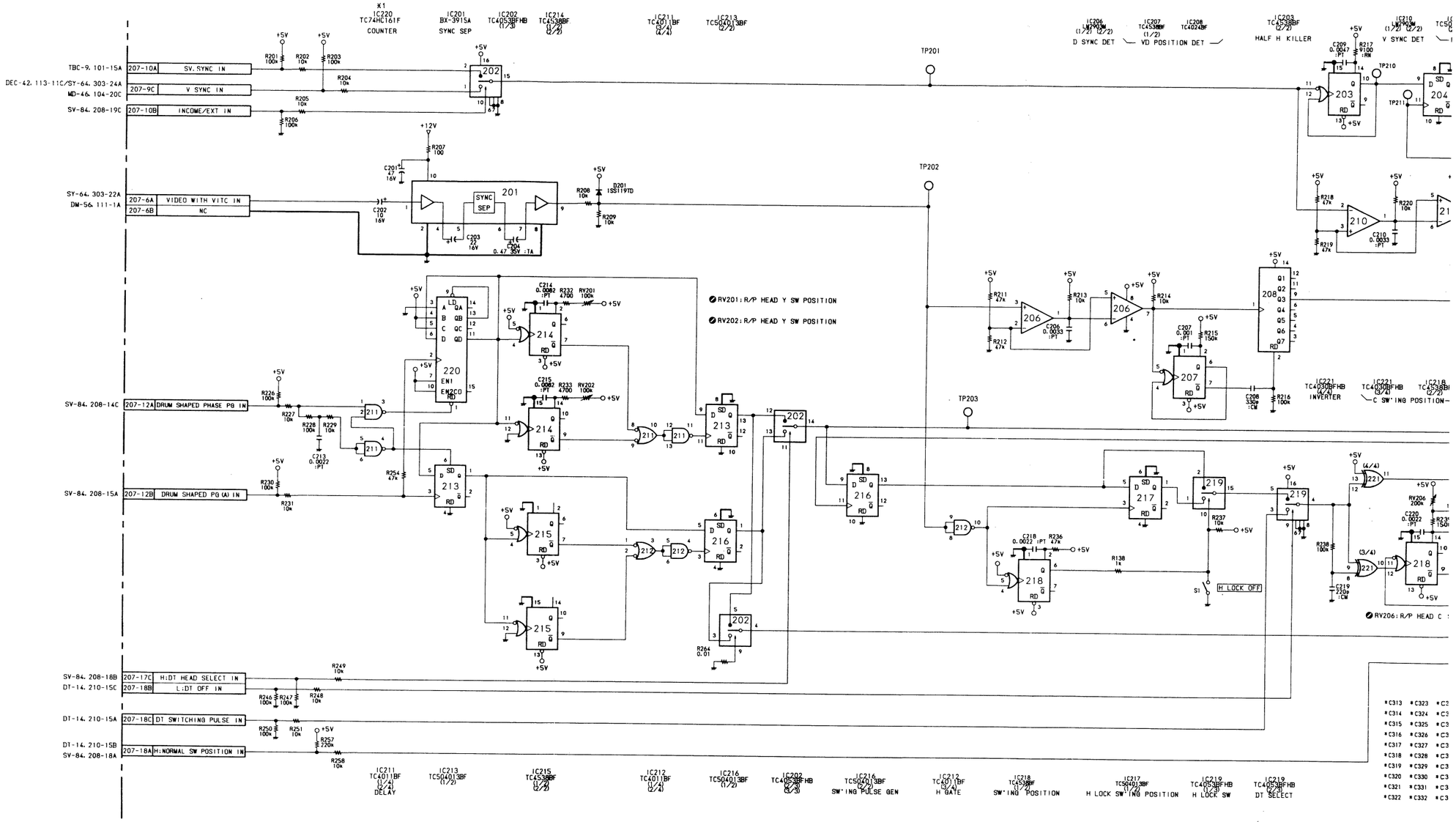

IC201 BX-3915A SYNC SEP
IC202 TC4053BFHB (1/3)
IC214 TC4538BF (1/2) (2/2)
IC211 TC4011BF (3/4) (2/4)
IC213 TC5040J3BF (2/2)
IC204 TC4538BF (1/2) (2/2) D SYNC DET
IC207 TC4538BF (1/2) VD POSITION DET
IC208 TC4024BF
IC203 TC4538BF (2/2) HALF H KILLER
IC210 TC4538BF (1/2) (2/2) V SYNC DET
IC204 TC5040J3BF (2/2) REF VD GEN
IC203 TC4538BF (1/2)
IC207 TC4538BF (2/2) VD POSITION DET
IC209 TC4024BF
IC205 TC4081BF (1/4)

TP201 TP202 TP203 TP204 TP205 TP207 TP208 TP210 TP211

RV201: R/P HEAD Y SW POSITION
RV202: R/P HEAD Y SW POSITION
RV206: R/P HEAD C SW POSITION
RV210 : REF VD POSITION

IC205 TC4081BF (3/4) EDGE DET
IC221 TC4030BFHB (1/4)
IC221 TC4030BFHB (2/4) INVERTER
IC221 TC4030BFHB (3/4) C SW'ING POSITION
IC218 TC4538BF (2/2)
IC219 TC4053BFHB (3/3)
IC217 TC5040J3BF (2/2) C SW'ING PULSE GEN

H LOCK OFF

REF VD OUT 207-9A SV-82. 206-9A
PB VD OUT 207-9B SV-82. 206-9B
PG SW PULSE EDGE OUT 207-13C SV-82. 206-14A
SWITCHED PG SW PULSE OUT 207-16B SV-82. 206-16B/SV-84. 208-17C
DELAYED PG SW PULSE IN 207-17B SV-82. 206-17A
Y SWITCHING PULSE OUT 207-19A A VD-18. 103-26C B DM-56. 110-14C
C SWITCHING PULSE OUT 207-19B A VD-18. 103-27C B DM-56. 111-13C AFM-1. 202-28C
DT PG SWITCH PULSE OUT 207-17A DT-14. 210-8A
TBC SWITCHING PULSE OUT 207-16C TBC-8. 107-2B

IC212 TC4011BF (4/4)
IC204 TC5040J3BF (1/2)
IC205 TC4081BF (2/4) (4/4)

REG +12V 207-2ABC
REG +5V 207-3ABC
GND 207-1ABC
GND 207-32ABC
REG -5V 207-30ABC
REG -12V 207-31ABC

*C313 *C323 *C333 *C352
*C314 *C324 *C334 *C353
*C315 *C325 *C335 *C354
*C316 *C326 *C336 *C355
*C317 *C327 *C337 *C356
*C318 *C328 *C338
*C319 *C329 *C339
*C320 *C330 *C340
*C321 *C331 *C350
*C322 *C332 *C351

IC213 TC5040J3BF (1/2)
IC215 TC4538BF (1/2) (2/2)
IC212 TC4011BF (1/4) (2/4)
IC216 TC5040J3BF (1/2)
IC202 TC4053BFHB (2/3) (3/3)
IC216 TC5040J3BF (2/2) SW'ING PULSE GEN
IC212 TC4011BF (3/4) H GATE
IC218 TC4538BF (1/2) SW'ING POSITION
IC217 TC5040J3BF (1/2) H LOCK SW'ING POSITION
IC219 TC4053BFHB (1/3) H LOCK SW
IC219 TC4053BFHB (2/3) DT SELECT

**SV-83B(2/2)**
**1-622-583-12, 13**
**BVW-60P**
**BVW-65P**
**BVW-95P**

16-219 16-220

E F G H I J K L

# SV-84P (1/2); CAPSTAN SERVO

NOTE

| MARK | CHANGE INFORMATION | SERIAL NO. |
|---|---|---|
| *1 | R22 6800 → 8200 | S/N 10356 ~ |

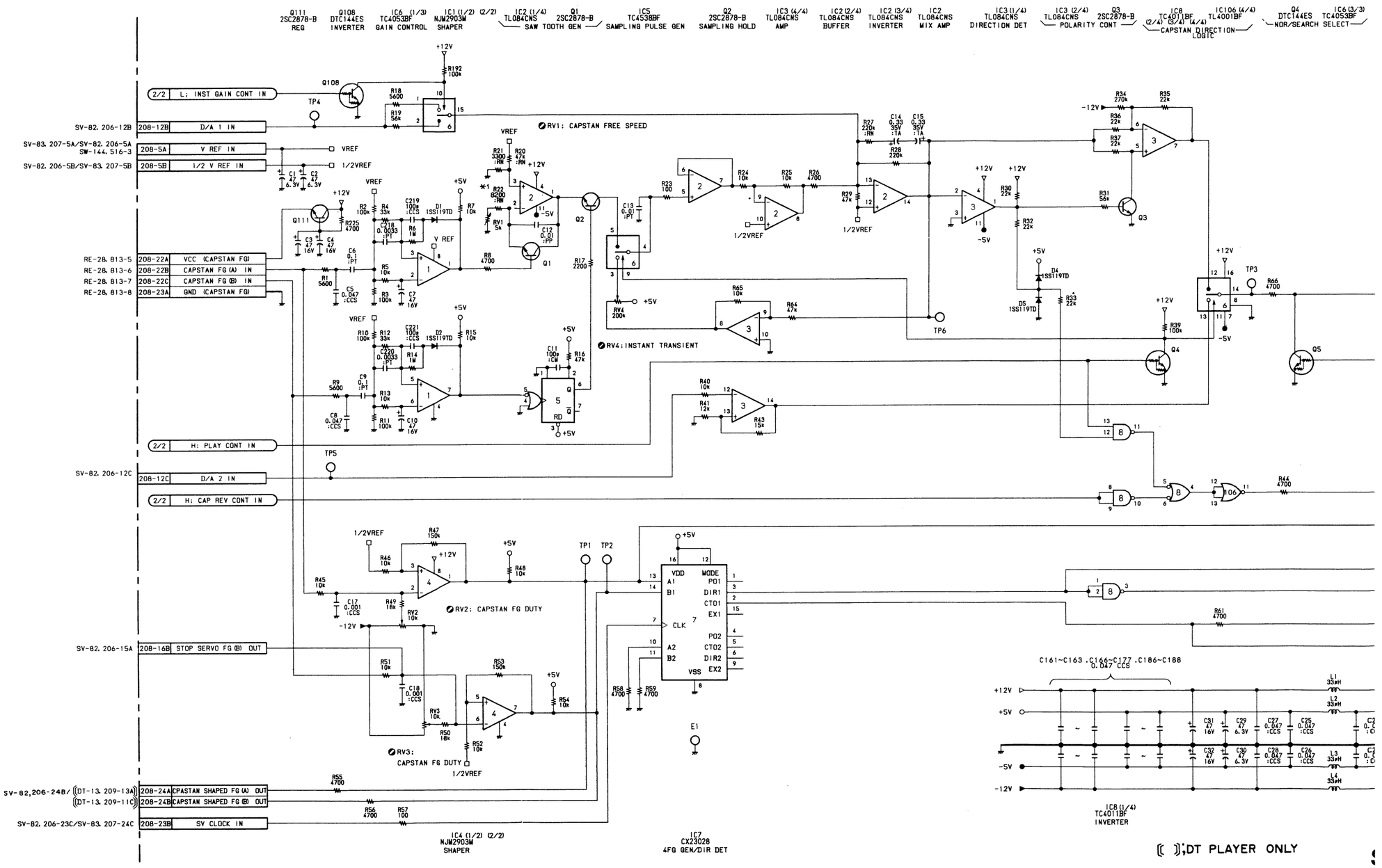

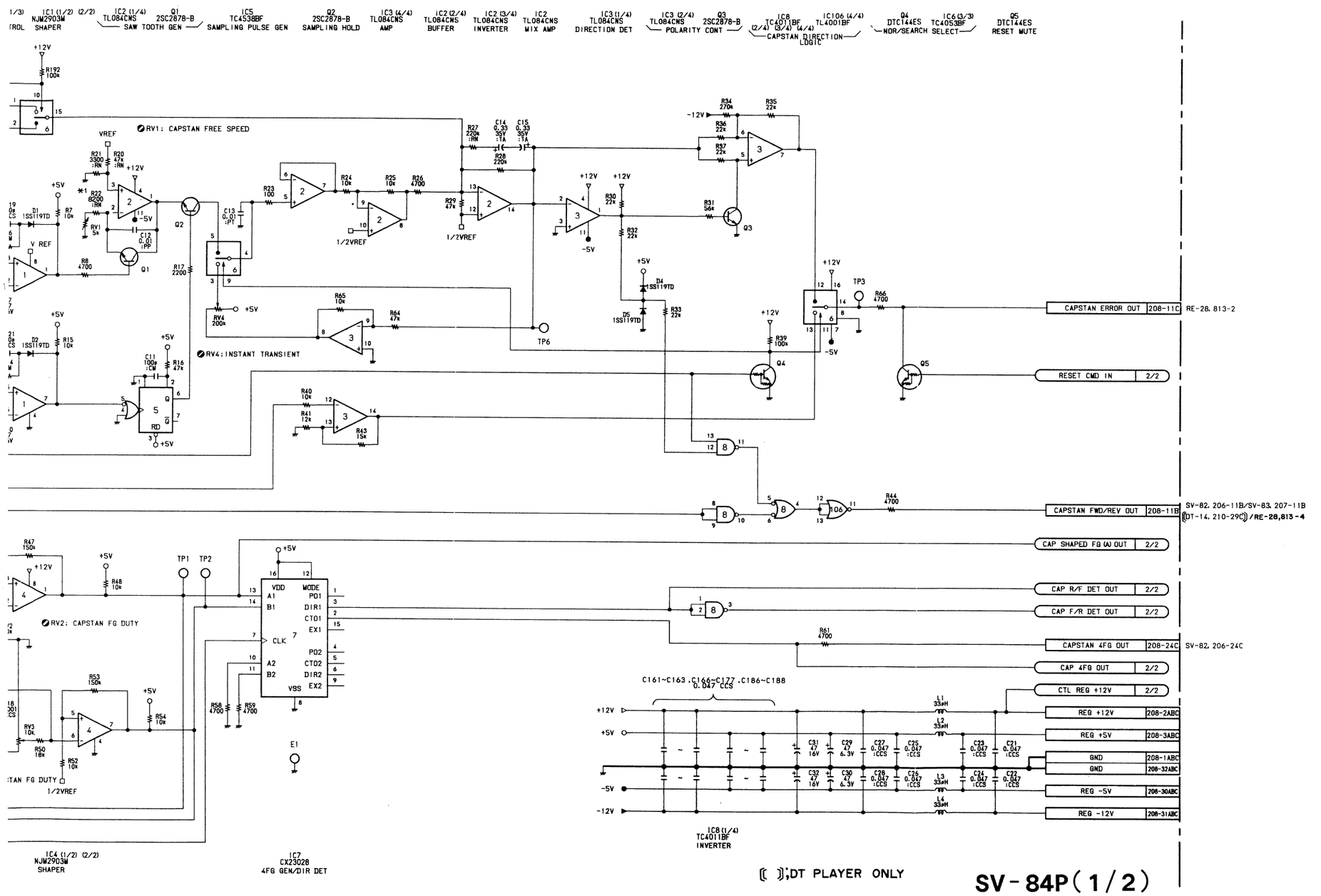


[ ] : DT PLAYER ONLY

# SV-84P (1/2)

**1-622-584-13**

**BVW-60P BVW-70P**
**BVW-65P BVW-75P**
**BVW-95P BVW-96P**

# SV-84P (2/2); DRUM SERVO, CTL PB AMPLIFIER

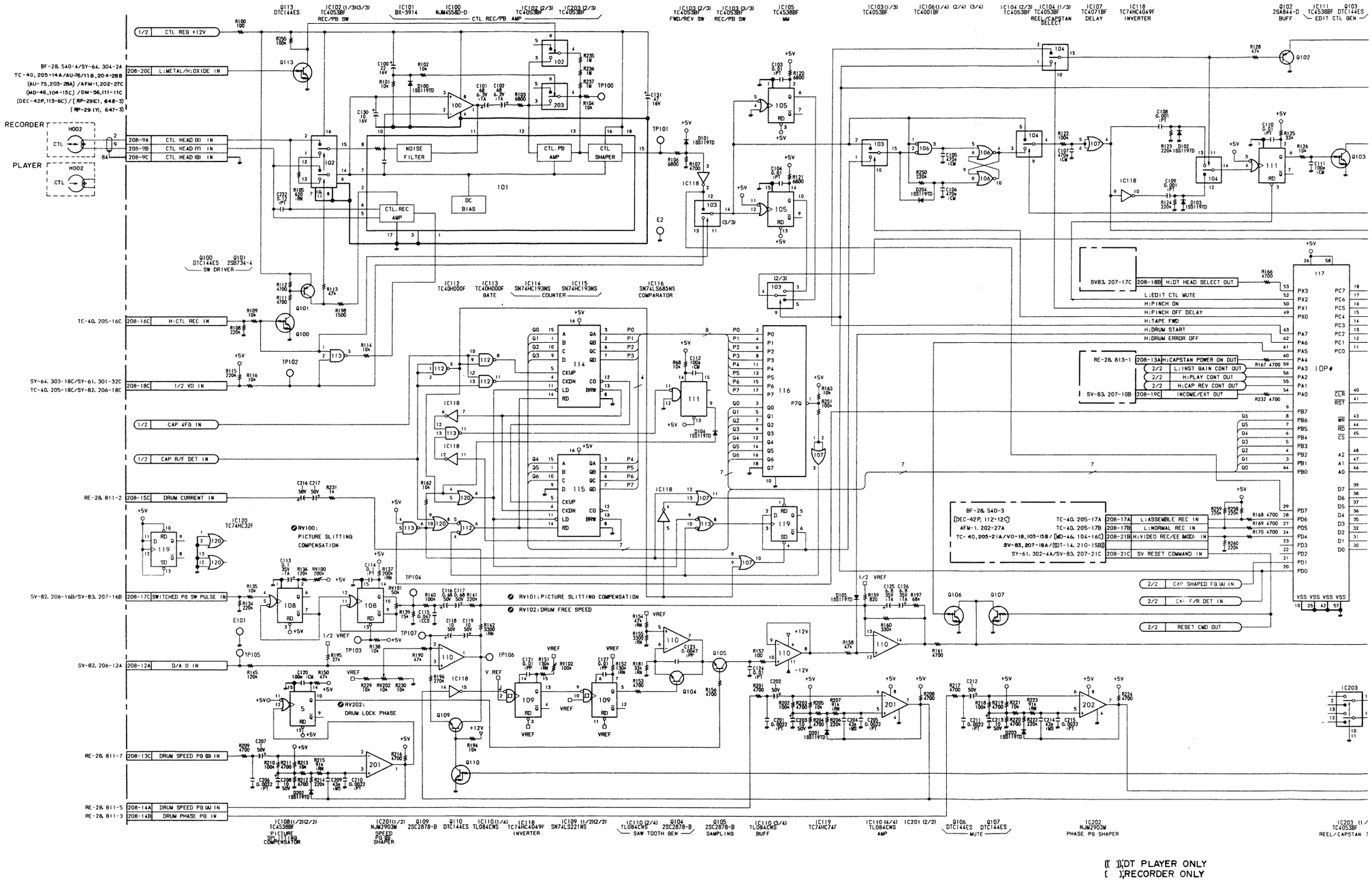

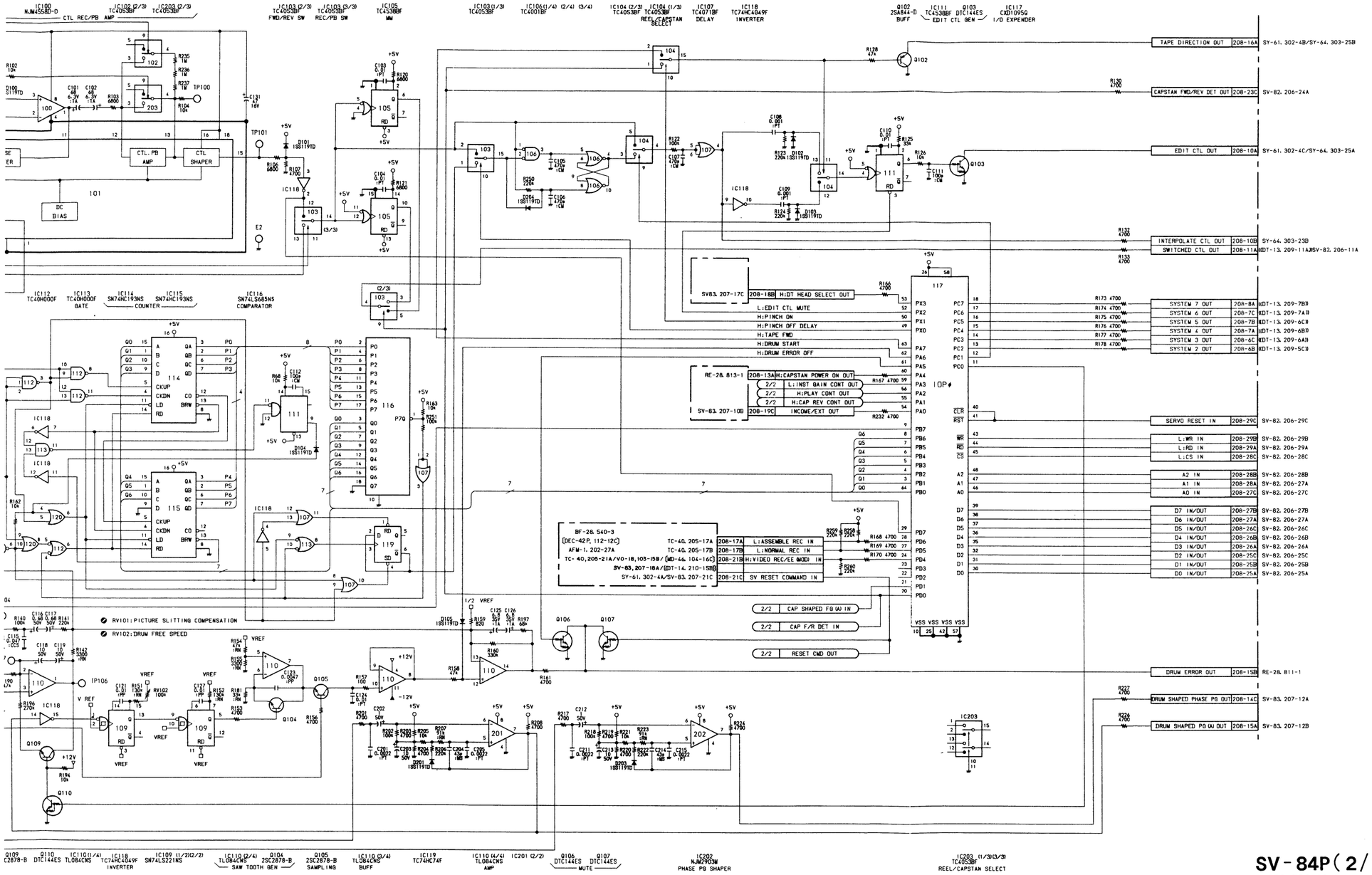


( ) : DT PLAYER ONLY
[ ] : RECORDER ONLY

**SV-84P (2/2)**
**1-622-584-13**
**BVW-60P BVW-70P**
**BVW-65P BVW-75P**
**BVW-95P BVW-96P**



E F G H I J K L

RE-28, PTC-20/21/36, DR-56

**RE-28;** DRUM/CAPSTAN MOTOR DRIVER
**PTC-20;** CASSETTE DETECTOR
**PTC-21;** REEL TABLE POSITION DETECTOR
**PTC-36;** CASSETTE DETECTOR
**DR-56;** DRUM ERROR AMPLIFIER, CAPSTAN/REEL MOTOR DRIVER

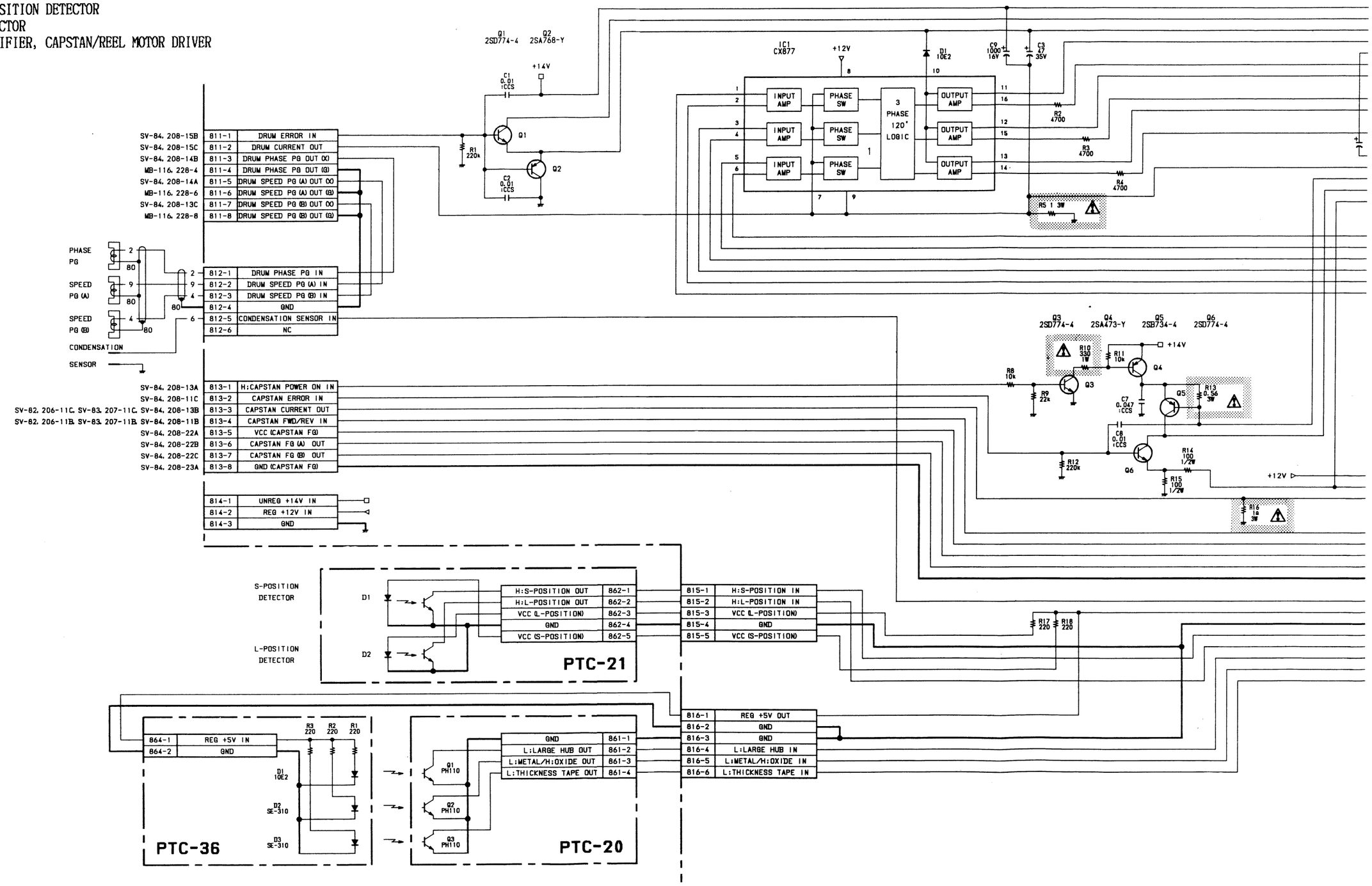

RE-28, PTC-20/21/36, DR-56

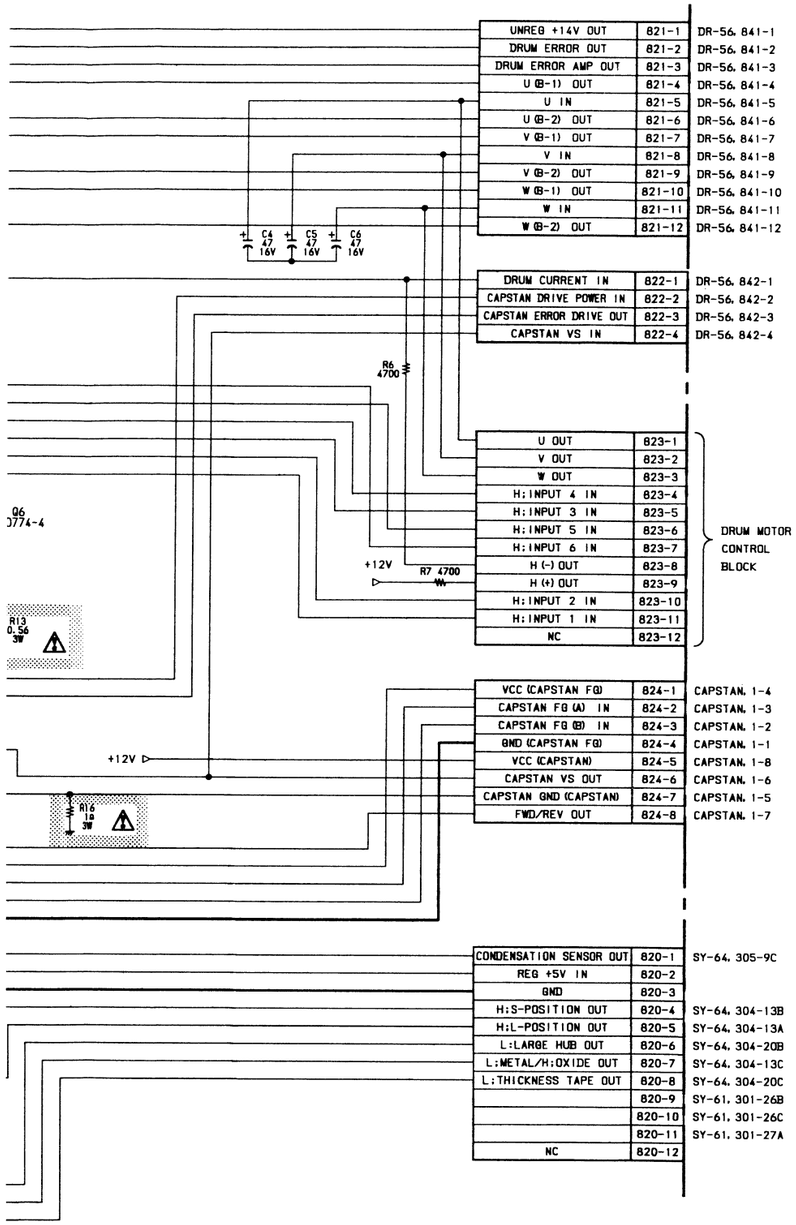


# RE-28

1-622-559-11
BVW-60P

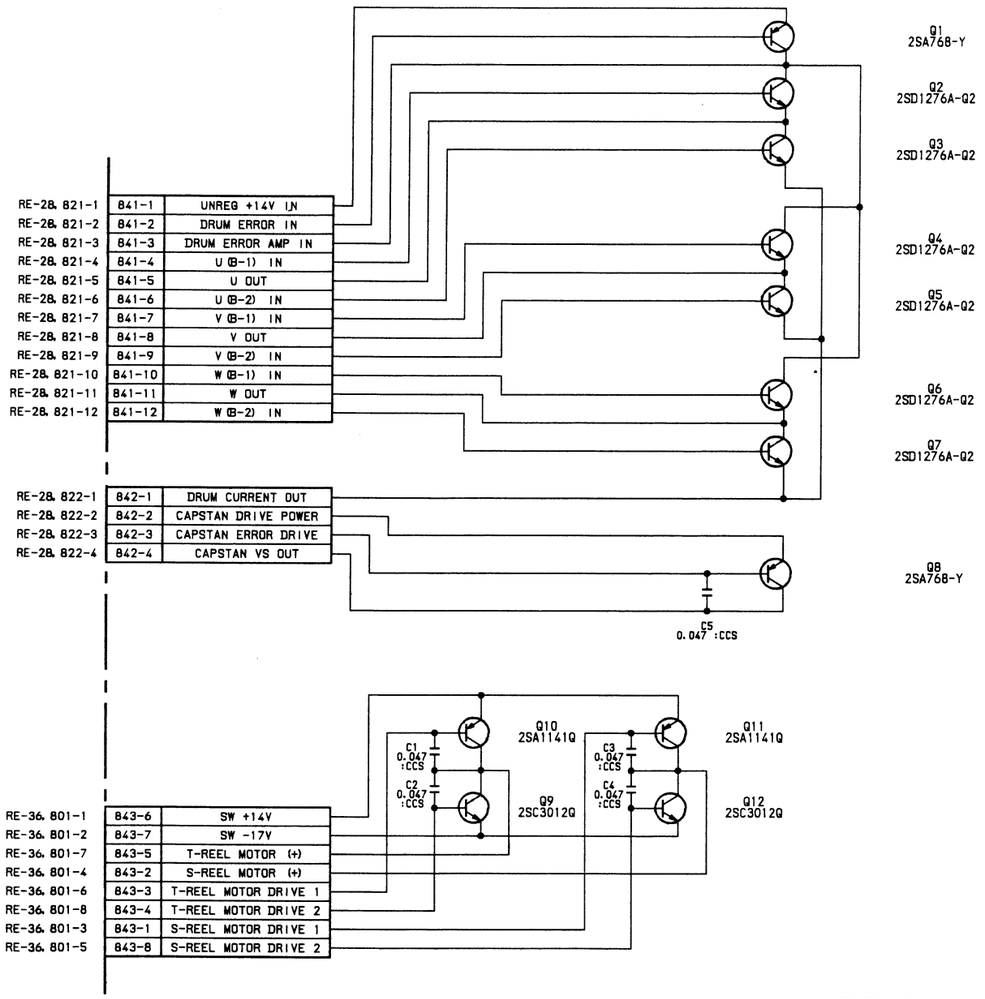


# DR-56

1-622-561-11, 12
BVW-60P

**NOTE:**

**The shaded and ⚠-marked components are critical to safety.**
**Replace only with same components as specified.**

**RE-36;** REEL MOTOR DRIVER, REEL FG AMPLIFIER
**RM-40;** REEL MOTOR
**DE-15;** REEL FG
**SE-57;** THREADING MOTOR CONTROL
**PTC-31;** THREADING MOTOR FG

NOTE

| MARK | CHANGE INFORMATION | SERIAL NO. |
|---|---|---|
| *1 | R105 5100→ 5600<br>R205 5100→ 5600<br>R113 220k ADDED<br>R213 220k ADDED | S/N 10355 ～ |
| *2 | R109 100→ 180<br>R112 100→ 180<br>R209 100→ 180<br>R212 100→ 180 | S/N 10913 ～ |

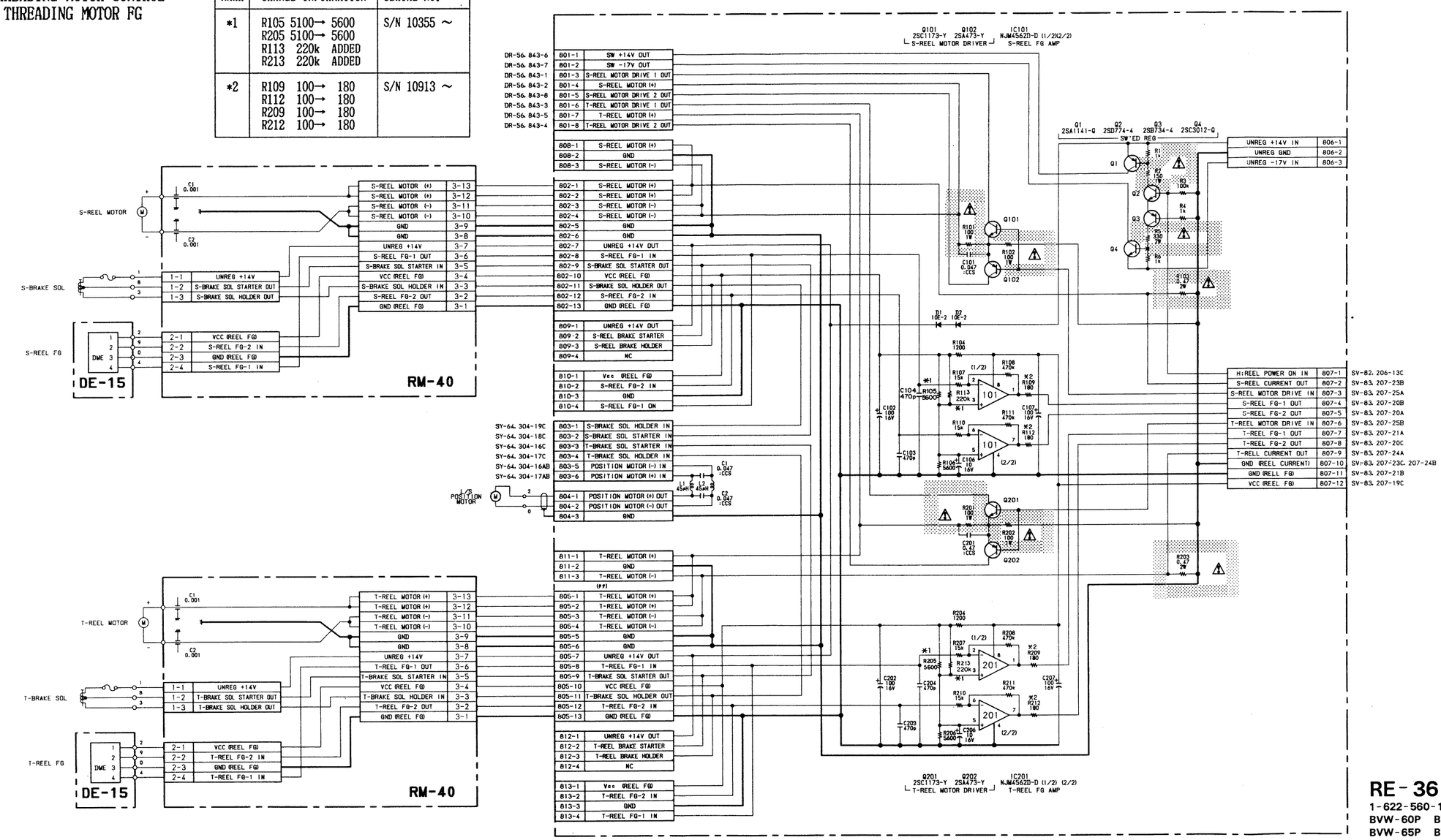


**RE-36**
1-622-560-11
BVW-60P BVW-70P
BVW-65P BVW-75P

**NOTE:**

**The shaded and ⚠-marked components are critical to safety.**
**Replace only with same components as specified.**

RE-36, RM-40, DE-15, SE-57, PTC-31

NOTE

| MARK | CHANGE INFORMATION | SERIAL NO. |
|---|---|---|
| *1 | C3 0.047 → 0.0056<br>R11 100k → 91k | S/N 11083 ～ |

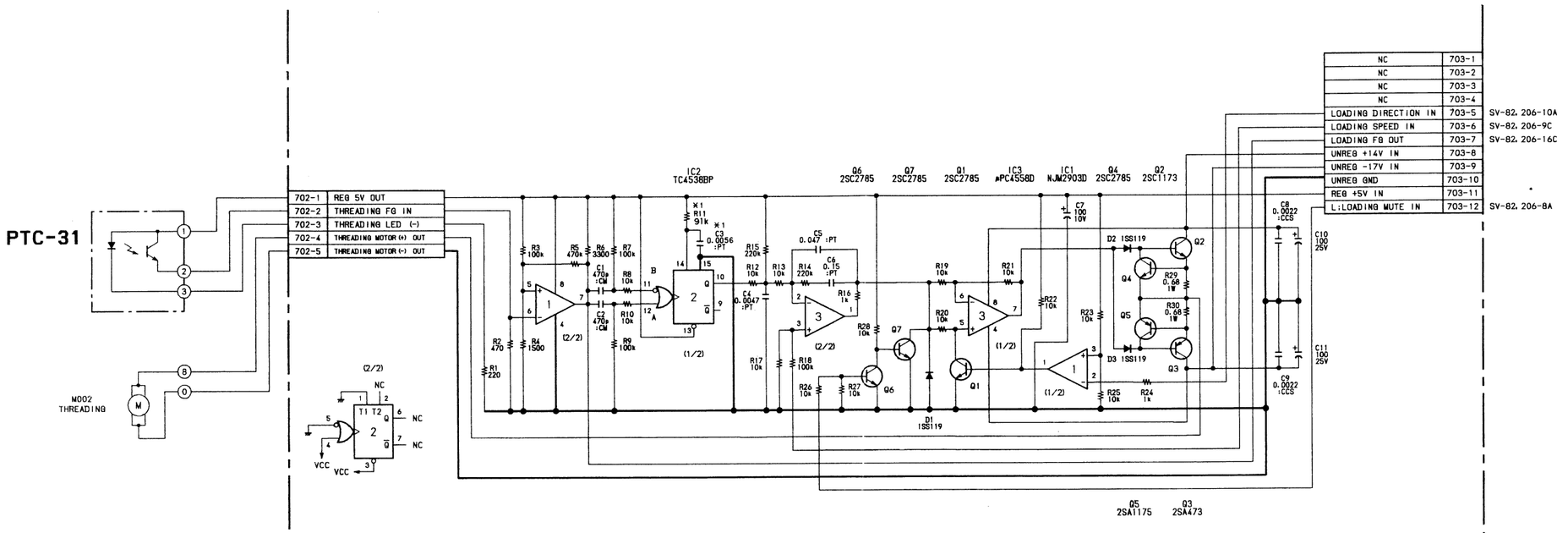


**SE-57**
1-622-562-12
BVW-60P BVW-70P
BVW-65P BVW-75P
BVW-95P BVW-96P

to

# SY-61A (1/3); SYSTEM CONTROL, CPU-1

NOTE

| MARK | CHANGE INFORMATION | SERIAL NO. |
|---|---|---|
| *1 | C112 13pF → 33pF | S/N 10538 ~ |

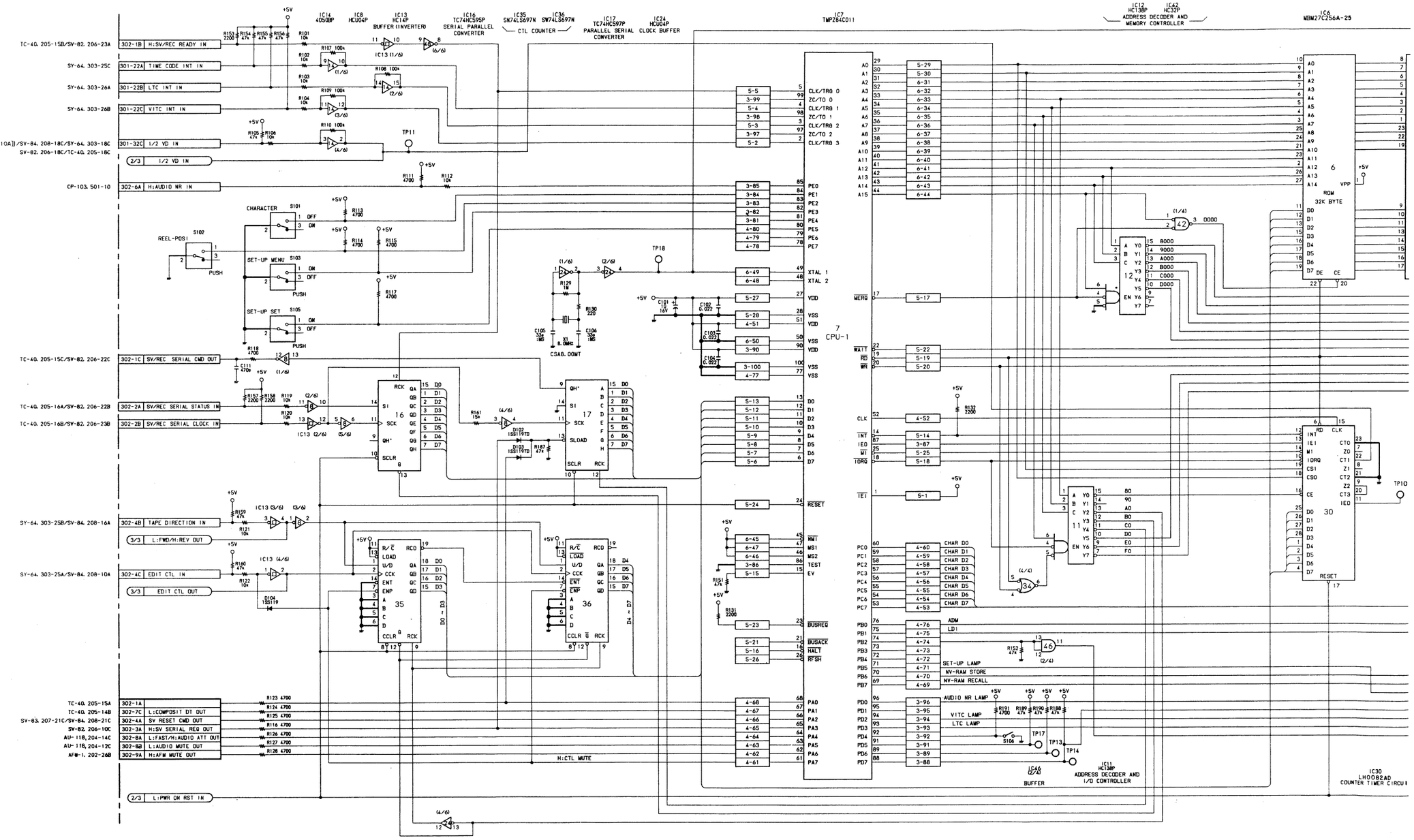

IC6 WBM27C256A-25 — IC5 CXK5816PN-12L — IC4 WBM-2212 — IC43 IC44 IC34 HC32P HC00P HC08P MODE CONTROLLER — IC29 IC28 HC245P HC245P DATA BUS TRANSCEIVER — IC23 CXK5816PN-12L ADDRESS SELECTOR AND DECODER — IC21 IC22 TC74HC157P TC74HC157P — IC10 HC11P DATA MODE CONTROLLER — IC1 74LS244N DATA OUTPUT BUFFER — IC53 TC74HC02P — IC2 74LS245N G DIR DATA BUS TRANSCEIVER — IC3 74LS244N ADDRESS BUFFER

SYS CLOCK 8MHz OUT 2/3

ROM 32K BYTE — RAM 2K BYTE — NV-RAM 256 BYTE

CPU1 A0 CPU1 A1 CPU1 A2 CPU1 A3 CPU1 A4 CPU1 A5 CPU1 A6 CPU1 A7

CPU1 D0 CPU1 D1 CPU1 D2 CPU1 D3 CPU1 D4 CPU1 D5 CPU1 D6 CPU1 D7

CPU2 D0 CPU2 D1 CPU2 D2 CPU2 D3 CPU2 D4 CPU2 D5 CPU2 D6 CPU2 D7

H:A → B L:B → A

CPU1 WAIT　CPU1 RD　CPU2 WR　CPU2 WAIT　CS 2

H:CPU1　H:CPU2

SELECT STB

H:B CPU2 L:A CPU1

B000 C000 D000 D0 E0 F0

| | | |
|---|---|---|
| L:CS TC0 OUT | 302-23C | SY-64. 304-23C |
| L:CS LTC READER OUT | 302-22C | SY-64. 304-22C |
| L:CS VITC READER OUT | 302-21C | SY-64. 304-21C |
| L:RD OUT | 302-27C | SY-64. 304-27C |
| L:WR OUT | 302-28C | SY-64. 304-28C |
| L:CS MECH I/O OUT | 302-24C | SY-64. 304-24C |
| L:CS TC I/O OUT | 302-25C | SY-64. 304-25C |
| L:CS VIDEO I/O OUT | 302-26C | SY-64. 304-26C |
| DATA BUS 0 IN/OUT | 302-28A | SY-64. 304-28A |
| DATA BUS 1 IN/OUT | 302-27A | SY-64. 304-27A |
| DATA BUS 2 IN/OUT | 302-26A | SY-64. 304-26A |
| DATA BUS 3 IN/OUT | 302-25A | SY-64. 304-25A |
| DATA BUS 4 IN/OUT | 302-24A | SY-64. 304-24A |
| DATA BUS 5 IN/OUT | 302-23A | SY-64. 304-23A |
| DATA BUS 6 IN/OUT | 302-22A | SY-64. 304-22A |
| DATA BUS 7 IN/OUT | 302-21A | SY-64. 304-21A |
| ADDRESS BUS 0 OUT | 302-28B | SY-64. 304 28B |
| ADDRESS BUS 1 OUT | 302-27B | SY-64. 304-27B |
| ADDRESS BUS 2 OUT | 302-26B | SY-64. 304-26B |
| ADDRESS BUS 3 OUT | 302-25B | SY-64. 304-25B |
| ADDRESS BUS 4 OUT | 302-24B | SY-64. 304-24B |
| CPU2 D0 I/O | 2/3 | |
| CPU2 D1 I/O | 2/3 | |
| CPU2 D2 I/O | 2/3 | |
| CPU2 D3 I/O | 2/3 | |
| CPU2 D4 I/O | 2/3 | |
| CPU2 D5 I/O | 2/3 | |
| CPU2 D6 I/O | 2/3 | |
| CPU2 D7 I/O | 2/3 | |
| CPU2 A0 IN | 2/3 | |
| CPU2 A1 IN | 2/3 | |
| CPU2 A2 IN | 2/3 | |
| CPU2 A3 IN | 2/3 | |
| CPU2 A4 IN | 2/3 | |
| CPU2 A5 IN | 2/3 | |
| CPU2 A6 IN | 2/3 | |
| CPU2 A7 IN | 2/3 | |
| TEST 1 | 2/3 | |
| L:CPU2 RD IN | 2/3 | |
| L:CPU2 WR IN | 2/3 | |
| L:CPU2 WAIT OUT | 2/3 | |
| L:CPU2 IFCS IN | 2/3 | |
| H:AUTO OFF LAMP | 3/3 | |
| CHARACTER SIG OUT | 302-12A | VD-18, 103-17B |
| CHARACTER GATE OUT | 302-12B | VD-18, 103-17A |
| REF VD IN | 302-11A | SY-64. 303-19A/TBC-9. 101-21B/TBC-8/12, 106-11A |
| REF HD IN | 302-11B | TBC-9. 101-20A |
| UNREG +9V IN | 301-4A | |
| UNREG +9V IN | 301-4B | |
| UNREG +9V IN | 301-4C | |
| L:AUDIO NR LAMP OUT | 302-6B | SW-144. 511-4 |
| L:AUTO OFF LAMP OUT | 302-7B | SW-144. 511-1 |
| L:VITC LAMP OUT | 302-6C | SW-144. 511-2 |
| L:LTC LAMP OUT | 302-7A | SW-144. 511-3 |
| L:AUDIO NR ON OUT | 302-8C | AU-118, 204-8B |
| L:EXP RESET OUT | 302-21B | SY-64. 304-21B |

CHARA D0 CHARA D1 CHARA D2 CHARA D3 CHARA D4 CHARA D5 CHARA D6 CHARA D7

IC15 TC4053BFHB

IC19 MB88303 TV DISPLAY CONTROLLER

IC18 TA78L005P

IC14 BUFFER

IC30 LH0082AD COUNTER TIMER CIRCUIT

CV101: CHARACTER SIZE

CV102: CHARACTER SIZE

IC53 TC74HC02P

IC48 TC4069UBP

IC24 (5/6) IC9 MS4529AP LED DRIVER — IC8 HCU04P BUFFER

D101 LN25RP SET UP

(( )) ; DT PLAYER ONLY

**SY-61A(1/3)**
**1-622-577-14**
**BVW-60P**
**BVW-65P**

# SY-61A (2/3); SYSTEM CONTROL, CPU-2 SERIAL INTERFACE
# SY-61A (3/3); SYSTEM CONTROL, PARALLEL INTERFACE

NOTE

| MARK | CHANGE INFORMATION | SERIAL NO. |
|---|---|---|
| *1 | R247 4700→0.01 | S/N 10456 ～ |
| | R247 0.01 DELETED | S/N 10538 ～ |
| *2 | IC39 MBM27C256-25<br>→MBM27C512-25<br>32k →64k<br>VPP →A15<br>JR201 ADDED | |

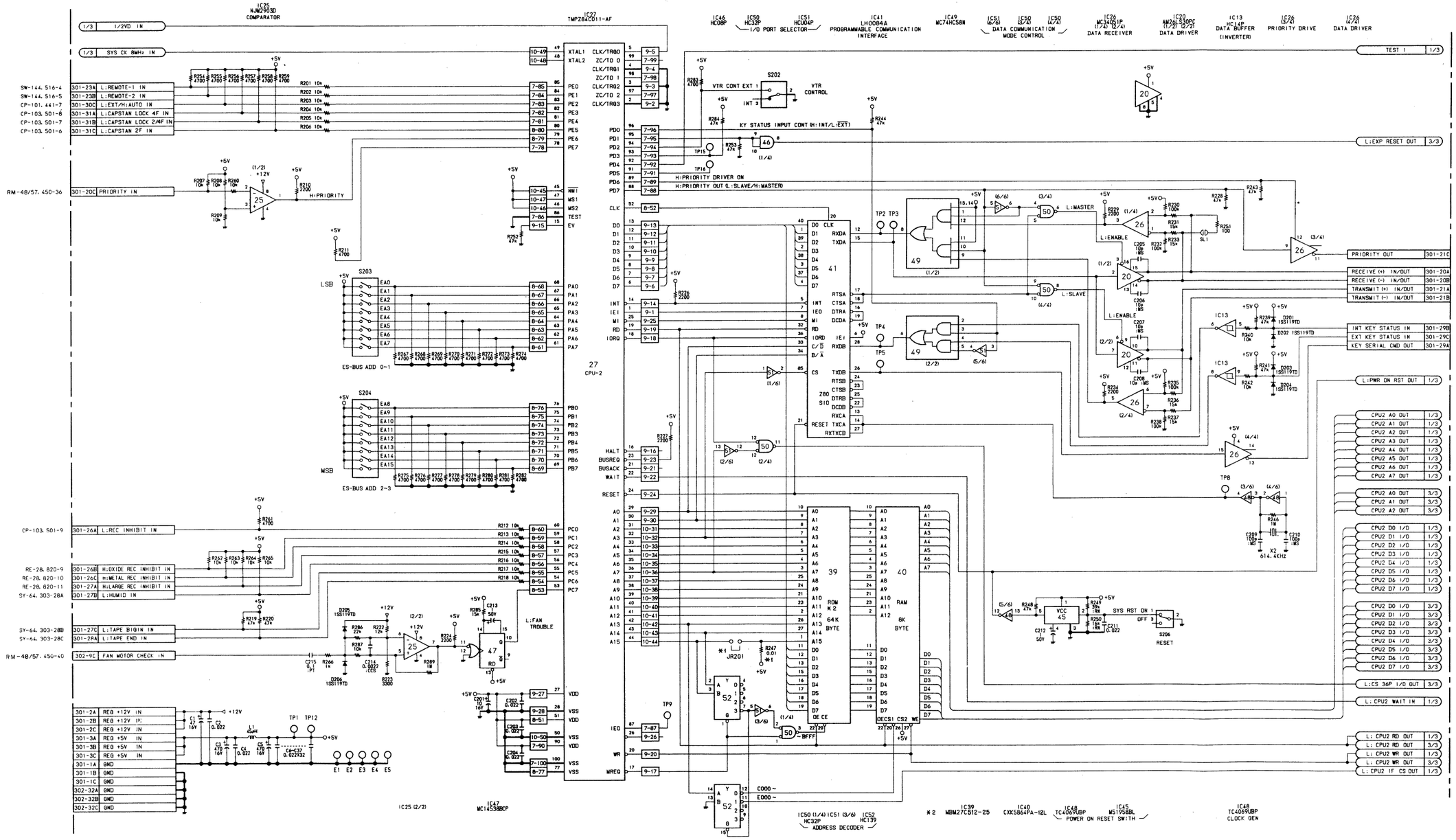




SY-61A(2/3)
1-622-577-14
BVW-60P
BVW-65P

SY-61A(2/3), (3/3)

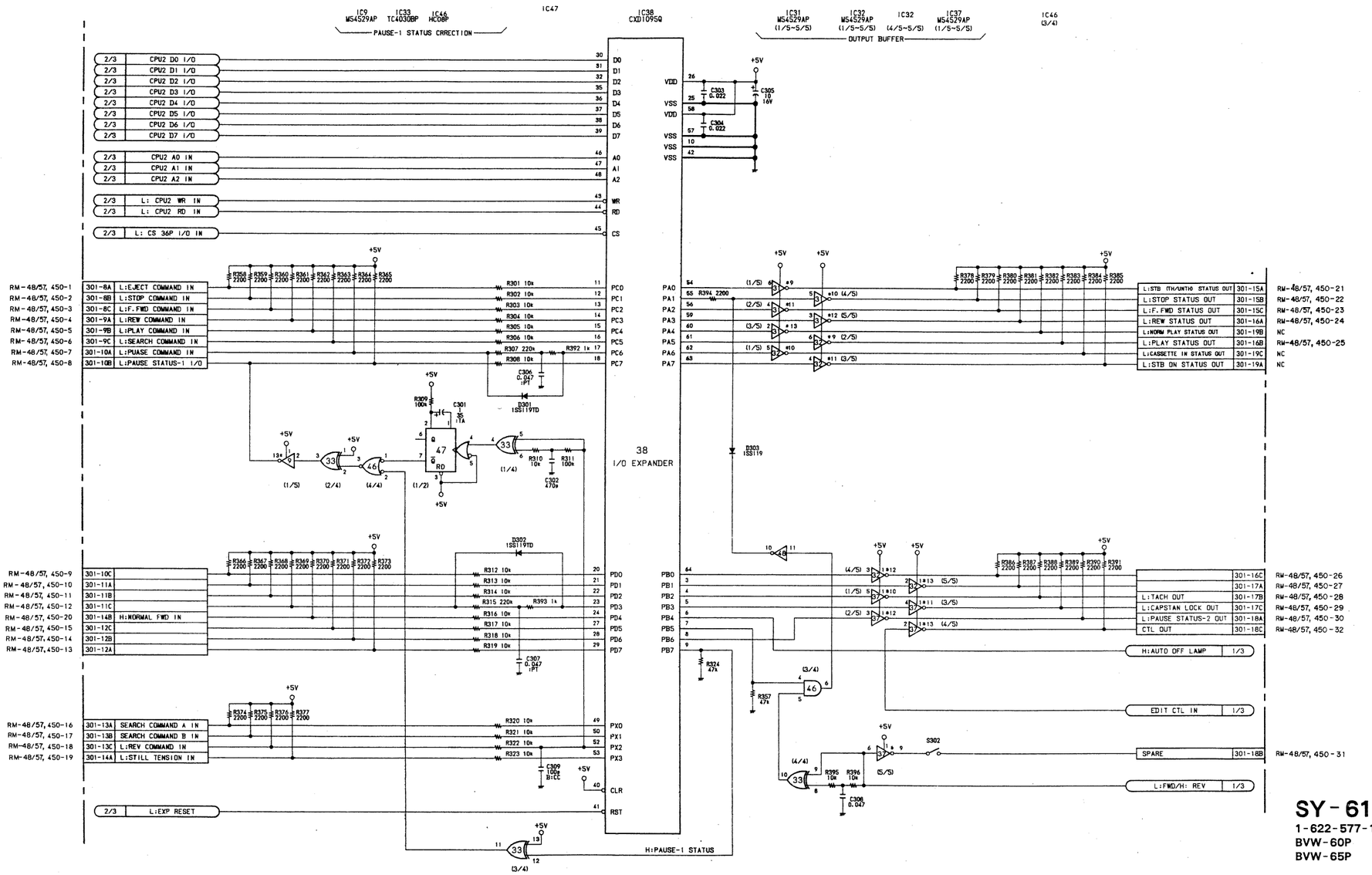


## SY-61A(3/3)
1-622-577-14
BVW-60P
BVW-65P

## SY-61A(2/3)
1-622-577-14
BVW-60P
BVW-65P



I J K L M N O P

# SY-64AP (1/5); I/O EXPANDER

NOTE

| MARK | CHANGE INFORMATION | SERIAL NO. |
|---|---|---|
| *1 | E3 DELETED | S/N 10713 ~ |
| *2 | DELETED<br>TP1~5<br>E1 | S/N 10928 ~ |

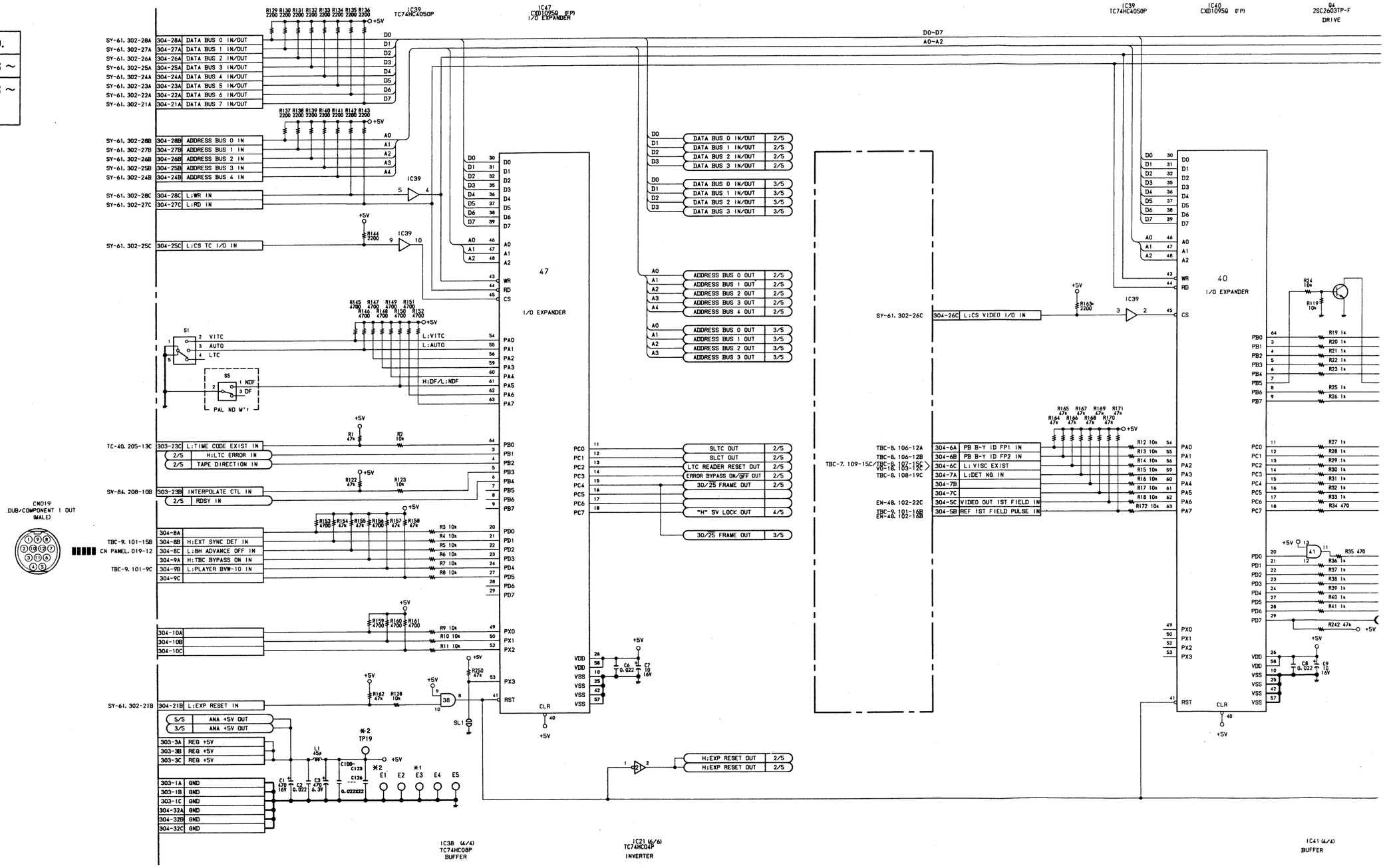

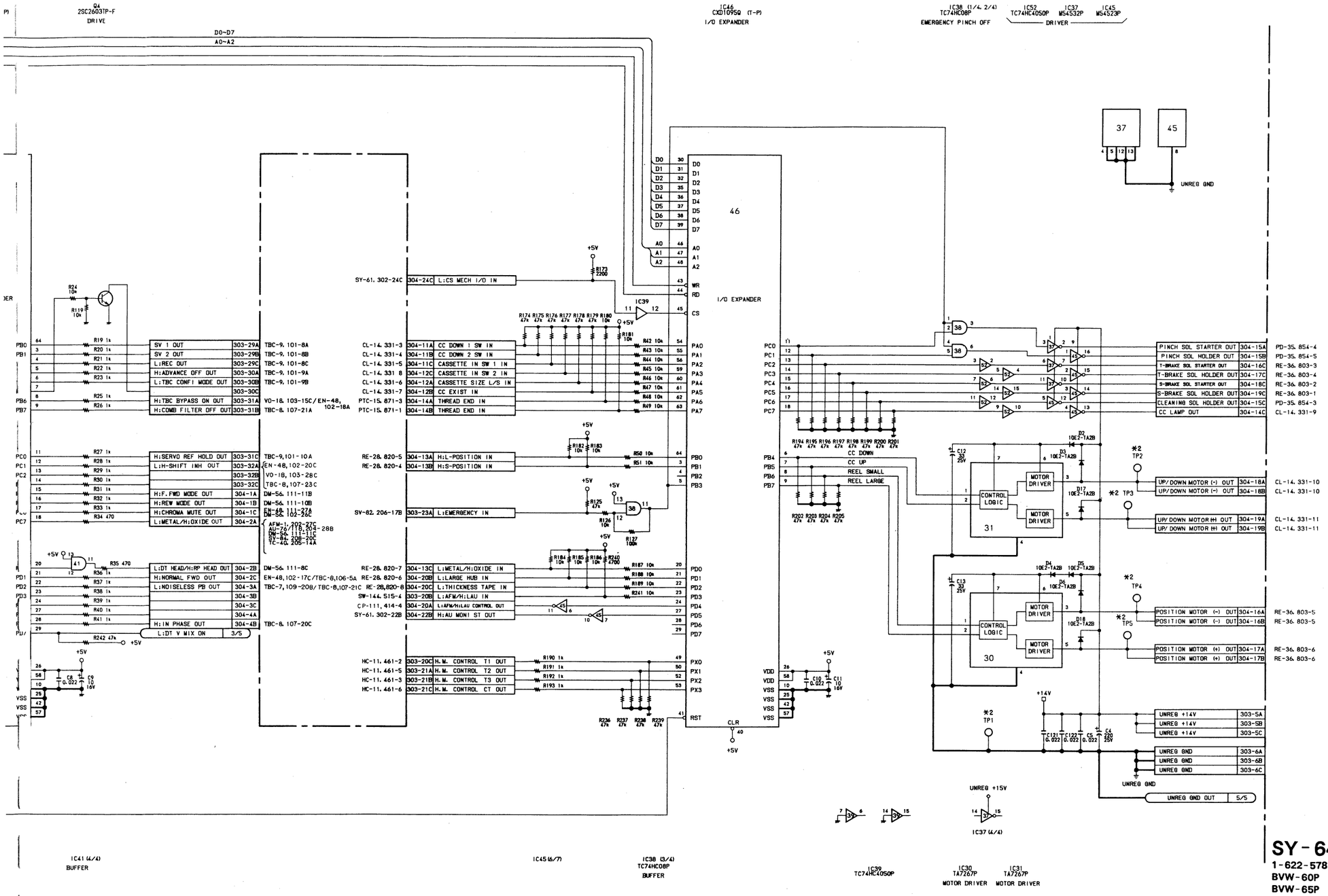


# SY-64AP (1/5)

**1-622-578-21**
**BVW-60P**
**BVW-65P**

SY-64AP (2/5) SY-64

# SY-64AP (2/5) ; LTC READER

NOTE

| MARK | CHANGE INFORMATION | SERIAL NO. |
|---|---|---|
| *1 | DELETED<br>TP10 ~ TP12 | S/N 10928 ~ |

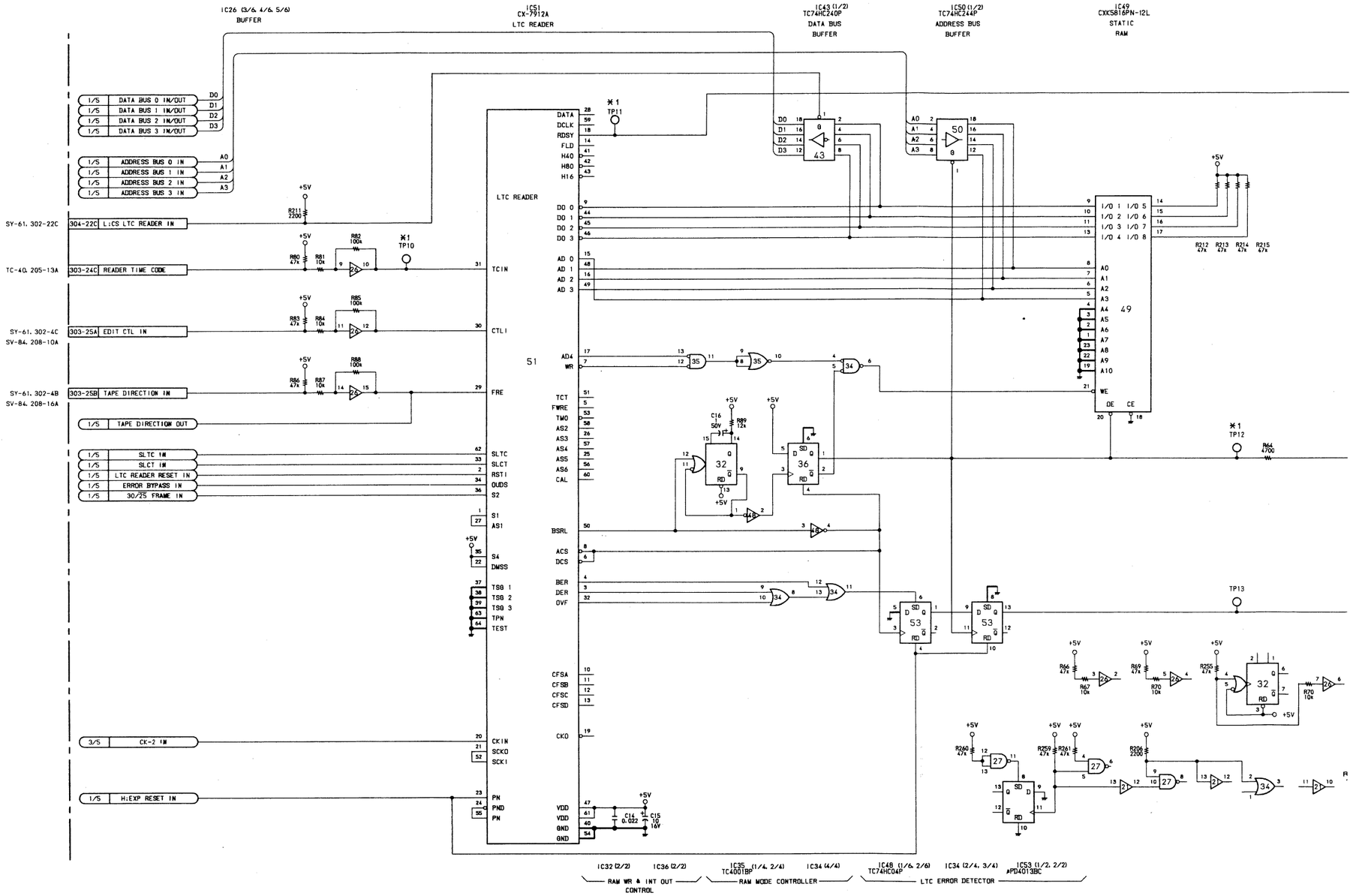

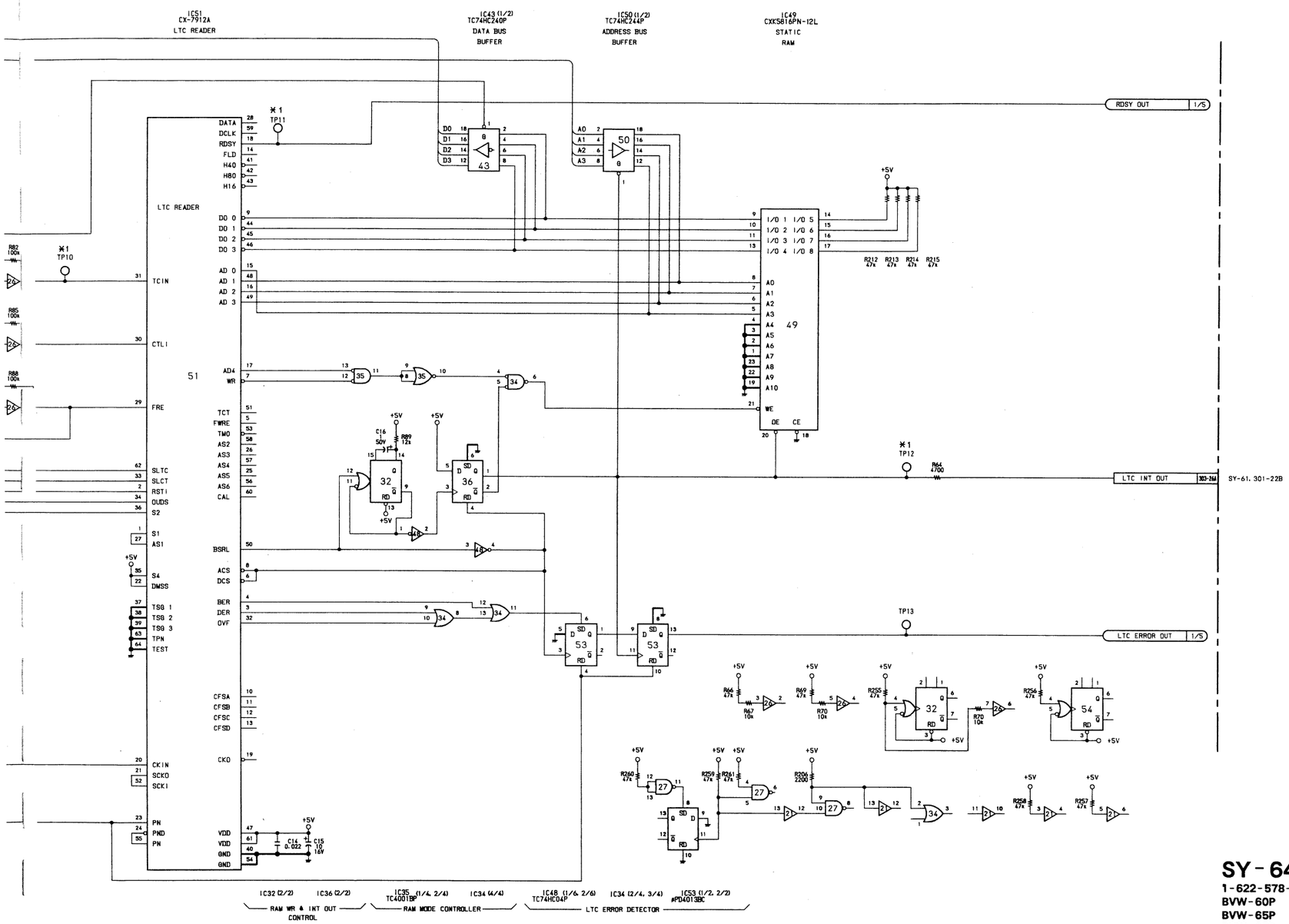


## SY-64AP(2/5)

**1-622-578-21**
**BVW-60P**
**BVW-65P**
**BVW-95P**

SY-64AP (3/5) SY-64AP

# SY-64AP (3/5) ; VITC READER

NOTE

| MARK | CHANGE INFORMATION | SERIAL NO. |
|---|---|---|
| *1 | R245 62k → 75k | S/N 10803 ～ |
| *2 | TP17 DELETED | S/N 10928 ～ |

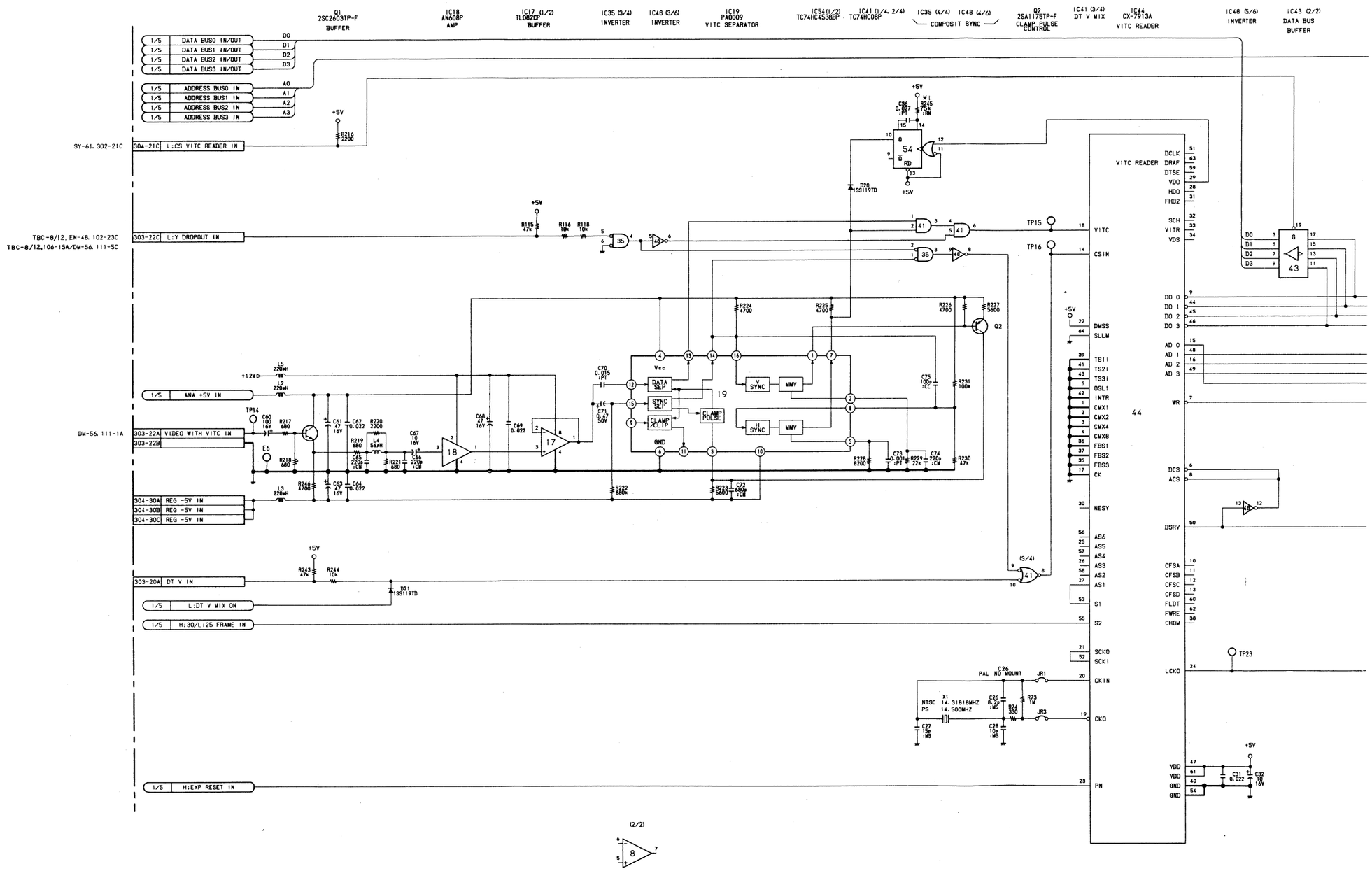

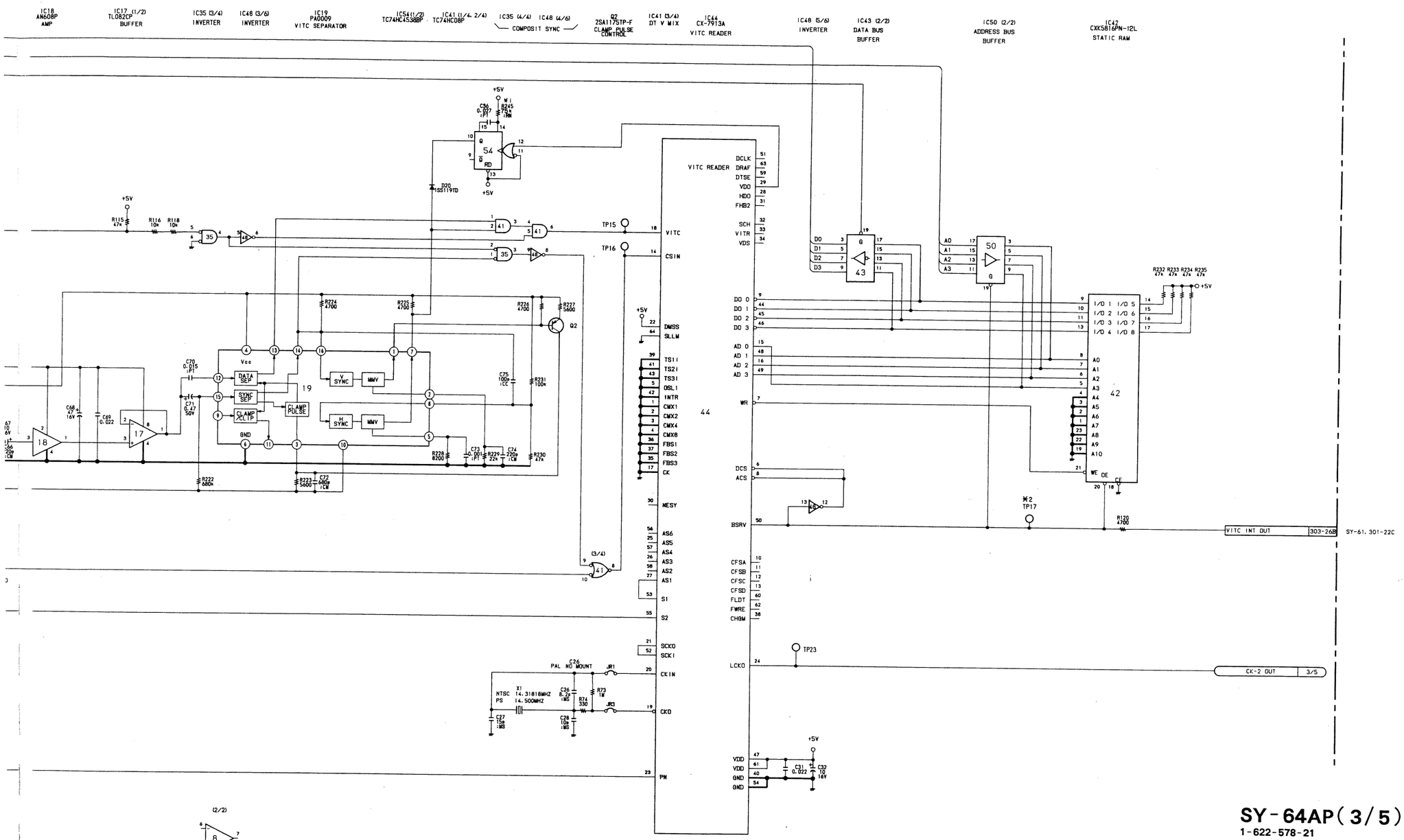


# SY-64AP(3/5)

**1-622-578-21**
**BVW-60P**
**BVW-65P**
**BVW-95P**

# SY-64AP (4/5); TIME BASE IMPACT ERROR CORRECTOR
# SY-64AP (5/5); SENSOR AMPLIFIER

NOTE

| MARK | CHANGE INFORMATION | SERIAL NO. |
|---|---|---|
| *1 | DELETED<br>Q302, Q303, Q304, Q305<br>TP301, TP302, TP309, TP310<br>TP401, E401<br>R344　1k → 6200<br>RV303　100k → R364 43k<br>RV304　100k → R363 22k<br>RV305　100k → R365 56k<br>RV399　100k → R366 13k<br>S301 → R361 2.2<br>S302 → R362 2.2 | S/N 10928 ～ |

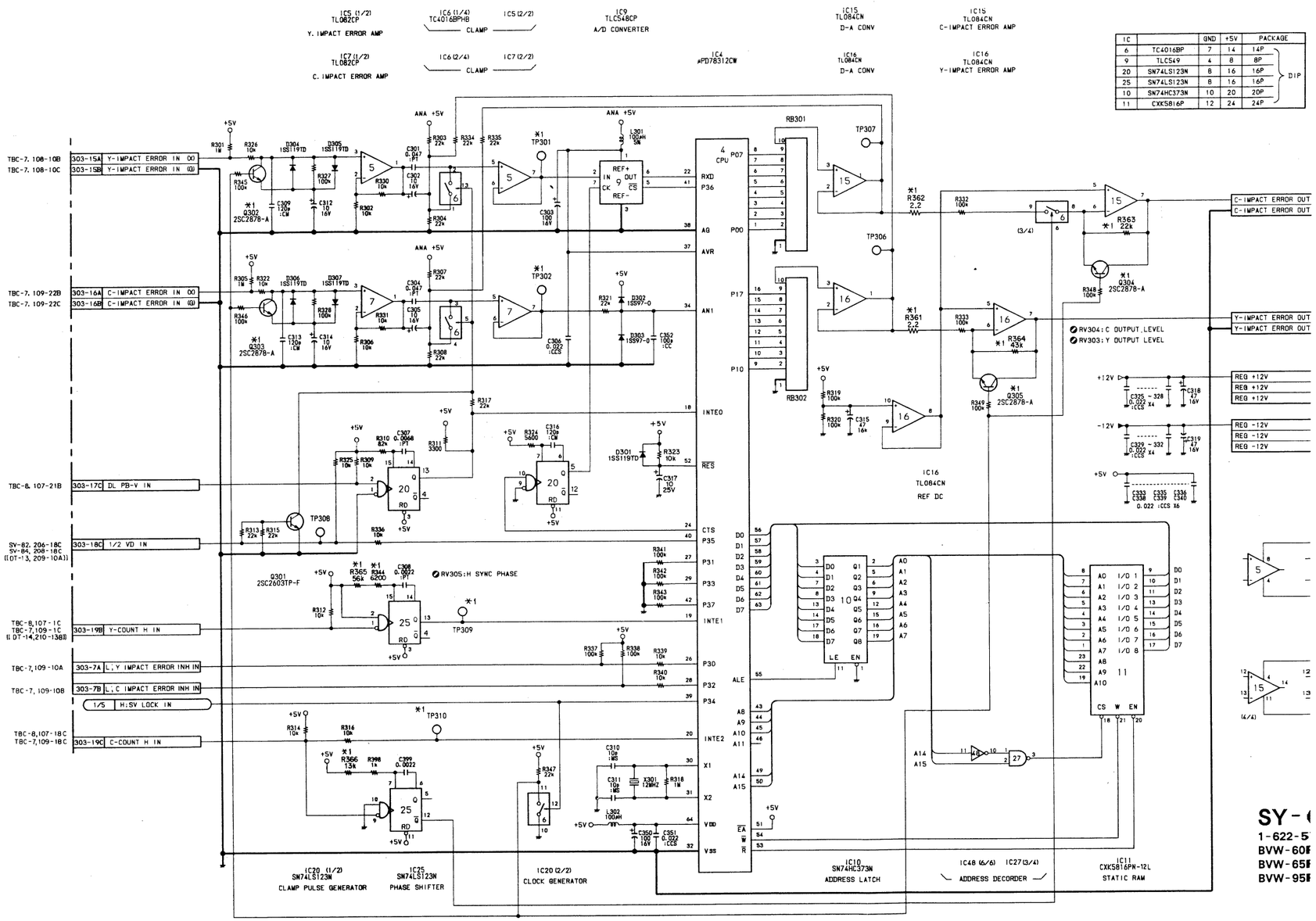

| | GND | +5V | PACKAGE |
|---|---|---|---|
| TC40 | 7 | 14 | 14P |
| TLC | 4 | 8 | 8P |
| 74L N | 8 | 16 | 16P |
| 74L N | 8 | 16 | 16P |
| 74HC373N | 10 | 20 | 20P |
| CXK5816P | 12 | 24 | 24P |

DIP

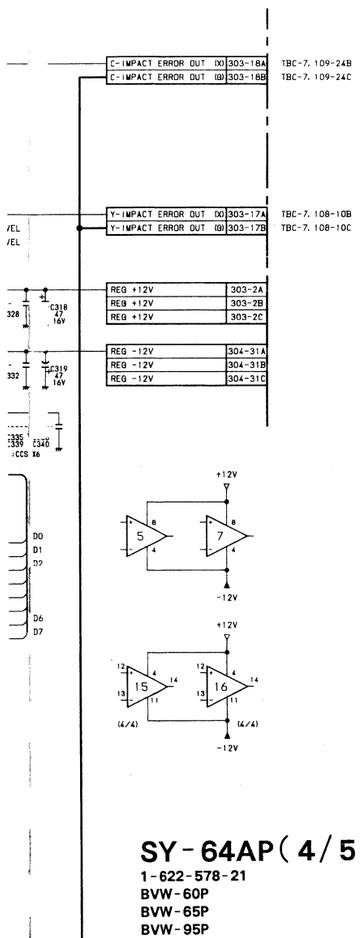


## SY-64AP(4/5)

**1-622-578-21**
**BVW-60P**
**BVW-65P**
**BVW-95P**

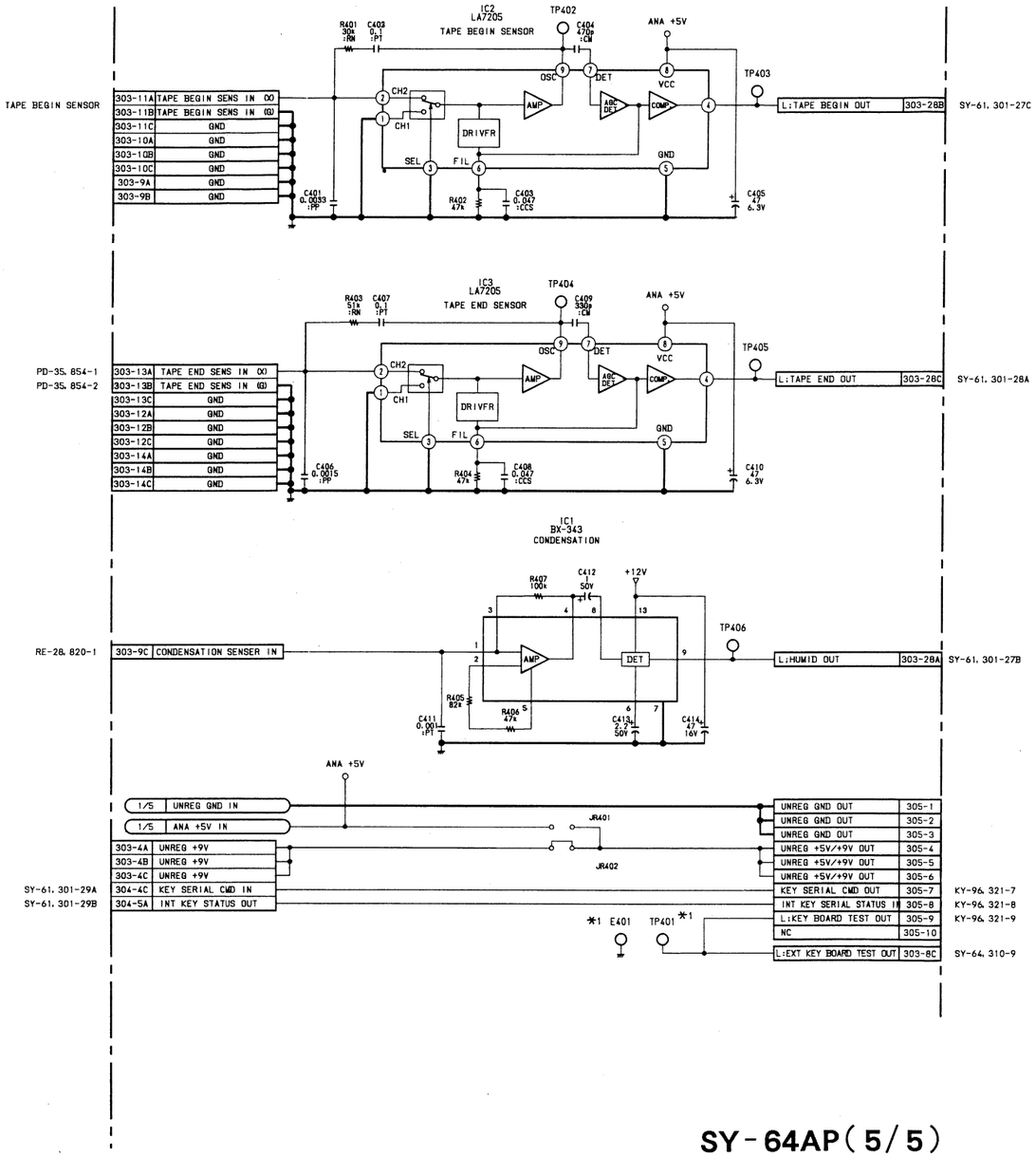


## SY-64AP(5/5)

**1-622-578-21**
**BVW-60P**
**BVW-65P**
**BVW-95P**

**PD-35 ; PINCH/CLEANING SOLENOID**
**PTC-15 ; THREAD/UNTHREAD END SENSOR**
**RM-57 ; REMOTE CONNECTOR**

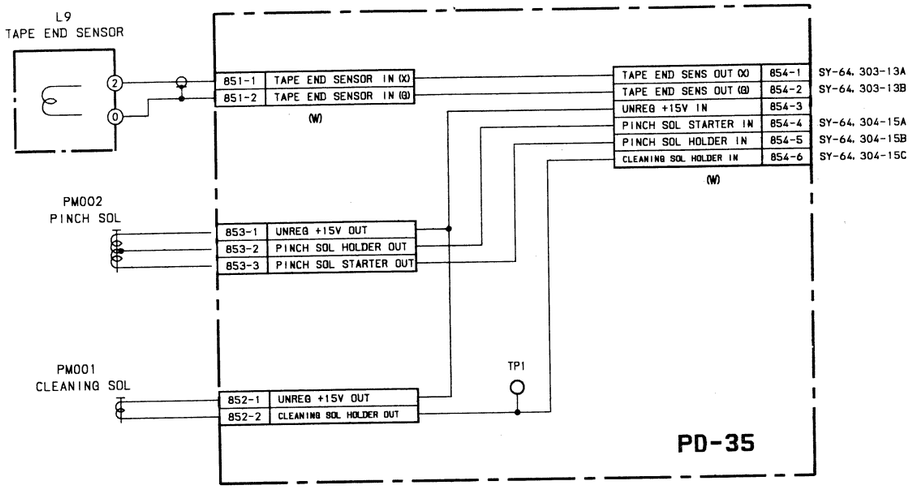


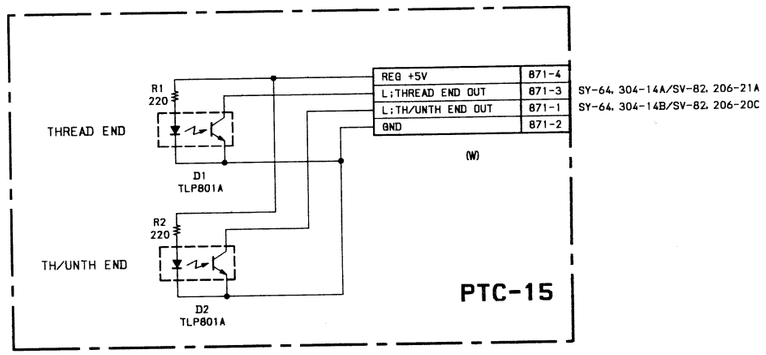


**PD-35**
1-622-596-11
BVW-60P BVW-75P
BVW-65P BVW-95P
BVW-70P BVW-96P

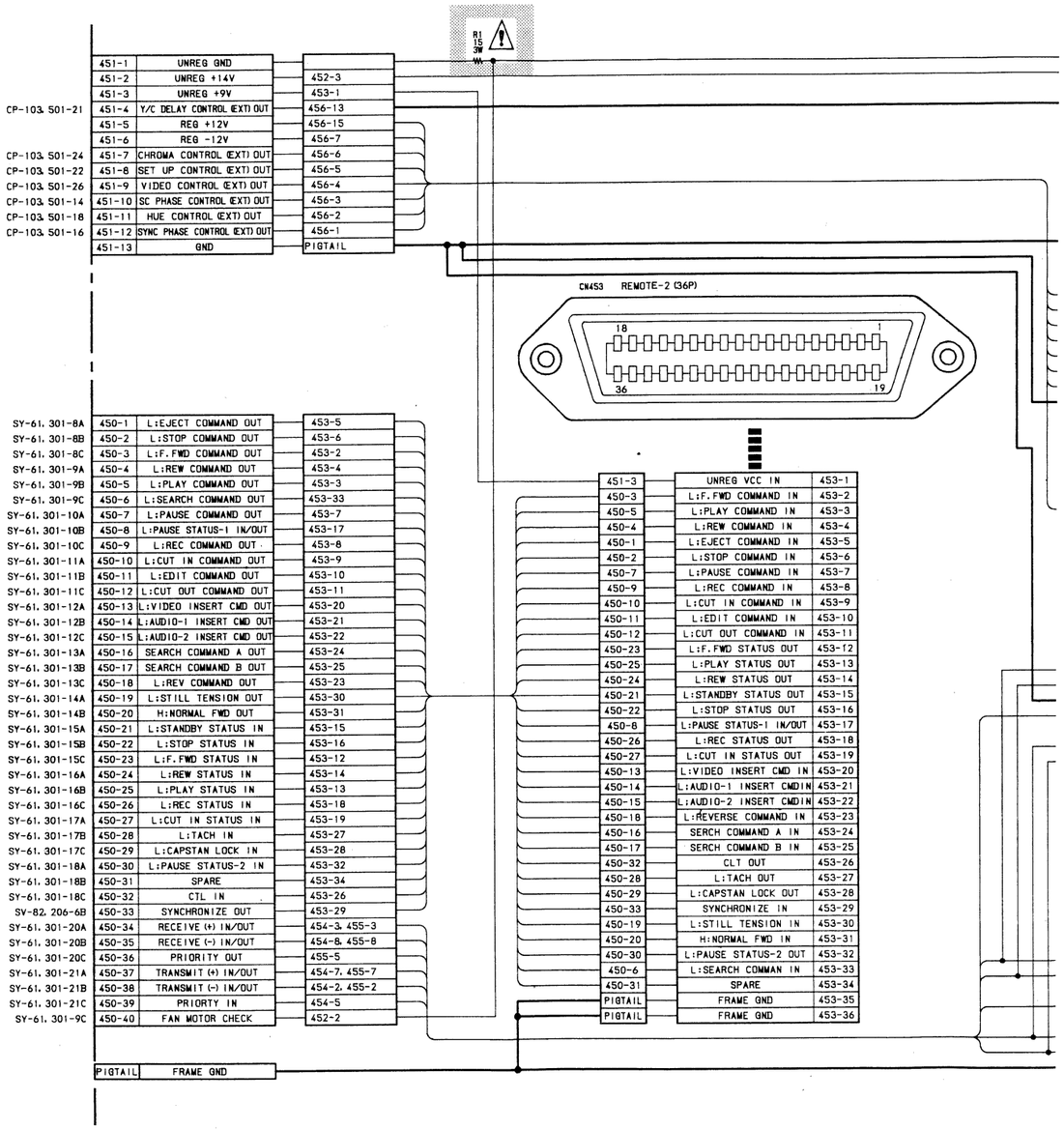


**NOTE:**

**The shaded and ⚠-r**
**safety.**
**Replace only with sa**

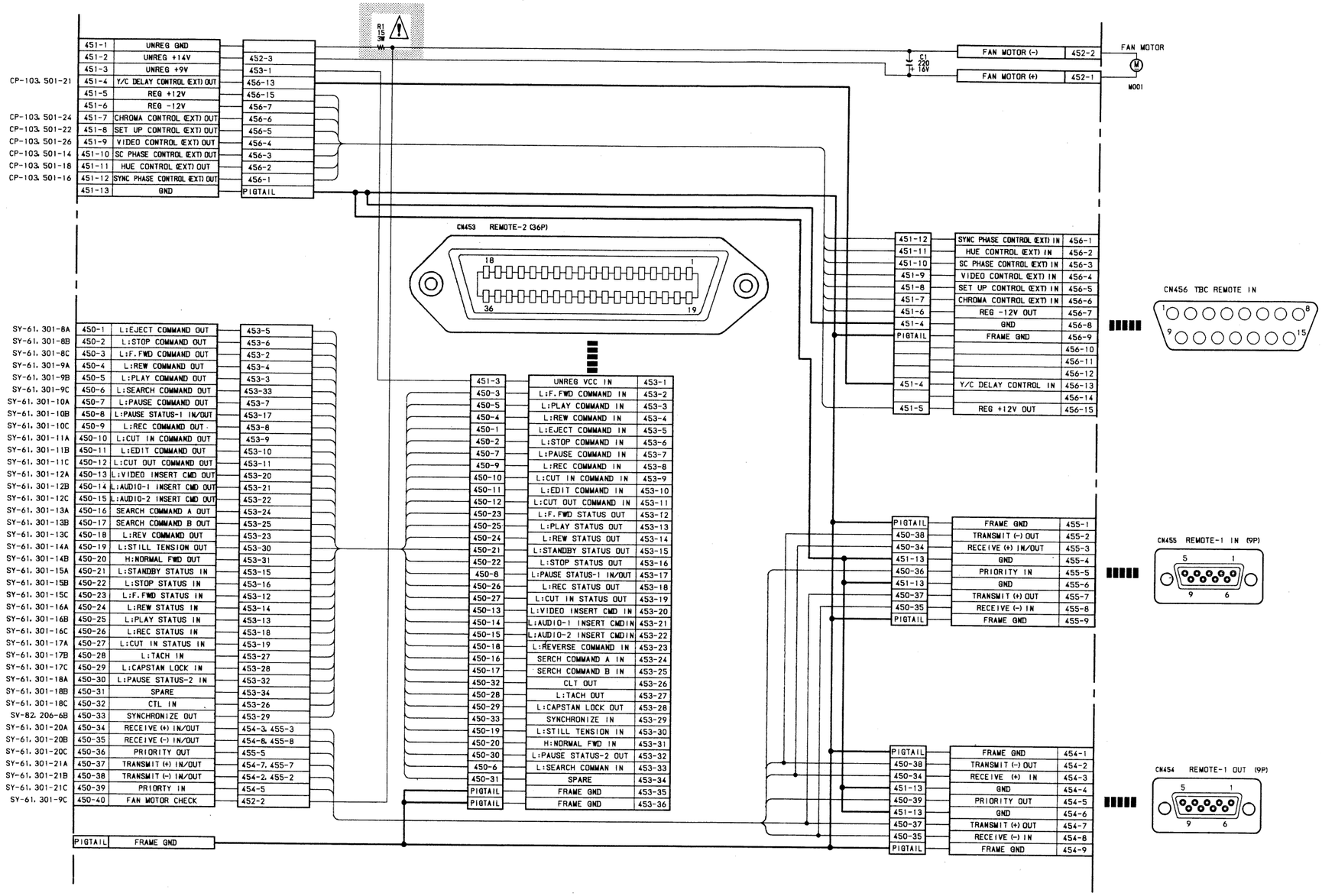


**NOTE:**

**The shaded and ⚠-marked components are critical to safety.**
**Replace only with same components as specified.**

# RM-57

**1-624-153-11, 12, 13**
**BVW-60P BVW-70P**
**BVW-65P BVW-75P**
**BVW-95P BVW-96P**

CL-14/24, PC-32/33/41/47, CCM-2, HC-11 CL-14,

**CL-14;** CASSETTE-UP COMPARTMENT
**CL-24;** CASSETTE-UP COMPARTMENT LED
**PC-32/47;** LARGE/SMALL CASSETTE DETECTOR
**PC-33;** CASSETTE DOWN DETECTOR
**PC-41;** CASSETTE IN DETECTOR
**CCM-2;** UP/DOWN MOTOR
**HC-11;** HOURS METER

NOTE

| MARK | CHANGE INFORMATION | SERIAL NO. |
|---|---|---|
| *1 | PC-32 → PC-47 | S/N 10171 ～ |
| *2 | DELETED<br>PL001, PL002, PL003<br>ADDED<br>CL-24, R1, R2, R3, D1-6<br>TLY256 | S/N 11083 ～ |

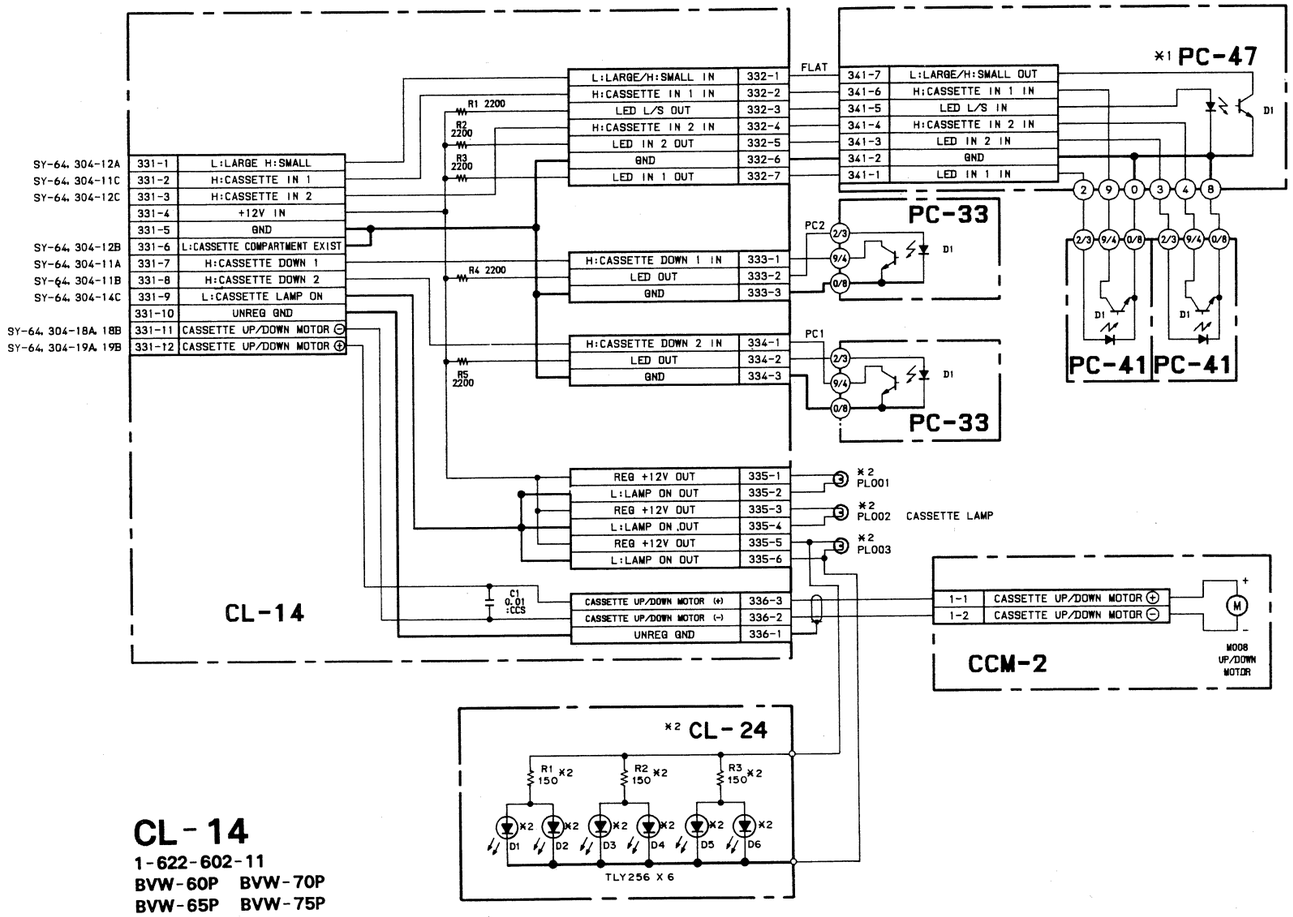


**CL-14**
**1-622-602-11**
**BVW-60P BVW-70P**
**BVW-65P BVW-75P**

SY-64, 303-20C
SY-64, 303-21A

SY-64, 303-21B
SY-64, 303-21C

CL-14/24, PC-32/33/41/47, CCM-2, HC-11

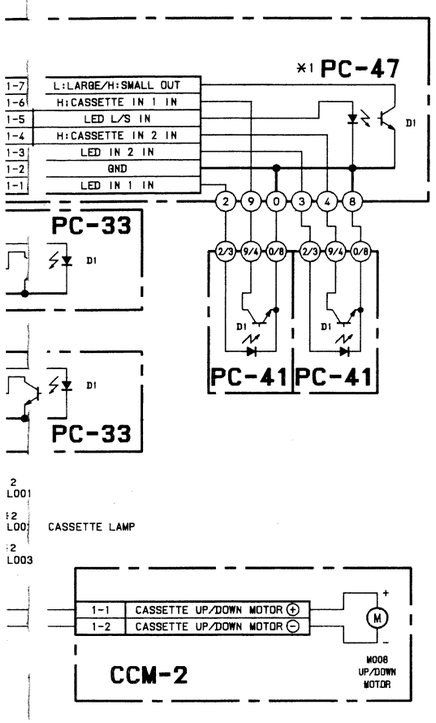


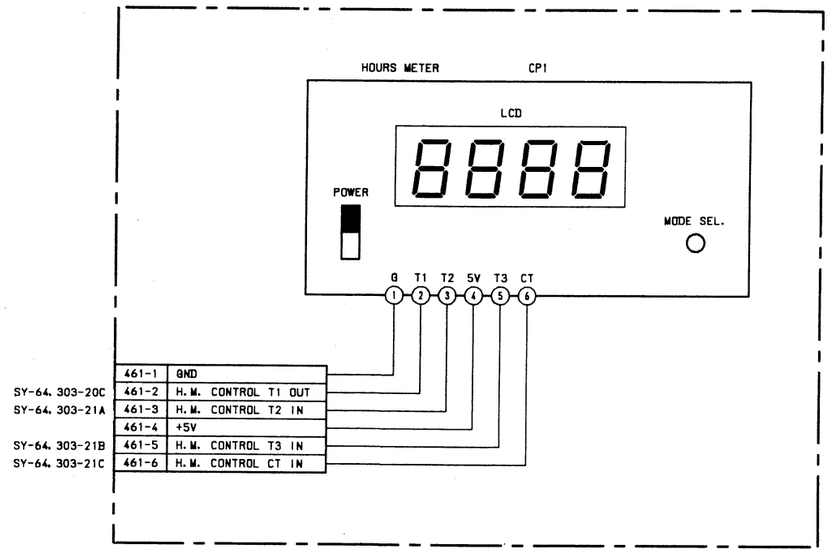


# HC-11

1-622-595-11
BVW-60P BVW-75P
BVW-65P
BVW-70P

KY-96C, KY-107A, DP-71A, PTC-32, PT-9

**KY-96C;** KEYBOARD
**KY-107A;** KEYBOARD
**DP-71A;** TIME COUNTER DISPLAY
**PTC-32;** SEARCH DIAL
**PT-9;** POWER TRANSISTOR

NOTE

| MARK | CHANGE INFORMATION | SERIAL NO. |
|---|---|---|
| *1 | TP1, 2, 3, 4, 5, 6 DELETED | S/N 10913 ~ |

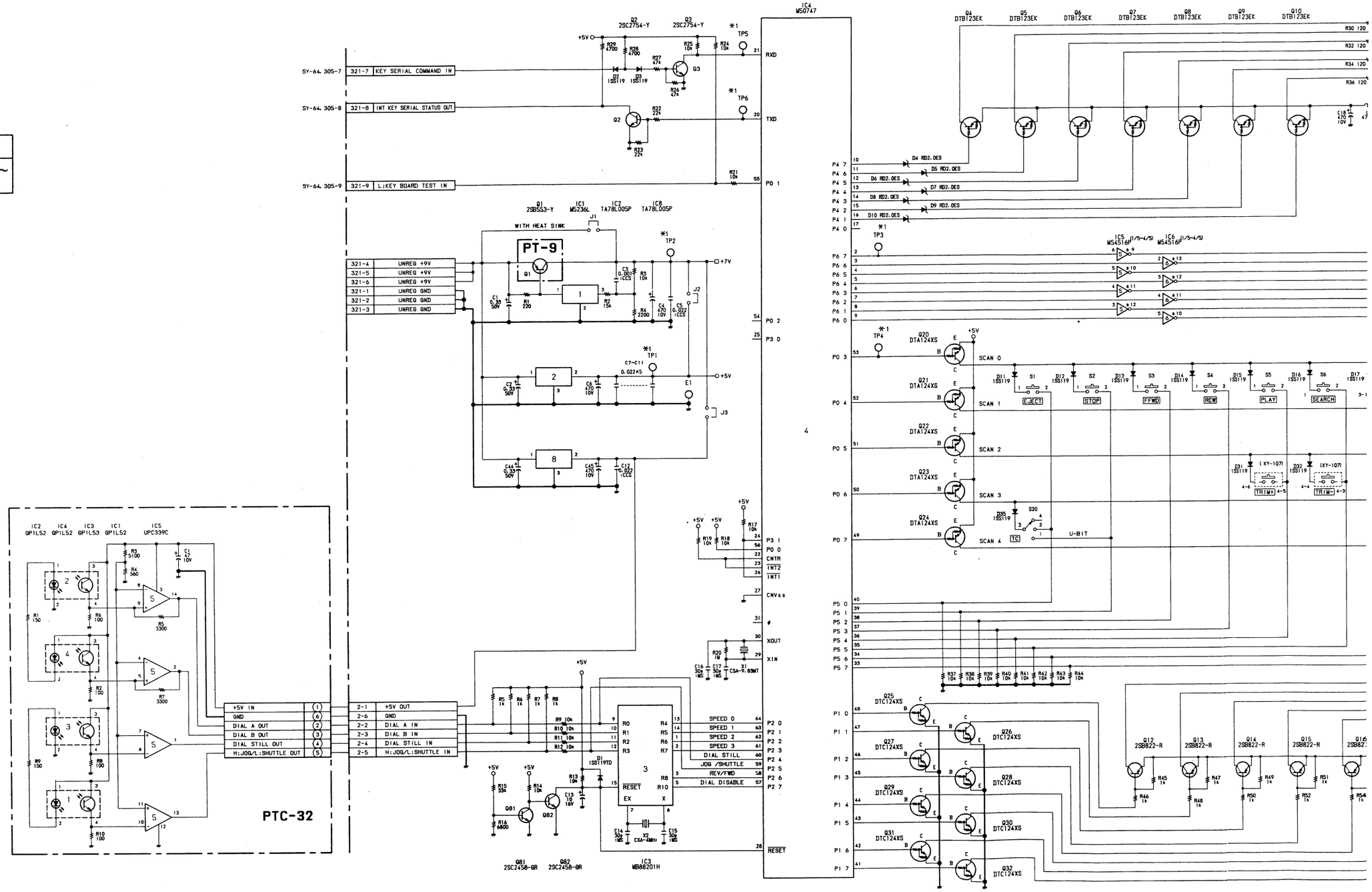

KY-96C, KY-107A, DP-71A, PTC-32, PT-9

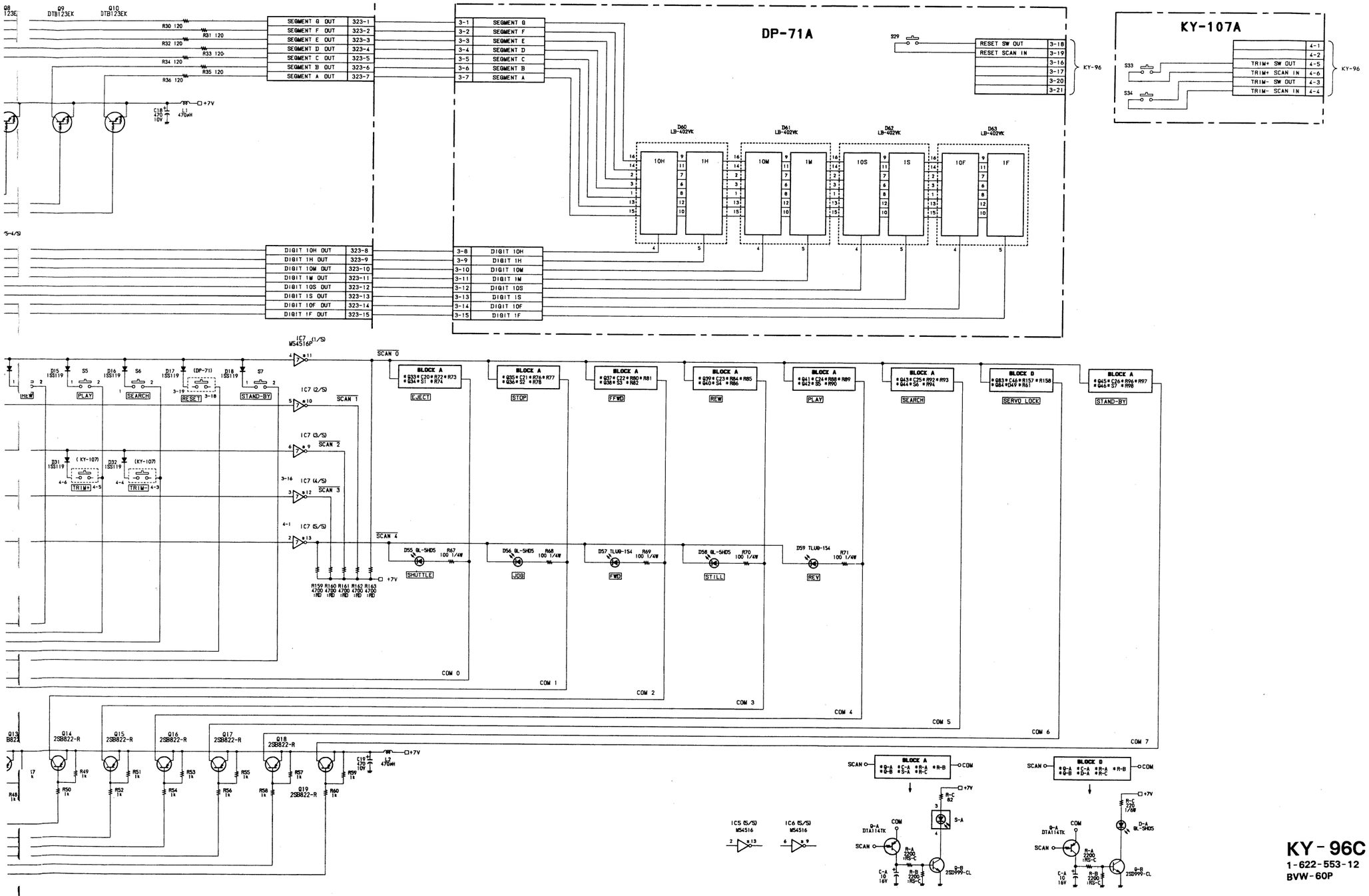






**KY-96C**
1-622-553-12
BVW-60P

# TC-40AP; LTC PB AMPLIFIER

NOTE

| MARK | CHANGE INFORMATION | SERIAL NO. |
|---|---|---|
| *1 | C403 47/16V DELETED<br>IC206 TL082CPS → NJM082M<br>Q216 DTC144EK DELETED<br>R360 4700 ADDED | S/N 10456 ～ |
| *2 | DELETED<br>C233,C234,C239,<br>C240,C241,C242,<br>R237,RV201<br>TP205, TP206, E201<br>C280 0.15/35V → 1/50V<br>R359 330k → 47k<br>R450 10 ADDED<br>R451 620 ADDED<br>R238 → R237<br>R258 → JR408<br>R261 → JR409<br>R269 → JR410<br>R270 → JR411<br>R271 → JR412<br>R272 → JR413 | S/N 10928 ～ |

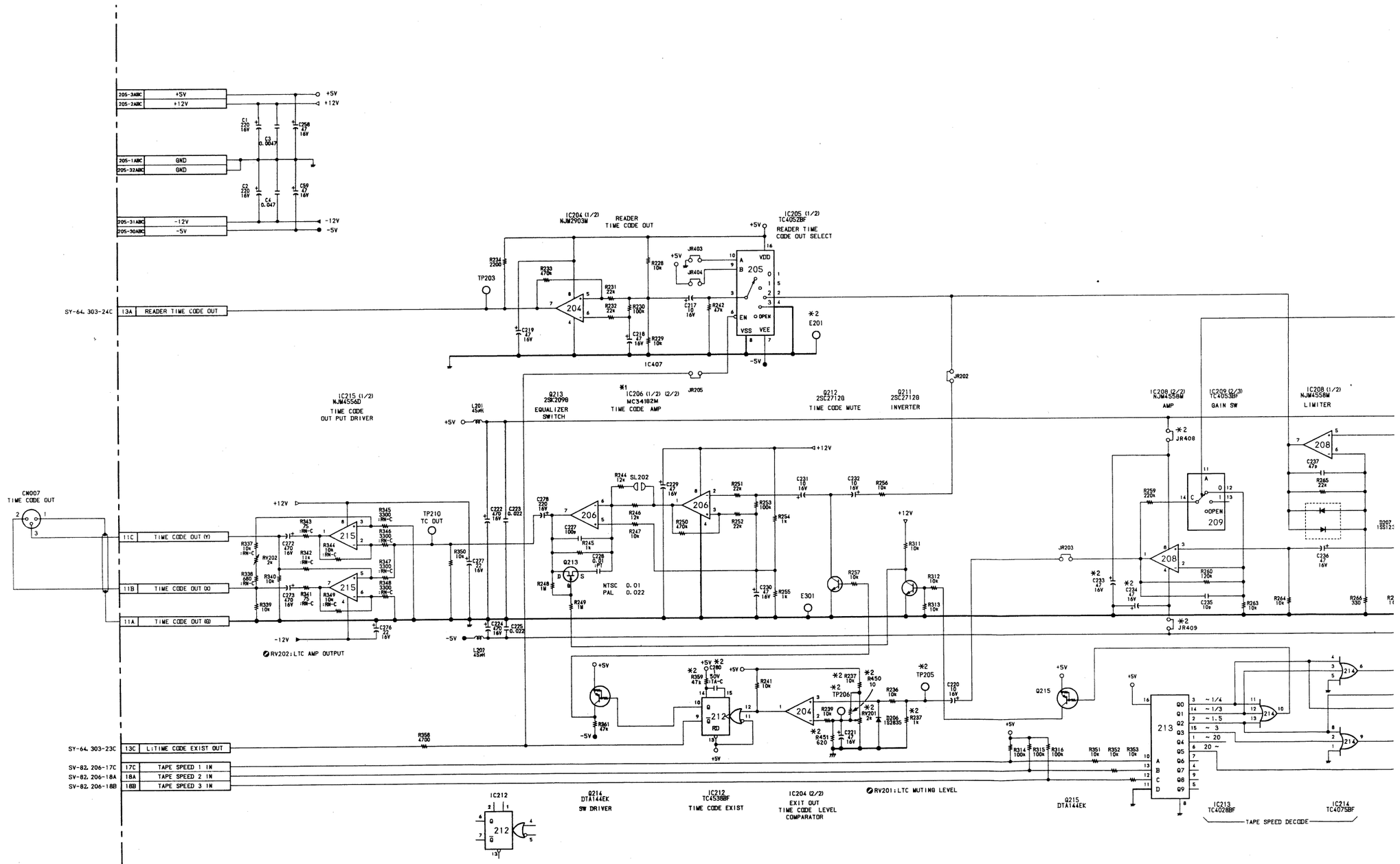

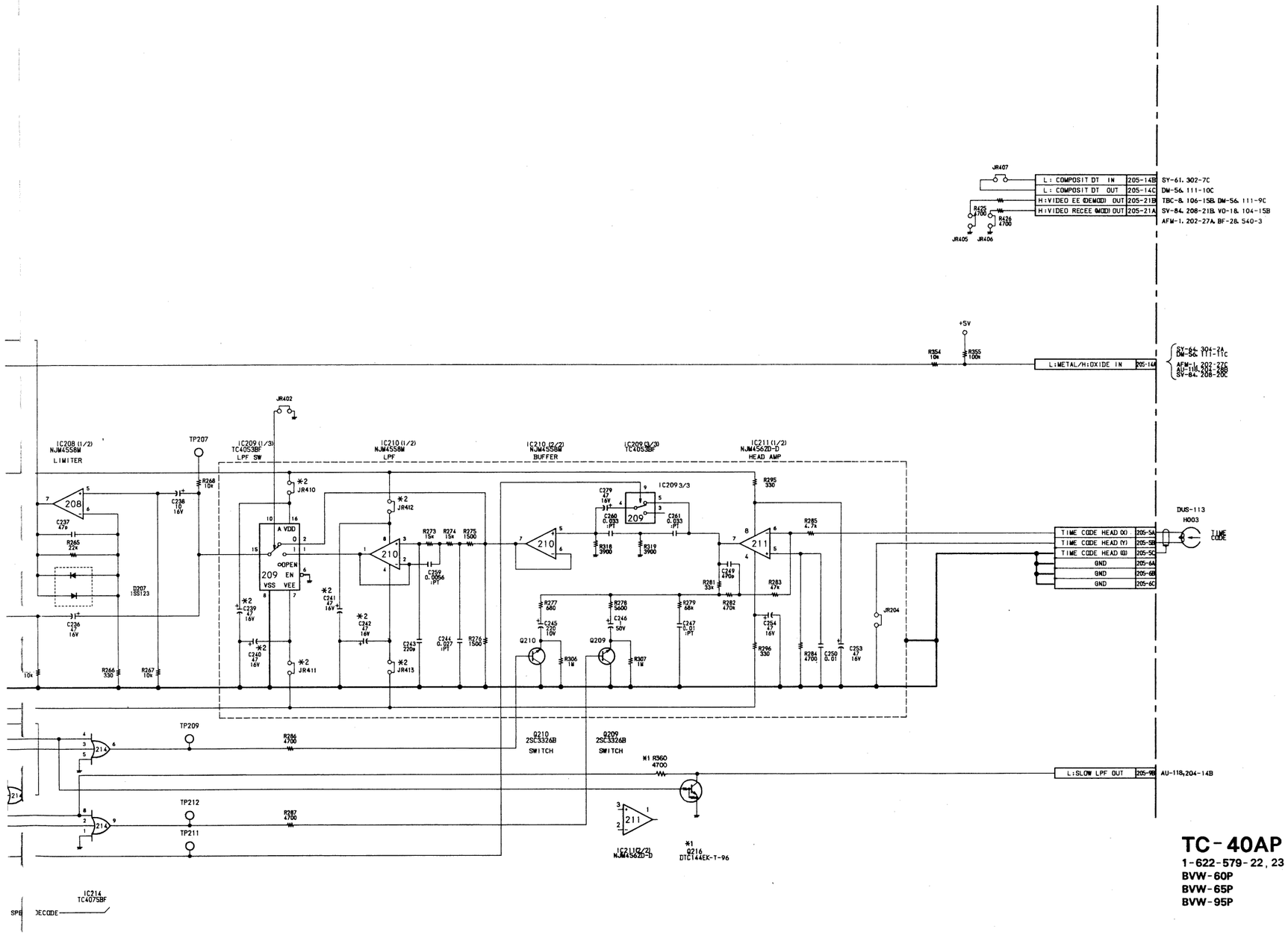


TP207(A-1)

・Play back the recorded tape in the modes below.

| | |
|---|---|
| REW | FWD × 1/5 |
| REV × 5 | FWD × 5 |
| REV × 1/5 | F.FWD |

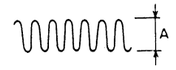


A = 100mV or more (OXIDE TAPE)
A = 130mV or more (METAL TAPE)

TP210(D-1)

・Play back a CTL signal on alignment tape CR5-1A.

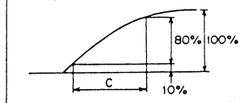


C = 25 ± 5μsec

・Play back a CTL signal on alignment tape CR5-1A in the FWD x 5 mode.

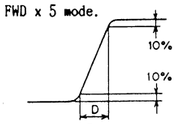


D = 5μsec

**TC-40AP**
**1-622-579-22, 23**
**BVW-60P**
**BVW-65P**
**BVW-95P**

AC-81/96, C1, C2, M1, M2

**AC-81/96** ; RELAY BOARD OF AC INLET
**C1** ; SWITCHING REGULATOR
**C2** ; SWITCHING REGULATOR
**M1** ; SWITCHING REGULATOR
**M2** ; SWITCHING REGULATOR

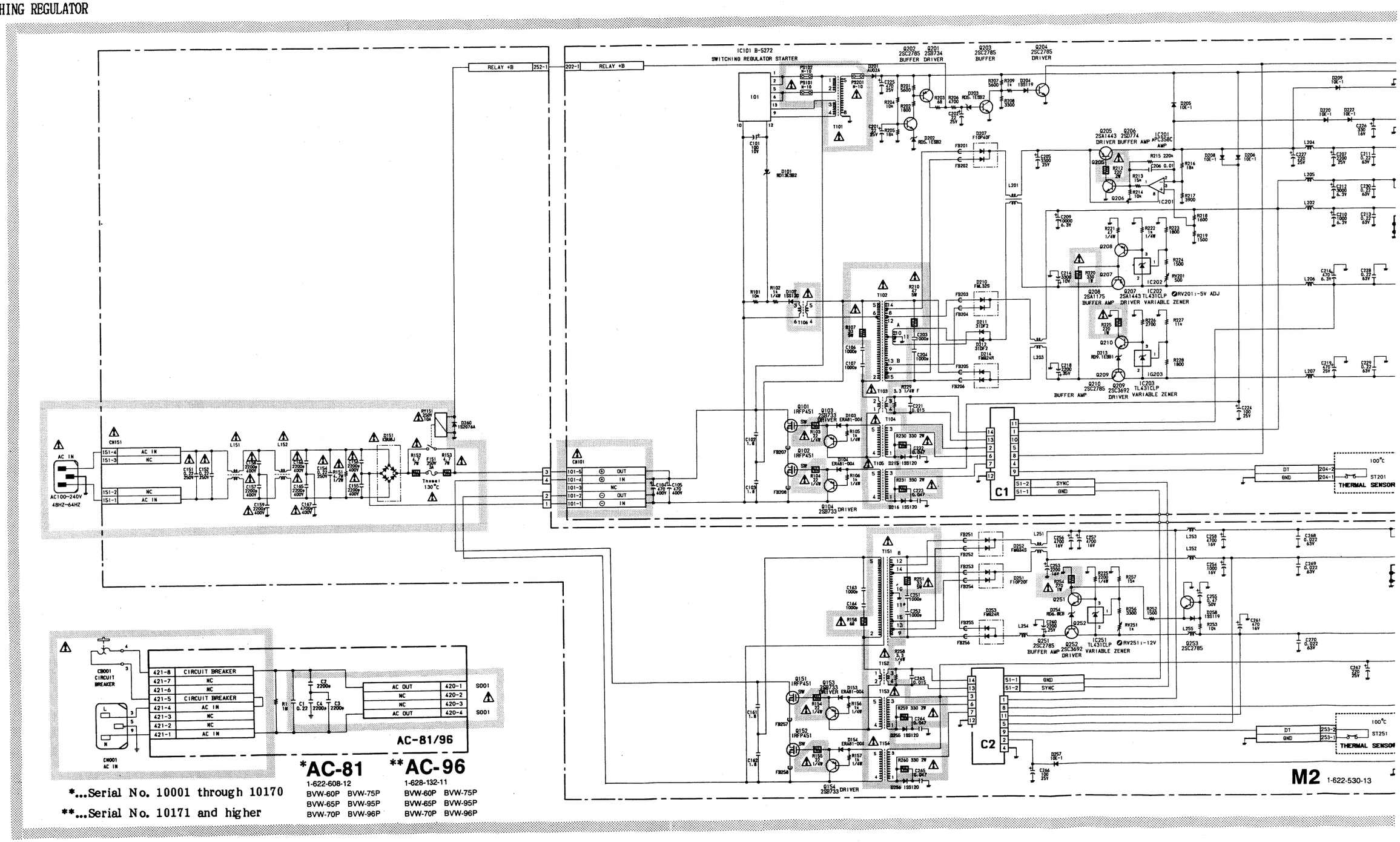


***AC-81**
1-622-608-12
BVW-60P BVW-75P
BVW-65P BVW-95P
BVW-70P BVW-96P

****AC-96**
1-628-132-11
BVW-60P BVW-75P
BVW-65P BVW-95P
BVW-70P BVW-96P

*...Serial No. 10001 through 10170
**...Serial No. 10171 and higher

**NOTE:**

**The shaded and ⚠-marked components are critical to safety.**
**Replace only with same components as specified.**

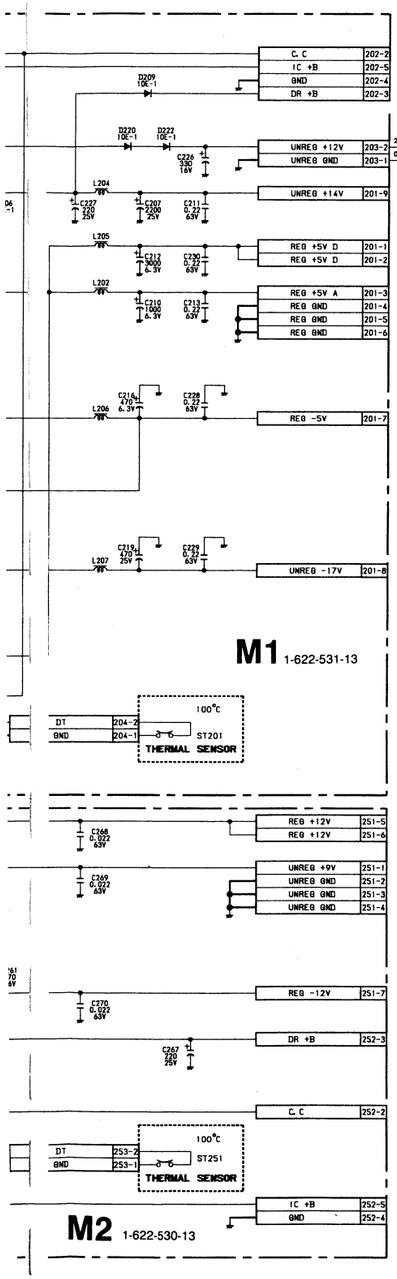


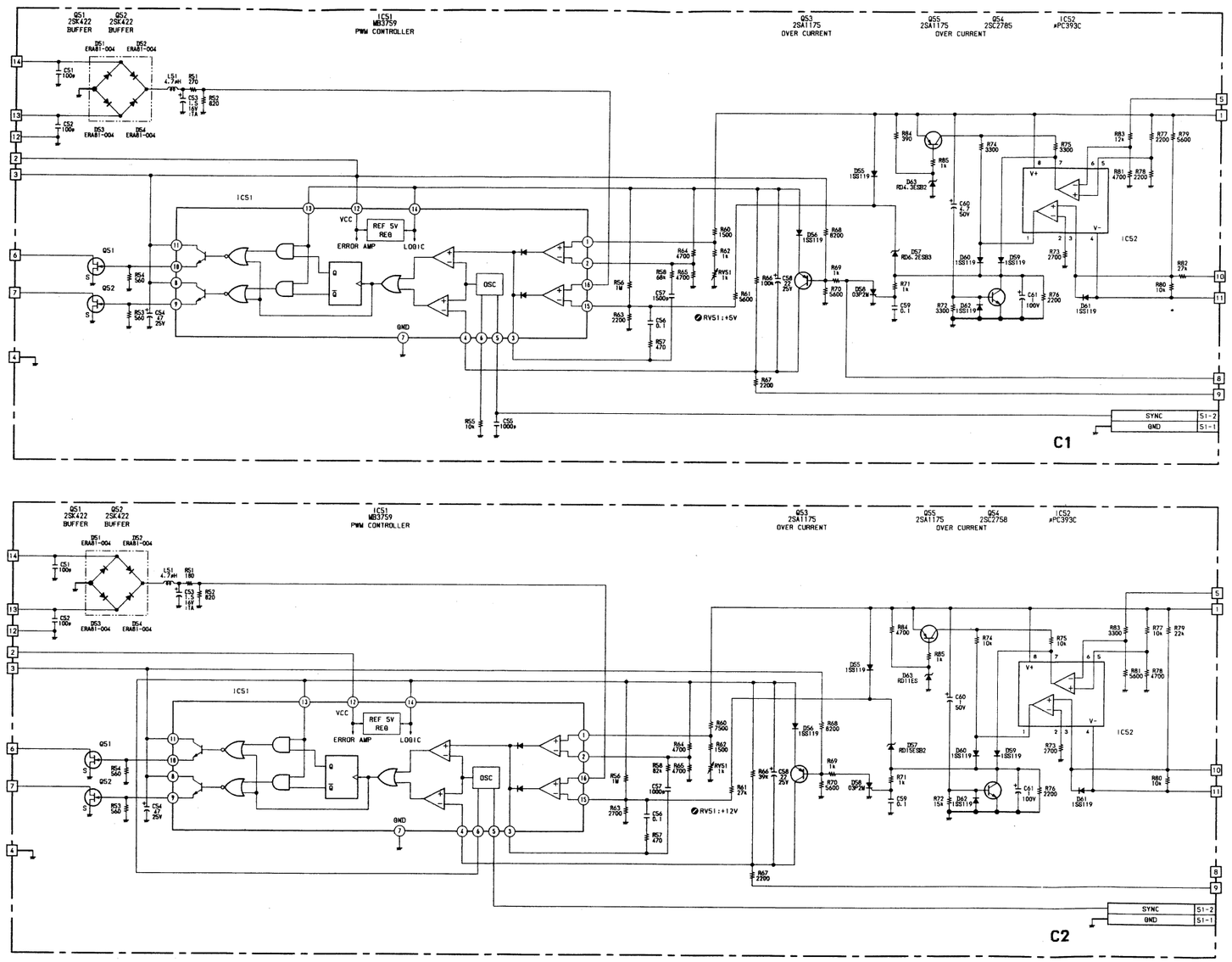


**UR-21B**
**1-413-307-24**
**BVW-60P BVW-70P**
**BVW-65P BVW-75P**
**BVW-95P BVW-96P**

# MB-191C (1/4); MOTHER BOARD

S/N 10001 through 10712

NOTE

| MARK | CHANGE INFORMATION | SERIAL NO. |
|---|---|---|
| *1 | DEC-39A → DEC-46AP | S/N 10623 ~ |

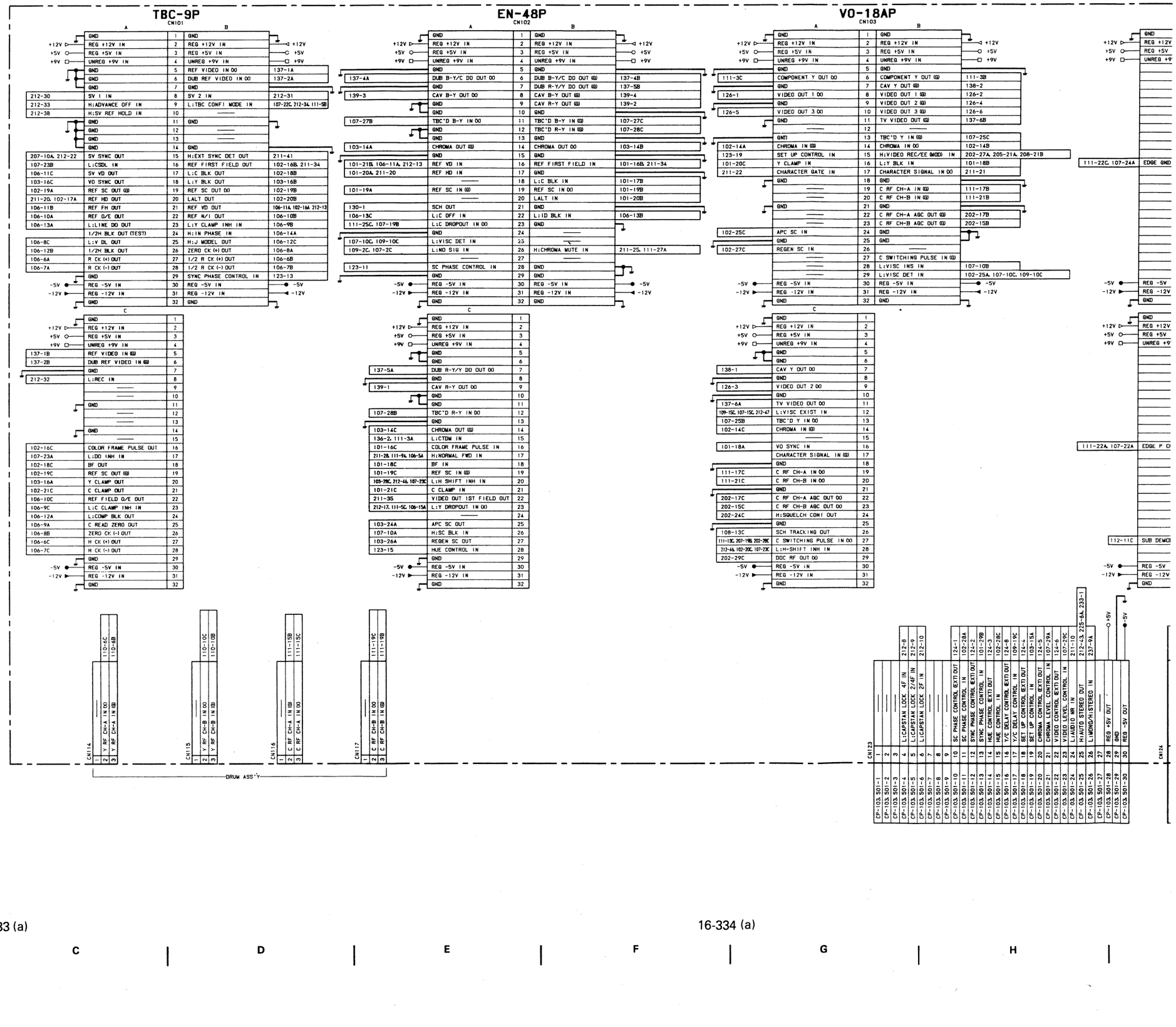


16-333 (a)

16-334 (a)

## ※1 DEC-46AP

CN105

| A | | B | |
|---|---|---|---|
| GND | 1 | GND | |
| +12V REG +12V IN | 2 | REG +12V IN | +12V |
| +5V REG +5V IN | 3 | REG +5V IN | +5V |
| +9V UNREG +9V IN | 4 | UNREG +9V IN | +9V |
| —— | 5 | —— | |
| —— | 6 | —— | |
| —— | 7 | —— | |
| —— | 8 | —— | |
| —— | 9 | —— | |
| —— | 10 | —— | |
| —— | 11 | —— | |
| —— | 12 | —— | |
| —— | 13 | —— | |
| —— | 14 | —— | |
| —— | 15 | —— | |
| 111-22C, 107-24A EDGE GND | 16 | EDGE N OUT | 111-22B, 107-22B |
| —— | 17 | —— | |
| —— | 18 | —— | |
| —— | 19 | —— | |
| —— | 20 | —— | |
| —— | 21 | —— | |
| —— | 22 | —— | |
| —— | 23 | —— | |
| —— | 24 | —— | |
| —— | 25 | —— | |
| —— | 26 | —— | |
| —— | 27 | SUB DEMOD Y IN (G) | 114-4B |
| —— | 28 | —— | |
| —— | 29 | —— | |
| -5V REG -5V IN | 30 | REG -5V IN | -5V |
| -12V REG -12V IN | 31 | REG -12V IN | -12V |
| GND | 32 | GND | |

C

| | |
|---|---|
| GND | 1 |
| +12V REG +12V IN | 2 |
| +5V REG +5V IN | 3 |
| +9V UNREG +9V IN | 4 |
| —— | 5 |
| —— | 6 |
| —— | 7 |
| —— | 8 |
| —— | 9 |
| —— | 10 |
| —— | 11 |
| —— | 12 |
| —— | 13 |
| —— | 14 |
| —— | 15 |
| 111-22A, 107-22A EDGE P OUT | 16 |
| —— | 17 |
| —— | 18 |
| —— | 19 |
| —— | 20 |
| —— | 21 |
| —— | 22 |
| —— | 23 |
| —— | 24 |
| —— | 25 |
| —— | 26 |
| 112-11C SUB DEMOD Y IN (X) | 27 |
| —— | 28 |
| —— | 29 |
| -5V REG -5V IN | 30 |
| -12V REG -12V IN | 31 |
| GND | 32 |

## TBC-8P

CN106

| A | | B | |
|---|---|---|---|
| GND | 1 | GND | |
| +12V REG +12V IN | 2 | REG +12V IN | +12V |
| +5V REG +5V IN | 3 | REG +5V IN | +5V |
| +9V UNREG +9V IN | 4 | UNREG +9V IN | +9V |
| 102-17C, 211-28, 111-9A H:NORMAL FWD | 5 | —— | |
| 101-27A R CK (+) IN | 6 | 1/2 R CK (+) IN | 101-27B |
| 101-28A R CK (-) IN | 7 | 1/2 R CK (-) IN | 101-28B |
| 101-26B ZERO CK (+) IN | 8 | ZERO CK (-) IN | 101-26C |
| 101-25C C READ ZERO IN | 9 | L:Y CLAMP INH OUT | 101-23B |
| 101-22A REF ODD/EVEN IN | 10 | REF W/I IN | 101-22B |
| 102-16A, 212-13, 101-21B REF VD IN | 11 | REF FH IN | 101-21A |
| 101-24C L:COMP BLK IN | 12 | 1/2 H BLK IN | 101-26A |
| 101-23A L:LINE DO | 13 | L:ID BLK OUT | 102-22B |
| 101-24B H:INPHASE OUT | 14 | DT V IN | 212-42 |
| 212-17, 102-23C, 111-5C L:Y DROPOUT IN | 15 | H:VIDEO EE (DEMOD) IN | 205-21B, 111-9C |
| 108-16A Y WRITE ZERO IN | 16 | GND | 108-16B |

C

| | |
|---|---|
| GND | 1 |
| +12V REG +12V IN | 2 |
| +5V REG +5V IN | 3 |
| +9V UNREG +9V IN | 4 |
| —— | 5 |
| 101-27C H CK (+) IN | 6 |
| 101-28C H CK (-) IN | 7 |
| 101-25A L:V DL IN | 8 |
| 101-23C L:C CLAMP INH OUT | 9 |
| 101-22C REF FIELD D/E IN | 10 |
| 101-17A SV VD IN | 11 |
| 101-25B H:J MODEL IN | 12 |
| 102-22A L:C OFF OUT | 13 |
| —— | 14 |
| —— | 15 |
| 111-6B, 108-16C BID LEVEL OUT | 16 |

CN107

| A | | B | |
|---|---|---|---|
| 109-1A, 110-15C Y GATED H OUT | 1 | Y PB SYNC IN | 109-1B |
| 210-11A, 109-2A L:Y SDO OUT | 2 | TBC SWITCHING PULSE IN | 207-16C |
| 111-8B, 109-3A L:F BID OUT | 3 | L:Y DOB OUT | 109-3B |
| 109-4A DATA (G) | 4 | DATA (G) | 109-4B |
| 109-5A Y WRITE CK IN | 5 | GND | 109-5B |
| 109-6A Y-AD DATA $2^7$ IN | 6 | GND | 109-6B |
| 109-7A Y-AD DATA $2^6$ IN | 7 | GND | 109-7B |
| 109-8A Y-AD DATA $2^5$ IN | 8 | GND | 109-8B |
| 109-9A Y-AD DATA $2^4$ IN | 9 | GND | 109-9B |
| 102-26C H:SC BLK OUT | 10 | L:VISC INS OUT | 103-28B |
| 109-11A C-AD DATA $2^7$ IN | 11 | GND | 109-11B |
| 109-12A C-AD DATA $2^6$ IN | 12 | GND | 109-12B |
| 109-13A C-AD DATA $2^3$ IN | 13 | GND | 109-13B |
| 109-14A C-AD DATA $2^2$ IN | 14 | GND | 109-14B |
| 109-15A C WRITE CK IN | 15 | GND | 109-15B |
| 109-16A DATA (G) | 16 | DATA (G) | 109-16B |
| 210-11B, 109-17A L:C SDO OUT | 17 | L:C DOB OUT | 109-17B |
| 210-13A, 109-18A C GATED H OUT | 18 | C PB SYNC IN | 109-18B |
| 109-19A C WRITE ZERO IN | 19 | L:C DROPOUT (X) IN | 102-23A, 111-25C |
| 211-36 PB B-Y FP1 OUT | 20 | PB B-Y FP2 OUT | 211-37 |
| 212-37 H:COMB FILTER OFF IN | 21 | DL PB Y OUT | 212-40 |
| 105-16C, 111-22A EDGE-P IN | 22 | EDGE-N IN | 111-22B, 105-16B |
| 101-17C L:DO INH OUT | 23 | L:CS DL OUT | 101-16A |
| 105-16A, 111-22C EDGE GND | 24 | GND | |
| TBC'D Y OUT (G) | 25 | TBC'D Y OUT (X) | 103-13C |
| GND | 26 | GND | |
| TBC'D B-Y OUT (G) | 27 | TBC'D B-Y OUT (X) | 102-11A |
| TBC'D R-Y OUT (G) | 28 | TBC'D R-Y OUT (X) | 102-12C |
| 123-21 CHROMA LEVEL CONTROL IN | 29 | GND | |
| -5V REG -5V IN | 30 | REG -5V IN | -5V |
| -12V REG -12V IN | 31 | REG -12V IN | -12V |
| GND | 32 | GND | |

C

| | |
|---|---|
| 212-14, 210-13B, 109-1C Y COUNT H IN | 1 |
| 102-26A, 109-2C L:HD SIG OUT | 2 |
| 109-3C GRY SWITCH CONTROL OUT | 3 |
| 109-4C DATA (G) | 4 |
| 109-5C VISC IN | 5 |
| 109-6C Y-AD DATA $2^6$ IN | 6 |
| 109-7C Y-AD DATA $2^4$ IN | 7 |
| 109-8C Y-AD DATA $2^2$ IN | 8 |
| 109-9C Y-AD DATA $2^0$ IN | 9 |
| 102-25A, 109-10C L:VISC DET OUT | 10 |
| 109-11C C-AD DATA $2^6$ IN | 11 |
| 109-12C C-AD DATA $2^4$ IN | 12 |
| 109-13C C-AD DATA $2^2$ IN | 13 |
| 109-14C C-AD DATA $2^0$ IN | 14 |
| 109-15C, 212-47, 103-12C L:VISC EXIST OUT | 15 |
| 109-16C DATA (G) | 16 |
| 109-17C L:C W CLAMP INH OUT | 17 |
| 212-15, 109-18C C COUNT H IN | 18 |
| 212-41 L:DET NG OUT | 19 |
| 211-33 H:IN PHASE IN | 20 |
| 211-29, 109-20B L:NOISELESS PB IN | 21 |
| 111-5B, 212-34, 101-9B L:TBC CONFI MODE IN | 22 |
| 212-46, 102-20C, 103-28C L:H SHIFT INH IN | 23 |
| GND | 24 |
| 103-13B TBC'D Y OUT (G) | 25 |
| GND | 26 |
| 102-11B TBC'D B-Y OUT (G) | 27 |
| 102-12B TBC'D R-Y OUT (G) | 28 |
| 123-23 VIDEO LEVEL CONTROL IN | 29 |
| -5V REG -5V IN | 30 |
| -12V REG -12V IN | 31 |
| GND | 32 |

CN124

| | | |
|---|---|---|
| LP-103, 501-21 | 20 | LUMINANCE LUMINANCE (EXT) OUT |
| LP-103, 501-22 | 21 | CHROMA LEVEL CONTROL IN |
| 501-22 | | VIDEO CO OUT |
| CP-103, 501-23 | 23 | VIDEO LEVEL CONTROL IN |
| CP-103, 501-24 | 24 | L:AUDIO MR IN |
| CP-103, 501-25 | 25 | H:AUTO STEREO OUT |
| CP-103, 501-26 | 26 | L:MONO/H:STEREO IN |
| CP-103, 501-27 | 27 | —— |
| CP-103, 501-28 | 28 | REG +5V OUT |
| CP-103, 501-29 | 29 | GND |
| CP-103, 501-30 | 30 | REG -5V OUT |

CN124

| | | |
|---|---|---|
| RM-57, 451-10 | 1 | SC PHASE CONTROL (EXT) IN |
| RM-57, 451-12 | 2 | SYNC PHASE CONTROL (EXT) IN |
| RM-57, 451-11 | 3 | HUE CONTROL (EXT) IN |
| RM-57, 451-8 | 4 | SET UP CONTROL (EXT) IN |
| RM-57, 451-7 | 5 | CHROMA CONTROL (EXT) IN |
| RM-57, 451-9 | 6 | VIDEO CONTROL (EXT) IN |
| RM-57, 451-5 | 7 | REG +12V OUT |
| RM-57, 451-4 | 8 | Y/C DELAY CONTROL (EXT) IN |
| RM-57, 451-6 | 9 | REG -12V OUT |
| | 10 | —— |

CN125

| | | |
|---|---|---|
| CN PANEL 019-2 | 1A | DUB Y OUT (G) |
| CN PANEL 019-8 | 2A | DUB R-Y/B-Y OUT (G) |
| CN PANEL 019-1 | 1B | DUB Y OUT (X) |
| CN PANEL 019-7 | 2B | DUB R-Y/B-Y OUT (X) |

CN126

| | | |
|---|---|---|
| CN PANEL 015-X | 1 | VIDEO OUT 1 (X) |
| CN PANEL 015-8 | 2 | VIDEO OUT 1 (G) |
| CN PANEL 016-X | 3 | VIDEO OUT 2 (X) |
| CN PANEL 016-8 | 4 | VIDEO OUT 2 (G) |
| CN PANEL 017-X | 5 | VIDEO OUT 3 (X) |
| CN PANEL 017-8 | 6 | VIDEO OUT 3 (G) |

**MB-191C(1/4)**
**1-624-047-11**
**BVW-60P**

16-335 (a)

16-336 (a)

I J K L M N O P

# MB-191C (1/4); MOTHER BOARD

S/N 10713 and higher

## TBC-9P
CN101

| A | | B | |
|---|---|---|---|
| | GND | 1 | GND |
| +12V | REG +12V IN | 2 | REG +12V IN |
| +5V | REG +5V IN | 3 | REG +5V IN |
| +9V | UNREG +9V IN | 4 | UNREG +9V IN |
| | GND | 5 | REF VIDEO IN 00 |
| | GND | 6 | DUB REF VIDEO IN 00 |
| | GND | 7 | GND |
| 212-30 | SV 1 IN | 8 | SV 2 IN |
| 212-33 | H:ADVANCE OFF IN | 9 | L:TBC CONFI MODE IN |
| 212-38 | H:SV REF HOLD IN | 10 | |
| | GND | 11 | GND |
| | GND | 12 | |
| | GND | 13 | |
| | GND | 14 | GND |
| 207-10A, 212-22 | SV SYNC OUT | 15 | H:EXT SYNC DET OUT |
| 107-23B | L:CSDL IN | 16 | REF FIRST FIELD OUT |
| 106-11C | SV VD OUT | 17 | L:C BLK OUT |
| 103-16C | VD SYNC OUT | 18 | L:Y BLK OUT |
| 102-19A | REF SC OUT (@) | 19 | REF SC OUT 00 |
| 211-20, 102-17A | REF HD OUT | 20 | LALT OUT |
| 106-11B | REF FH OUT | 21 | REF VD OUT |
| 106-10A | REF O/E OUT | 22 | REF N/I OUT |
| 106-13A | HD | 23 | L:Y CLAMP INH IN |
| | 1/2H BLK OUT (TEST) | 24 | H:IN PHASE IN |
| 106-8C | L:V DL OUT | 25 | H:J MODEL OUT |
| 106-12B | 1/2H BLK OUT | 26 | ZERO CK (+) OUT |
| 106-6A | R CK (+) OUT | 27 | 1/2 R CK (+) OUT |
| 106-7A | R CK (-) OUT | 28 | 1/2 R CK (-) OUT |
| | GND | 29 | SYNC PHASE CONTROL IN |
| -5V | REG -5V IN | 30 | REG -5V IN |
| -12V | REG -12V IN | 31 | REG -12V IN |
| | GND | 32 | GND |

| C | | |
|---|---|---|
| | GND | 1 |
| +12V | REG +12V IN | 2 |
| +5V | REG +5V IN | 3 |
| +9V | UNREG +9V IN | 4 |
| 137-1B | REF VIDEO IN (@) | 5 |
| 137-2B | DUB REF VIDEO IN (@) | 6 |
| | GND | 7 |
| 212-32 | L:REC IN | 8 |
| | | 9 |
| | | 10 |
| | GND | 11 |
| | | 12 |
| | | 13 |
| | GND | 14 |
| | | 15 |
| 102-16C | COLOR FRAME PULSE OUT | 16 |
| 107-23A | L:DO INH IN | 17 |
| 102-18C | BF OUT | 18 |
| 102-19C | REF SC OUT (@) | 19 |
| 103-16A | Y CLAMP OUT | 20 |
| 102-21C | C CLAMP OUT | 21 |
| 106-10C | REF FIELD O/E OUT | 22 |
| 106-9C | L:C CLAMP INH IN | 23 |
| 106-12A | H;CHROMA MUTE | 24 |
| 106-9A | C READ ZERO OUT | 25 |
| 106-8B | ZERO CK (-) OUT | 26 |
| 106-6C | H CK (+) OUT | 27 |
| 106-7C | H CK (-) OUT | 28 |
| | GND | 29 |
| -5V | REG -5V IN | 30 |
| -12V | REG -12V IN | 31 |
| | GND | 32 |

## EN-48P
CN102

| A | | B | |
|---|---|---|---|
| | GND | 1 | GND |
| +12V | REG +12V IN | 2 | REG +12V IN |
| +5V | REG +5V IN | 3 | REG +5V IN |
| +9V | UNREG +9V IN | 4 | UNREG +9V IN |
| | GND | 5 | GND |
| 137-4A | DUB B-Y/C DO OUT 00 | 6 | DUB B-Y/C DO OUT (@) |
| | GND | 7 | DUB R-Y/Y DO OUT (@) |
| 139-3 | CAV B-Y OUT 00 | 8 | CAV B-Y OUT (@) |
| | GND | 9 | CAV R-Y OUT (@) |
| | GND | 10 | GND |
| 107-27B | TBC'D B-Y IN 00 | 11 | TBC'D B-Y IN (@) |
| | GND | 12 | TBC'D R-Y IN (@) |
| | GND | 13 | GND |
| 103-14A | CHROMA OUT (@) | 14 | CHROMA OUT 00 |
| | GND | 15 | GND |
| 101-21B, 106-11A, 212-13 | REF VD IN | 16 | REF FIRST FIELD IN |
| 101-20A, 211-20 | REF HD IN | 17 | GND |
| | | 18 | L:C BLK IN |
| 101-19A | REF SC IN (@) | 19 | REF SC IN 00 |
| | | 20 | LALT IN |
| 130-1 | SCH OUT | 21 | GND |
| 106-13C | L:C OFF IN | 22 | L:ID BLK IN |
| 111-25C, 107-19B | L:C DROPOUT IN 00 | 23 | GND |
| | GND | 24 | |
| 107-10C, 109-10C | L:VISC DET IN | 25 | |
| 109-2C, 107-2C | L:HD SIG IN | 26 | H:CHROMA MUTE IN |
| | | 27 | |
| 123-11 | SC PHASE CONTROL IN | 28 | GND |
| | GND | 29 | GND |
| -5V | REG -5V IN | 30 | REG -5V IN |
| -12V | REG -12V IN | 31 | REG -12V IN |
| | GND | 32 | GND |

| C | | |
|---|---|---|
| | GND | 1 |
| +12V | REG +12V IN | 2 |
| +5V | REG +5V IN | 3 |
| +9V | UNREG +9V IN | 4 |
| | GND | 5 |
| | GND | 6 |
| 137-5A | DUB R-Y/Y DO OUT 00 | 7 |
| | GND | 8 |
| 139-1 | CAV R-Y OUT 00 | 9 |
| | GND | 10 |
| | GND | 11 |
| 107-28B | TBC'D R-Y IN 00 | 12 |
| | GND | 13 |
| 103-14C | CHROMA OUT (@) | 14 |
| 136-2, 111-3A | L:CTDW IN | 15 |
| 101-16C | COLOR FRAME PULSE IN | 16 |
| 211-28, 111-9A, 106-5A | H:NORMAL FWD IN | 17 |
| 101-18C | BF IN | 18 |
| 101-19C | REF SC IN (@) | 19 |
| 103-28C, 212-46, 107-23C | L:H SHIFT INH IN | 20 |
| 101-21C | C CLAMP IN | 21 |
| 211-35 | VIDEO OUT 1ST FIELD OUT | 22 |
| 212-17, 111-5C, 106-15A | L:Y DROPOUT IN 00 | 23 |
| | | 24 |
| 103-24A | APC SC OUT | 25 |
| 107-10A | H:SC BLK IN | 26 |
| 103-26A | REGEN SC OUT | 27 |
| 123-15 | HUE CONTROL IN | 28 |
| | GND | 29 |
| -5V | REG -5V IN | 30 |
| -12V | REG -12V IN | 31 |
| | GND | 32 |

## VO-18AP
CN103

| A | | B | |
|---|---|---|---|
| | GND | 1 | GND |
| +12V | REG +12V IN | 2 | REG +12V IN |
| +5V | REG +5V IN | 3 | REG +5V IN |
| +9V | UNREG +9V IN | 4 | UNREG +9V IN |
| | GND | 5 | GND |
| 111-3C | COMPONENT Y OUT 00 | 6 | COMPONENT Y OUT (@) |
| | GND | 7 | CAV Y OUT (@) |
| 126-1 | VIDEO OUT 1 00 | 8 | VIDEO OUT 1 (@) |
| | GND | 9 | VIDEO OUT 2 (@) |
| 126-5 | VIDEO OUT 3 00 | 10 | VIDEO OUT 3 (@) |
| | GND | 11 | TV VIDEO OUT (@) |
| | | 12 | |
| | GND | 13 | TBC'D Y IN (@) |
| 102-14A | CHROMA IN (@) | 14 | CHROMA IN 00 |
| 123-19 | SET UP CONTROL IN | 15 | H:VIDEO REC/EE (@00) IN |
| 101-20C | Y CLAMP IN | 16 | L:Y BLK IN |
| 211-22 | CHARACTER GATE IN | 17 | CHARACTER SIGNAL IN 00 |
| | GND | 18 | GND |
| | | 19 | C RF CH-A IN (@) |
| | | 20 | C RF CH-B IN (@) |
| | GND | 21 | GND |
| | | 22 | C RF CH-A AGC OUT (@) |
| | | 23 | C RF CH-B AGC OUT (@) |
| 102-25C | APC SC IN | 24 | GND |
| | GND | 25 | GND |
| 102-27C | REGEN SC IN | 26 | |
| | | 27 | C SWITCHING PULSE IN (@) |
| | | 28 | L:VISC INS IN |
| | | 29 | L:VISC DET IN |
| -5V | REG -5V IN | 30 | REG -5V IN |
| -12V | REG -12V IN | 31 | REG -12V IN |
| | GND | 32 | GND |

| C | | |
|---|---|---|
| | GND | 1 |
| +12V | REG +12V IN | 2 |
| +5V | REG +5V IN | 3 |
| +9V | UNREG +9V IN | 4 |
| | GND | 5 |
| | GND | 6 |
| 138-1 | CAV Y OUT 00 | 7 |
| | GND | 8 |
| 126-3 | VIDEO OUT 2 00 | 9 |
| | GND | 10 |
| 137-6A | TV VIDEO OUT 00 | 11 |
| 109-15C, 107-15C, 212-47 | L:VISC EXIST IN | 12 |
| 107-25B | TBC'D Y IN 00 | 13 |
| 102-14C | CHROMA IN (@) | 14 |
| | | 15 |
| 101-18A | VD SYNC IN | 16 |
| | CHARACTER SIGNAL IN (@) | 17 |
| | GND | 18 |
| 111-17C | C RF CH-A IN 00 | 19 |
| 111-21C | C RF CH-B IN 00 | 20 |
| | GND | 21 |
| 202-17C | C RF CH-A AGC OUT 00 | 22 |
| 202-15C | C RF CH-B AGC OUT 00 | 23 |
| 202-24C | H:SQUELCH CONT OUT | 24 |
| | GND | 25 |
| 108-13C | SCH TRACKING OUT | 26 |
| 111-13C, 207-19B, 202-28C | C SWITCHING PULSE IN 00 | 27 |
| 212-46, 102-20C, 107-23C | L:H-SHIFT INH IN | 28 |
| 202-29C | DOC RF OUT 00 | 29 |
| -5V | REG -5V IN | 30 |
| -12V | REG -12V IN | 31 |
| | GND | 32 |

| | | | |
|---|---|---|---|
| | GND | 1 | GND |
| +12V | REG +12V IN | 2 | REG +12V IN |
| +5V | REG +5V IN | 3 | REG +5V I |
| +9V | UNREG +9V IN | 4 | UNREG +9V |
| | | | |
| 111-22C, 107-24A | EDGE GND | | |
| | | | |
| -5V | REG -5V I | | |
| -12V | REG -12V | | |
| | GND | | |

| | | | |
|---|---|---|---|
| | GND | 1 | |
| +12V | REG +12V IN | 2 | |
| +5V | REG +5V IN | 3 | |
| +9V | UNREG +9V IN | 4 | |
| | | | |
| 111-22A, 107-22A | EDGE P OU | | |
| | | | |
| | | | |
| 112-11C | SUB DEMOD | | |
| | | | |
| -5V | REG -5V | | |
| -12V | REG -12V | | |
| | GND | | |

CN114: 1 —; 2 Y RF CH-A IN 00 (110-6C); 3 Y RF CH-A IN (@) (110-6B)

CN115: 1 —; 2 Y RF CH-B IN 00 (110-10C); 3 Y RF CH-B IN (@) (110-10B)

CN116: 1 —; 2 C RF CH-A IN (@) (111-13B); 3 C RF CH-A IN 00 (111-15C)

CN117: 1 —; 2 C RF CH-B IN 00 (111-19C); 3 C RF CH-B IN (@) (111-19B)

DRUM ASS'Y

CN123 → CN124

| | | | |
|---|---|---|---|
| 1 | — | | |
| 2 | — | | |
| 3 | — | 212-8 | |
| 4 | L:CAPSTAN LOCK 4F IN | 212-9 | |
| 5 | L:CAPSTAN LOCK 2/4F IN | 212-10 | |
| 6 | L:CAPSTAN LOCK 2F IN | | |
| 7 | — | | |
| 8 | — | | |
| 9 | — | 124-1 | |
| 10 | SC PHASE CONTROL EXT) OUT | 102-28A | |
| 11 | SC PHASE CONTROL IN | 124-2 | |
| 12 | SYNC PHASE CONTROL EXT) OUT | 101-29B | |
| 13 | SYNC PHASE CONTROL IN | 124-3 | |
| 14 | HUE CONTROL EXT) OUT | 102-28C | |
| 15 | HUE CONTROL IN | 124-8 | |
| 16 | Y/C DELAY CONTROL EXT) OUT | 109-19C | |
| 17 | Y/C DELAY CONTROL IN | 124-4 | |
| 18 | SET UP CONTROL EXT) OUT | 103-15A | |
| 19 | SET UP CONTROL IN | 124-5 | |
| 20 | CHROMA LEVEL CONTROL EXT) OUT | 107-29A | |
| 21 | CHROMA LEVEL CONTROL IN | 124-6 | |
| 22 | VIDEO CONTROL EXT) OUT | 107-29C | |
| 23 | VIDEO LEVEL CONTROL IN | 211-10 | |
| 24 | L:AUDIO MR IN | 212-43, 225-6A, 233-1 | |
| 25 | H:AUTO STEREO OUT | 237-9A | |
| 26 | L:MONO/H:STEREO IN | | |
| 27 | — | +5V | |
| 28 | REG +5V OUT | | |
| 29 | GND | | |
| 30 | REG -5V OUT | -5V | |

| | |
|---|---|
| CP-103.501-1 | |
| CP-103.501-2 | |
| CP-103.501-3 | |
| CP-103.501-4 | |
| CP-103.501-5 | |
| CP-103.501-6 | |
| CP-103.501-7 | |
| CP-103.501-8 | |
| CP-103.501-9 | |
| CP-103.501-10 | |
| CP-103.501-11 | |
| CP-103.501-12 | |
| CP-103.501-13 | |
| CP-103.501-14 | |
| CP-103.501-15 | |
| CP-103.501-16 | |
| CP-103.501-17 | |
| CP-103.501-18 | |
| CP-103.501-19 | |
| CP-103.501-20 | |
| CP-103.501-21 | |
| CP-103.501-22 | |
| CP-103.501-23 | |
| CP-103.501-24 | |
| CP-103.501-25 | |
| CP-103.501-26 | |
| CP-103.501-27 | |
| CP-103.501-28 | |
| CP-103.501-29 | |
| CP-103.501-30 | |

## DEC-46AP

CN105

| A | | B | |
|---|---|---|---|
| GND | 1 | GND | |
| +12V REG +12V IN | 2 | REG +12V IN | +12V |
| +5V REG +5V IN | 3 | REG +5V IN | +5V |
| +9V UNREG +9V IN | 4 | UNREG +9V IN | +9V |
| —— | 5 | —— | |
| —— | 6 | —— | |
| —— | 7 | —— | |
| —— | 8 | —— | |
| —— | 9 | —— | |
| —— | 10 | —— | |
| —— | 11 | —— | |
| —— | 12 | —— | |
| —— | 13 | —— | |
| —— | 14 | —— | |
| —— | 15 | —— | |
| 111-22C, 107-24A EDGE GND | 16 | EDGE N OUT | 111-22B, 107-22B |
| —— | 17 | —— | |
| —— | 18 | —— | |
| —— | 19 | —— | |
| —— | 20 | —— | |
| —— | 21 | —— | |
| —— | 22 | —— | |
| —— | 23 | —— | |
| —— | 24 | —— | |
| —— | 25 | —— | |
| —— | 26 | —— | |
| —— | 27 | SUB DEMOD Y IN (G) | 114-4B |
| —— | 28 | —— | |
| —— | 29 | —— | |
| -5V REG -5V IN | 30 | REG -5V IN | -5V |
| -12V REG -12V IN | 31 | REG -12V IN | -12V |
| GND | 32 | GND | |

C

| | | |
|---|---|---|
| GND | 1 | |
| +12V REG +12V IN | 2 | |
| +5V REG +5V IN | 3 | |
| +9V UNREG +9V IN | 4 | |
| —— | 5 | |
| —— | 6 | |
| —— | 7 | |
| —— | 8 | |
| —— | 9 | |
| —— | 10 | |
| —— | 11 | |
| —— | 12 | |
| —— | 13 | |
| —— | 14 | |
| —— | 15 | |
| 111-22A, 107-22A EDGE P OUT | 16 | |
| —— | 17 | |
| —— | 18 | |
| —— | 19 | |
| —— | 20 | |
| —— | 21 | |
| —— | 22 | |
| —— | 23 | |
| —— | 24 | |
| —— | 25 | |
| —— | 26 | |
| 112-11C SUB DEMOD Y IN (X) | 27 | |
| —— | 28 | |
| —— | 29 | |
| -5V REG -5V IN | 30 | |
| -12V REG -12V IN | 31 | |
| GND | 32 | |

## TBC-12P

CN106

| A | | B | |
|---|---|---|---|
| GND | 1 | GND | |
| +12V REG +12V IN | 2 | REG +12V IN | +12V |
| +5V REG +5V IN | 3 | REG +5V IN | +5V |
| +9V UNREG +9V IN | 4 | UNREG +9V IN | +9V |
| 102-17C, 211-28, 111-9A H:NORMAL FWD | 5 | —— | |
| 101-27A R CK(+) IN | 6 | 1/2 R CK(+) IN | 101-27B |
| 101-28A R CK(-) IN | 7 | 1/2 R CK(-) IN | 101-28B |
| 101-26B ZERO CK(+) IN | 8 | ZERO CK(-) IN | 101-26C |
| 101-25C C READ ZERO IN | 9 | L:Y CLAMP INH OUT | 101-23B |
| 101-22A REF ODD/EVEN IN | 10 | REF W/I IN | 101-22B |
| 102-16A, 212-13, 101-21B REF VD IN | 11 | REF FH IN | 101-21A |
| 304-1C H:CHROMA MUTE | 12 | 1/2 H BLK IN | 101-26A |
| 101-23A HD | 13 | L:ID BLK OUT | 102-22B |
| 101-24B H:INPHASE OUT | 14 | DT V IN | 212-42 |
| 212-17, 102-23C, 111-5C L:Y DROPOUT IN | 15 | H:VIDEO EE (DEMOD) IN | 205-21B, 111-9C |
| 108-16A Y WRITE ZERO IN | 16 | GND | 108-16B |

C

| | | |
|---|---|---|
| GND | 1 | |
| +12V REG +12V IN | 2 | |
| +5V REG +5V IN | 3 | |
| +9V UNREG +9V IN | 4 | |
| —— | 5 | |
| 101-27C H CK(+) IN | 6 | |
| 101-28C H CK(-) IN | 7 | |
| 101-25A L:V DL IN | 8 | |
| 101-23C L:C CLAMP INH OUT | 9 | |
| 101-22C REF FIELD O/E IN | 10 | |
| 101-17A SV VD IN | 11 | |
| 101-25B H:J MODEL IN | 12 | |
| 102-22A L:C OFF OUT | 13 | |
| —— | 14 | |
| —— | 15 | |
| 111-6B, 108-16C BID LEVEL OUT | 16 | |

CN107

| A | | B | |
|---|---|---|---|
| 109-1A, 110-15C Y GATED H OUT | 1 | Y PB SYNC IN | 109-1B |
| 210-11A, 109-2A L:Y SDO OUT | 2 | TBC SWITCHING PULSE IN | 207-16C |
| 111-8B, 109-3A L:F BID OUT | 3 | L:Y DGB OUT | 109-3B |
| 109-4A DATA (G) | 4 | DATA (G) | 109-4B |
| 109-5A Y WRITE CK IN | 5 | GND | 109-5B |
| 109-6A Y-AD DATA $2^7$ IN | 6 | GND | 109-6B |
| 109-7A Y-AD DATA $2^6$ IN | 7 | GND | 109-7B |
| 109-8A Y-AD DATA $2^5$ IN | 8 | GND | 109-8B |
| 109-9A Y-AD DATA $2^4$ IN | 9 | GND | 109-9B |
| 102-26C H:SC BLK OUT | 10 | L:VISC INS OUT | 103-28B |
| 109-11A C-AD DATA $2^7$ IN | 11 | GND | 109-11B |
| 109-12A C-AD DATA $2^6$ IN | 12 | GND | 109-12B |
| 109-13A C-AD DATA $2^5$ IN | 13 | GND | 109-13B |
| 109-14A C-AD DATA $2^4$ IN | 14 | GND | 109-14B |
| 109-15A C WRITE CK IN | 15 | GND | 109-15B |
| 109-16A DATA (G) | 16 | DATA (G) | 109-16B |
| 210-11B, 109-17A L:C SDO OUT | 17 | L:C DGB OUT | 109-17B |
| 210-13A, 109-18A C GATED H OUT | 18 | C PB SYNC IN | 109-18B |
| 109-19A C WRITE ZERO IN | 19 | L:C DROPOUT (X) IN | 102-23A, 111-25C |
| 211-36 PB B-Y FP1 OUT | 20 | PB B-Y FP2 OUT | 211-37 |
| 212-37 H:COMB FILTER OFF IN | 21 | DL PB V OUT | 212-40 |
| 105-16C, 111-22A EDGE-P IN | 22 | EDGE-N IN | 111-22B, 105-16B |
| 101-17C L:DO INH OUT | 23 | L:CS DL OUT | 101-16A |
| 105-16A, 111-22C EDGE GND | 24 | GND | |
| TBC'D Y OUT (G) | 25 | TBC'D Y OUT (X) | 103-13C |
| GND | 26 | GND | |
| TBC'D B-Y OUT (G) | 27 | TBC'D B-Y OUT (X) | 102-11A |
| TBC'D R-Y OUT (G) | 28 | TBC'D R-Y OUT (X) | 102-12C |
| 123-21 CHROMA LEVEL CONTROL IN | 29 | GND | |
| -5V REG -5V IN | 30 | RFG -5V IN | -5V |
| -12V REG -12V IN | 31 | REG -12V IN | -12V |
| GND | 32 | GND | |

C

| | | |
|---|---|---|
| 212-14, 210-13B, 109-1C Y COUNT H IN | 1 | |
| 102-26A, 109-2C L:NO SIG OUT | 2 | |
| 109-3C GRY SWITCH CONTROL OUT | 3 | |
| 109-4C DATA (G) | 4 | |
| 109-5C VISC IN | 5 | |
| 109-6C Y-AD DATA $2^6$ IN | 6 | |
| 109-7C Y-AD DATA $2^4$ IN | 7 | |
| 109-8C Y-AD DATA $2^2$ IN | 8 | |
| 109-9C Y-AD DATA $2^0$ IN | 9 | |
| 102-25A, 109-10C L:VISC DET OUT | 10 | |
| 109-11C C-AD DATA $2^9$ IN | 11 | |
| 109-12C C-AD DATA $2^4$ IN | 12 | |
| 109-13C C-AD DATA $2^2$ IN | 13 | |
| 109-14C C-AD DATA $2^0$ IN | 14 | |
| 109-15C, 212-47, 103-12C L:VISC EXIST OUT | 15 | |
| 109-16C DATA (G) | 16 | |
| 109-17C L:C W CLAMP INH OUT | 17 | |
| 212-15, 109-18C C COUNT H IN | 18 | |
| 212-41 L:DET NG OUT | 19 | |
| 211-33 H:IN PHASE IN | 20 | |
| 211-29, 109-20B L:NOISELESS PB IN | 21 | |
| 111-5B, 212-34, 101-9B L:TBC CONFI MODE IN | 22 | |
| 212-46, 102-20C, 103-28C L:H SHIFT INH IN | 23 | |
| GND | 24 | |
| 103-13B TBC'D Y OUT (G) | 25 | |
| GND | 26 | |
| 102-11B TBC'D B-Y OUT (G) | 27 | |
| 102-12B TBC'D R-Y OUT (G) | 28 | |
| 123-23 VIDEO LEVEL CONTROL IN | 29 | |
| -5V REG -5V IN | 30 | |
| -12V REG -12V IN | 31 | |
| GND | 32 | |

| | | | | | | | |
|---|---|---|---|---|---|---|---|
| CP-103.501-20 | 20 | CHROMA CONTROL (EXT) OUT | 124-5 | | | | |
| CP-103.501-21 | 21 | CHROMA (INTERNAL) CONTROL OUT | 124-4 | | | | |
| CP-103.501-22 | 22 | VIDEO LEVEL CONTROL IN | 107-29C | RW-57.451-10 | 1 | SC PHASE CONTROL (EXT) IN | 123-10 |
| CP-103.501-24 | 23 | L:AUDIO MR IN | 211-10 | RW-57.451-12 | 2 | SYNC PHASE CONTROL (EXT) IN | 123-12 |
| CP-103.501-25 | 24 | L:AUDIO STEREO OUT | 212-43, 235-6A, 233-1 | RW-57.451-11 | 3 | H/VE CONTROL (EXT) IN | 123-14 |
| CP-103.501-26 | 25 | H:AUTO STEREO IN | 237-9A | RW-57.451-8 | 4 | SET UP CONTROL (EXT) IN | 123-18 |
| CP-103.501-27 | 26 | L:MONO/H:STEREO IN | | RW-57.451-7 | 5 | CHROMA CONTROL (EXT) IN | 123-20 |
| CP-103.501-28 | 27 | —— | | RW-57.451-9 | 6 | VIDEO CONTROL (EXT) IN | 123-22 |
| CP-103.501-29 | 28 | REG +5V OUT | +5V | RW-57.451-5 | 7 | REG +12V OUT | +12V |
| CP-103.501-30 | 29 | GND | | RW-57.451-4 | 8 | Y/C DELAY CONTROL (EXT) IN | 123-16 |
| | 30 | REG -5V OUT | -5V | RW-57.451-6 | 9 | REG -12V OUT | -12V |
| | | | | | 10 | —— | |

CN124

CN128

| | | | |
|---|---|---|---|
| CN PANEL 019-2 | 1A | DUB Y OUT (G) | 111-2B |
| CN PANEL 019-8 | 2A | DUB R-Y/B-Y OUT (G) | 111-28B |
| CN PANEL 019-1 | 1B | DUB Y OUT (X) | 111-2C |
| CN PANEL 019-7 | 2B | DUB R-Y/B-Y OUT (X) | 111-28C |

CN126

| | | | |
|---|---|---|---|
| CN PANEL 015-X | 1 | VIDEO OUT 1 (X) | 103-9A |
| CN PANEL 015-8 | 2 | VIDEO OUT 1 (G) | 103-8B |
| CN PANEL 016-X | 3 | VIDEO OUT 2 (X) | 103-9C |
| CN PANEL 016-8 | 4 | VIDEO OUT 2 (G) | 103-9B |
| CN PANEL 017-X | 5 | VIDEO OUT 3 (X) | 103-10A |
| CN PANEL 017-8 | 6 | VIDEO OUT 3 (G) | 103-10B |

**MB-191C(1/4)**
**1-624-047-12, 13**
**BVW-60P**

16-335 (b)

16-336 (b)

I J K L M N O P

MB-191C (2/4) MB-191

# MB-191C (2/4) ; MOTHER BOARD

## TBC-7P

CN108

| A | | B | |
|---|---|---|---|
| GND | 1 | GND | +12V |
| REG +12V IN | 2 | REG +12V IN | +5V |
| REG +5V IN | 3 | REG +5V IN | +9V |
| UNREG +9V IN | 4 | UNREG +9V IN | |
| GND | 5 | GND | |
| GND | 6 | GND | |
| GND | 7 | GND | |
| 111-1B DEMOD Y IN (G) | 8 | DEMOD Y IN OO | 111-1C |
| GND | 9 | GND | |
| GND | 10 | Y-IMPACT ERROR OUT OO | 131-1 |
| GND | 11 | GND | |
| GND | 12 | Y-IMPACT ERROR IN OO | 131-3 |
| 206-22A ANALOG TAPE SPEED IN | 13 | H:FAST SPEED DET IN | 206-10B, 111-7B |
| 111-11B, 211-23 H:F.FWD MODE IN | 14 | ——— | |
| GND | 15 | GND | |
| 106-16A Y WRITE ZERO OUT | 16 | GND | 106-16B |

| C | |
|---|---|
| GND | 1 |
| REG +12V IN | 2 |
| REG +5V IN | 3 |
| UNREG +9V IN | 4 |
| GND | 5 |
| GND | 6 |
| GND | 7 |
| 111-2A DEMOD Y IN (G) | 8 |
| GND | 9 |
| 131-2 Y-IMPACT ERROR OUT (G) | 10 |
| GND | 11 |
| 131-4 Y-IMPACT ERROR IN (G) | 12 |
| 103-26C SCH TRACKING IN | 13 |
| 111-10B, 211-24 H:REW MODE IN | 14 |
| GND | 15 |
| 111-6B, 106-16C BID LEVEL IN | 16 |

CN109

| A | | B | |
|---|---|---|---|
| 101-15C, 107-1A Y GATED H IN | 1 | Y PB SYNC OUT | 107-1B |
| 107-2A L:Y SDO IN | 2 | TAPE DIRECTION IN | 208-16A, 111-7A, 211-8 |
| 111-8B, 107-3A L:Y BID IN | 3 | L:Y DGB IN | 107-3B |
| 107-4A DATA (G) | 4 | DATA (G) | 107-4B |
| 107-5A Y WRITE CK OUT | 5 | GND | 107-5B |
| 107-6A Y-AD DATA $2^7$ OUT | 6 | GND | 107-6B |
| 107-7A Y-AD DATA $2^6$ OUT | 7 | GND | 107-7B |
| 107-8A Y-AD DATA $2^5$ OUT | 8 | GND | 107-8B |
| 107-9A Y-AD DATA $2^4$ OUT | 9 | GND | 107-9B |
| 212-39 L:Y IMPACT ERROR INH OUT | 10 | L:C IMPACT ERROR INH OUT | 212-4B |
| 107-11A C-AD DATA $2^7$ OUT | 11 | GND | 107-11B |
| 107-12A C-AD DATA $2^6$ OUT | 12 | GND | 107-12B |
| 107-13A C-AD DATA $2^5$ OUT | 13 | GND | 107-13B |
| 107-14A C-AD DATA $2^4$ OUT | 14 | GND | 107-14B |
| 107-15A C WRITE CK OUT | 15 | GND | 107-15B |
| 107-16A DATA (G) | 16 | DATA (G) | 107-16B |
| 107-17A L:C SDO IN | 17 | L:C DGB IN | 107-17B |
| 107-18A C GATED H IN | 18 | C PB SYNC OUT | 107-18B |
| 107-19A C WRITE ZERO OUT | 19 | GND | |
| NC | 20 | L:NOISELESS PB IN | 107-21C, 211-29 |
| GND | 21 | GND | |
| GND | 22 | C-IMPACT ERROR OUT OO | 131-5 |
| GND | 23 | GND | |
| GND | 24 | C-IMPACT ERROR IN OO | 131-7 |
| GND | 25 | GND | |
| 111-27B DEMOD C IN (G) | 26 | DEMOD C IN OO | 111-27C |
| GND | 27 | GND | |
| GND | 28 | GND | |
| GND | 29 | GND | |
| -5V REG -5V IN | 30 | REG -5V IN | -5V |
| -12V REG -12V IN | 31 | REG -12V IN | -12V |
| GND | 32 | GND | |

| C | | |
|---|---|---|
| 212-14, 107-1C | Y COUNT H OUT | 1 |
| 102-26A, 107-2C | L:NO SIG IN | 2 |
| 107-3C | GRY SWITCH CONTROL IN | 3 |
| 107-4C | DATA (G) | 4 |
| 107-5C | VISC OUT | 5 |
| 107-6C | Y-AD DATA $2^6$ OUT | 6 |
| 107-7C | Y-AD DATA $2^4$ OUT | 7 |
| 107-8C | Y-AD DATA $2^2$ OUT | 8 |
| 107-9C | Y-AD DATA $2^0$ OUT | 9 |
| 102-25A, 107-10C | L:VISC DET IN | 10 |
| 107-11C | C-AD DATA $2^6$ OUT | 11 |
| 107-12C | C-AD DATA $2^4$ OUT | 12 |
| 107-13C | C-AD DATA $2^2$ OUT | 13 |
| 107-14C | C-AD DATA $2^0$ OUT | 14 |
| 212-47, 107-15C | L:VISC EXIST IN | 15 |
| 107-16C | DATA (G) | 16 |
| 107-17C | L:C W CLAMP INH IN | 17 |
| 212-15, 107-18C | C COUNT H OUT | 18 |
| 123-17 | Y/C DELAY CONTROL IN | 19 |
| 205-14A, 208-20C, 202-27C, 211-26, 111-11C | L:METAL/H:OXIDE IN | 20 |
| GND | | 21 |
| 131-6 | C-IMPACT ERROR OUT (G) | 22 |
| GND | | 23 |
| 131-8 | C-IMPACT ERROR IN (G) | 24 |
| GND | | 25 |
| 111-28A | DEMOD C IN (G) | 26 |
| GND | | 27 |
| GND | | 28 |
| GND | | 29 |
| -5V REG -5V IN | | 30 |
| -12V REG -12V IN | | 31 |
| GND | | 32 |

CN110

| A | | B | |
|---|---|---|---|
| GND | 1 | GND | 212-16 |
| REG +12V IN | 2 | REG +12V IN | 136-2, |
| REG +5V IN | 3 | REG +5V IN | |
| UNREG +9V IN | 4 | UNREG +9V IN | |
| ——— | 5 | ——— | |
| ——— | 6 | Y RF CH-A IN (G) | 114-3 |
| ——— | 7 | ——— | 211-8, 109-2 |
| ——— | 8 | CH-A SYNC REF OUT (G) | 210-21B |
| ——— | 9 | ——— | |
| ——— | 10 | Y RF CH-B IN (G) | 115-3 |
| ——— | 11 | ——— | |
| ——— | 12 | CH-B SYNC REF OUT (G) | 210-20B |
| ——— | 13 | ——— | |
| ——— | 14 | ——— | |
| ——— | 15 | Y GATED H IN (G) | |
| ——— | 16 | ——— | |

| C | | |
|---|---|---|
| GND | 1 | |
| REG +12V IN | 2 | |
| REG +5V IN | 3 | |
| UNREG +9V IN | 4 | |
| ——— | 5 | |
| 114-2 Y RF CH-A IN OO | 6 | 105-1 |
| ——— | 7 | |
| 210-21A CH-A SYNC REF OUT OO | 8 | |
| ——— | 9 | |
| 115-2 Y RF CH-B IN OO | 10 | 211-2 |
| ——— | 11 | |
| 210-20A CH-B SYNC REF OUT OO | 12 | |
| ——— | 13 | |
| 207-19A Y SWITCHING PULSE IN | 14 | |
| 109-1A, 107-1A Y GATED H IN OO | 15 | |
| ——— | 16 | |

212-17, 106-1

211-2
205-2

109-20C, 202-27C, 204-28B, 205-14A, 208

207-19B, 202-2

105-1

107-1

CN129

| | | | |
|---|---|---|---|
| SR-26, 662-1 | 1 | REG +12V OUT | +12V |
| SR-26, 662-2 | 2 | GND | |

CN130

| | | | |
|---|---|---|---|
| SW-144, 512-9 | 1 | SCH OUT | 102-21A |
| | 2 | ——— | |
| | 3 | ——— | |
| SW-144, 512-3 | 4 | ——— | |
| | 5 | RF METER OUT | 111-5A |
| | 6 | ——— | |
| SW-144, 512-6 | 7 | ——— | +12V |
| SW-144, 512-5 | 8 | REG +12V OUT | |
| SW-144, 512-4 | 9 | GND | |
| SW-144, 511-3 | 10 | REG -12V OUT | -12V |
| SW-144, 511-2 | 11 | H:WDW SEL CH1/3 IN | 237-14A |
| SW-144, 511-1 | 12 | H:WDW SEL STEREO IN | 237-14B |
| | 13 | H:WDW SEL CH2/4 IN | 237-15A |

CN131

| | | | |
|---|---|---|---|
| VQ-192, 317-1 | 1 | Y-IMPACT ERROR OUT OO | 108-10B |
| VQ-192, 317-2 | 2 | Y-IMPACT ERROR OUT (G) | 108-10C |
| VQ-192, 317-5 | 3 | Y-IMPACT ERROR IN OO | 108-12B |
| VQ-192, 317-6 | 4 | Y-IMPACT ERROR IN (G) | 108-12C |
| VQ-192, 317-3 | 5 | C-IMPACT ERROR OUT OO | 109-22B |
| VQ-192, 317-4 | 6 | C-IMPACT ERROR OUT (G) | 109-22C |
| VQ-192, 317-7 | 7 | C-IMPACT ERROR IN OO | 109-24B |
| VQ-192, 317-8 | 8 | C-IMPACT ERROR IN (G) | 109-24C |

CN132

| | | | |
|---|---|---|---|
| BF-28, 533-4 | 1 | ——— | |
| BF-28, 533-1 | 2 | REG +12V OUT | +12V |
| BF-28, 533-5 | 3 | REG +5V OUT | +5V |
| BF-28, 533-3 | 4 | GND | |
| BF-28, 533-2 | 5 | REG -12V OUT | -12V |

CN136

| | | | |
|---|---|---|---|
| | 1 | ——— | 102-15C, 111-3A |
| CN PANEL, 019-11 | 2 | L:CTDW IN | |

CN138

| | | | |
|---|---|---|---|
| CN PANEL, 029-X | 1 | CAV Y OUT OO | 103-7C |
| CN PANEL, 029-6 | 2 | CAV Y OUT (G) | 103-7B |

CN139

| | | | |
|---|---|---|---|
| CN PANEL, 030-X | 1 | CAV R-Y OUT OO | 102-9C |
| CN PANEL, 030-6 | 2 | CAV R-Y OUT (G) | 102-9B |
| CN PANEL, 031-X | 3 | CAV B-Y OUT OO | 102-8A |
| CN PANEL, 031-6 | 4 | CAV B-Y OUT (G) | 102-8B |

CN137

| | | | |
|---|---|---|---|
| CP-101, 441-3 | 1A | REF VIDEO IN OO | 101-5B |
| CP-101, 441-5 | 2A | DUB REF VIDEO IN OO | 101-6B |
| | 3A | ——— | |
| CN PANEL, 019-5 | 4A | DUB B-Y/C DO OUT OO | 102-6A |
| CN PANEL, 019-3 | 5A | DUB R-Y/Y DO OUT OO | 102-7C |
| CN PANEL, 014-2 | 6A | TV VIDEO OUT OO | 103-11C |
| | 7A | ——— | |
| CP-101, 442-3 | 8A | GND | +12V |
| CP-101, 441-4 | 1B | REF VIDEO IN (G) | 101-5C |
| CP-101, 441-6 | 2B | DUB REF VIDEO IN (G) | 101-6C |
| | 3B | ——— | |
| CN PANEL, 019-6 | 4B | DUB B-Y/C DO OUT (G) | 102-6B |
| CN PANEL, 019-4 | 5B | DUB R-Y/Y DO OUT (G) | 102-7B |
| CN PANEL, 014-6 | 6B | TV VIDEO OUT (G) | 103-11B |
| CP-101, 442-2 | 7B | REG +5V OUT | +5V |
| CP-101, 442-2 | 8B | REG -5V OUT | -5V |

UNREG +9V

| | | | |
|---|---|---|---|
| SW-B REG 431-1 | 1 | UNREG +9V IN | |
| SW-B REG 431-2 | 2 | UNREG GND | |
| SW-B REG 431-3 | 3 | UNREG GND | |
| SW-B REG 431-4 | 4 | UNREG GND | |

16-340

16-341

## DM-56P

CM109

| | A | | B | |
|---|---|---|---|---|
| 07- | Y GATED H IN | 1 | Y PB SYNC OUT | 107-1B |
| 07-2 | L:Y SDO IN | 2 | TAPE DIRECTION IN | 208-16A, 111-7A, 211-8 |
| 07-3 | L:F BID IN | 3 | L:Y DGB IN | 107-3B |
| 07-4A | DATA (G) | 4 | DATA (G) | 107-4B |
| 07-5A | Y WRITE CK OUT | 5 | GND | 107-5B |
| 07-6 | Y-AD DATA $2^7$OUT | 6 | GND | 107-6B |
| 07-7 | Y-AD DATA $2^6$OUT | 7 | GND | 107-7B |
| 07-8 | Y-AD DATA $2^5$OUT | 8 | GND | 107-8B |
| 07-9 | Y-AD DATA $2^4$OUT | 9 | GND | 107-9B |
| 12-39 | L:Y IMPACT ERROR INH OUT | 10 | L:C IMPACT ERROR INH OUT | 212-4B |
| 07-11A | C-AD DATA $2^7$OUT | 11 | GND | 107-11B |
| 07-12A | C-AD DATA $2^6$OUT | 12 | GND | 107-12B |
| 07-13 | C-AD DATA $2^5$OUT | 13 | GND | 107-13B |
| 07-14 | C-AD DATA $2^4$OUT | 14 | GND | 107-14B |
| 07-15 | C WRITE CK OUT | 15 | GND | 107-15B |
| 07-16A | DATA (G) | 16 | DATA (G) | 107-16B |
| 07-17A | L:C SDO IN | 17 | L:C DGB IN | 107-17B |
| 07-18A | C GATED H IN | 18 | C PB SYNC OUT | 107-18B |
| 07-19 | C WRITE ZERO OUT | 19 | GND | |
| | NC | 20 | L:NOISELESS PB IN | 107-21C, 211-29 |
| | GND | 21 | GND | |
| | GND | 22 | C-IMPACT ERROR OUT (X) | 131-5 |
| | GND | 23 | GND | |
| | GND | 24 | C-IMPACT ERROR IN (X) | 131-7 |
| | GND | 25 | GND | |
| 1-27 | DEMOD C IN (G) | 26 | DEMOD C IN (X) | 111-27C |
| | GND | 27 | GND | |
| | GND | 28 | GND | |
| | GND | 29 | GND | |
| | REG -5V IN | 30 | REG -5V IN | -5V |
| | REG -12V IN | 31 | REG -12V IN | -12V |
| | GND | 32 | GND | |

C

| | | |
|---|---|---|
| -1C | COUNT H OUT | 1 |
| 7-2C | L:NO SIG IN | 2 |
| 7-3C | GRY SWITCH CONTROL IN | 3 |
| 7-4C | DATA (G) | 4 |
| 7-5C | ISC OUT | 5 |
| 7-6C | -AD DATA $2^5$OUT | 6 |
| 7-7C | -AD DATA $2^4$OUT | 7 |
| 7-8C | Y-AD DATA $2^3$OUT | 8 |
| 7-9C | Y-AD DATA $2^2$OUT | 9 |
| -10C | :VISC DET IN | 10 |
| -11C | -AD DATA $2^3$OUT | 11 |
| -12C | -AD DATA $2^2$OUT | 12 |
| -13C | -AD DATA $2^1$OUT | 13 |
| -14C | C-AD DATA $2^0$OUT | 14 |
| 15C | L:VISC EXIST IN | 15 |
| -16C | DATA (G) | 16 |
| -17C | :C W CLAMP INH IN | 17 |
| -18C | COUNT H OUT | 18 |
| -17 | C DELAY CONTROL IN | 19 |
| 11C | L:METAL/H:OXIDE IN | 20 |
| | GND | 21 |
| -6 | C-IMPACT ERROR OUT (G) | 22 |
| | (D | 23 |
| -8 | -IMPACT ERROR IN (G) | 24 |
| | (D | 25 |
| -28A | DEMOD C IN (G) | 26 |
| | GND | 27 |
| | GND | 28 |
| | (D | 29 |
| | (G -5V IN | 30 |
| | (G -12V IN | 31 |
| | GND | 32 |

CM110

| | A | | B | |
|---|---|---|---|---|
| | GND | 1 | GND | |
| +12V | REG +12V IN | 2 | REG +12V IN | +12V |
| +5V | REG +5V IN | 3 | REG +5V IN | +5V |
| +9V | UNREG +9V IN | 4 | UNREG +9V IN | +9V |
| | | 5 | | |
| | | 6 | Y RF CH-A IN (G) | 114-3 |
| | | 7 | | |
| | | 8 | CH-A SYNC REF OUT (G) | 210-21B |
| | | 9 | | |
| | | 10 | Y RF CH-B IN (G) | 115-3 |
| | | 11 | | |
| | | 12 | CH-B SYNC REF OUT (G) | 210-20B |
| | | 13 | | |
| | | 14 | | |
| | | 15 | Y GATED H IN (G) | |
| | | 16 | | |

C

| | | |
|---|---|---|
| | GND | 1 |
| +12V | REG +12V IN | 2 |
| +5V | REG +5V IN | 3 |
| +9V | UNREG +9V IN | 4 |
| | | 5 |
| 114-2 | Y RF CH-A IN (X) | 6 |
| | | 7 |
| 210-21A | CH-A SYNC REF OUT (X) | 8 |
| | | 9 |
| 115-2 | Y RF CH-B IN (X) | 10 |
| | | 11 |
| 210-20A | CH-B SYNC REF OUT (X) | 12 |
| | | 13 |
| 207-19A | Y SWITCHING PULSE IN | 14 |
| 109-1A, 107-1A | Y GATED H IN (X) | 15 |
| | | 16 |

CM111

| | A | | B | |
|---|---|---|---|---|
| 212-16, 207-6A | VIDEO WITH VITC OUT | 1 | DEMOD Y OUT (G) | 108-8A |
| 108-8C | DEMOD Y OUT (G) | 2 | DUB Y OUT (G) | 125-3A |
| 136-2, 102-15C | L:CTDM IN | 3 | COMPONENT Y IN (G) | 103-6B |
| | | 4 | SUB DEMOD Y OUT (G) | 105-27B |
| 130-5 | RF METER OUT | 5 | L:TBC CONFI MODE IN | 101-9B, 107-22C, 212-34 |
| | | 6 | BID LEVEL IN | 106-16C, 108-16C |
| 211-6, 109-2B, 208-11A | TAPE DIRECTION IN | 7 | H:FAST SPEED DET IN | 206-10B, 108-13B |
| | | 8 | L:F BID IN | 107-3A, 109-3A |
| | | 9 | NC | |
| | | 10 | H:REW MODE IN | 211-24, 108-14C |
| | | 11 | H:F.FWD MODE IN | 211-23, 108-14A |
| | | 12 | | |
| | | 13 | | |
| | | 14 | | |
| | | 15 | C RF CH-A IN (G) | 116-2 |
| | | 16 | | |
| | | 17 | C RF CH-A OUT (G) | 103-19B |
| | | 18 | | |
| | | 19 | C RF CH-B IN (G) | 117-3 |
| | | 20 | | |
| | | 21 | C RF CH-B OUT (G) | 103-20B |
| 105-16C, 107-22A | EDGE-P IN | 22 | EDGE-N IN | 107-22B, 105-16B |
| | | 23 | | |
| | | 24 | | |
| | | 25 | C DROPOUT OUT (G) | |
| | | 26 | | |
| 211-25, 102-26B | H:CHROMA MUTE IN | 27 | DEMOD C OUT (G) | 109-26A |
| 109-26C | DEMOD C OUT (G) | 28 | DUB R-Y/B-Y OUT (G) | 125-4A |
| | | 29 | | |
| -5V | REG -5V IN | 30 | REG -5V IN | -5V |
| -12V | REG -12V IN | 31 | REG -12V IN | -12V |
| | GND | 32 | GND | |

C

| | | |
|---|---|---|
| 108-8B | DEMOD Y OUT (X) | 1 |
| 125-3B | DUB Y OUT (X) | 2 |
| 103-6A | COMPONENT Y IN (X) | 3 |
| 105-27C | SUB DEMOD Y OUT (X) | 4 |
| 212-17, 106-15A, 102-23C | L:Y DROPOUT OUT | 5 |
| | | 6 |
| | | 7 |
| 211-27, 129-4 | L:DT HEAD/H:RP HEAD IN | 8 |
| 205-21B, 106-15B | H:VIDEO EE (DEMOD) IN | 9 |
| 205-14C | L:COMPOSITE DT IN | 10 |
| 109-20C, 202-27C, 204-28B, 205-14A, 208-20C, 211-26 | L:METAL/H:OXIDE IN | 11 |
| | | 12 |
| 207-19B, 202-28C, 103-27C | C SWITCHING PULSE IN | 13 |
| | | 14 |
| 116-3 | C DT RF CH-A IN (X) | 15 |
| | | 16 |
| 103-19C | C RF CH-A OUT (X) | 17 |
| | | 18 |
| 117-2 | C DT RF CH-B IN (X) | 19 |
| | | 20 |
| 103-20C | C RF CH-B OUT (X) | 21 |
| 105-16A, 107-24A | EDGE GND | 22 |
| | | 23 |
| | | 24 |
| 107-19B, 102-23A | C DROP OUT OUT (X) | 25 |
| | | 26 |
| 109-26B | DEMOD C OUT (X) | 27 |
| 125-4B | DUB R-Y/B-Y OUT (X) | 28 |
| | | 29 |
| -5V | REG -5V IN | 30 |
| -12V | REG -12V IN | 31 |
| | GND | 32 |

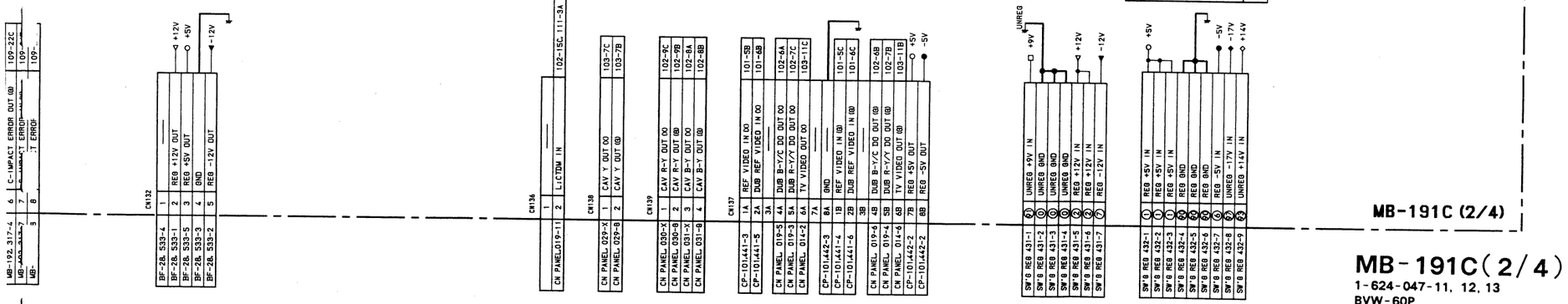


MB-191C (2/4)

**MB-191C (2/4)**
1-624-047-11, 12, 13
BVW-60P

MB-191C (3/4) MB-191

# MB-191C (3/4) ; MOTHER BOARD

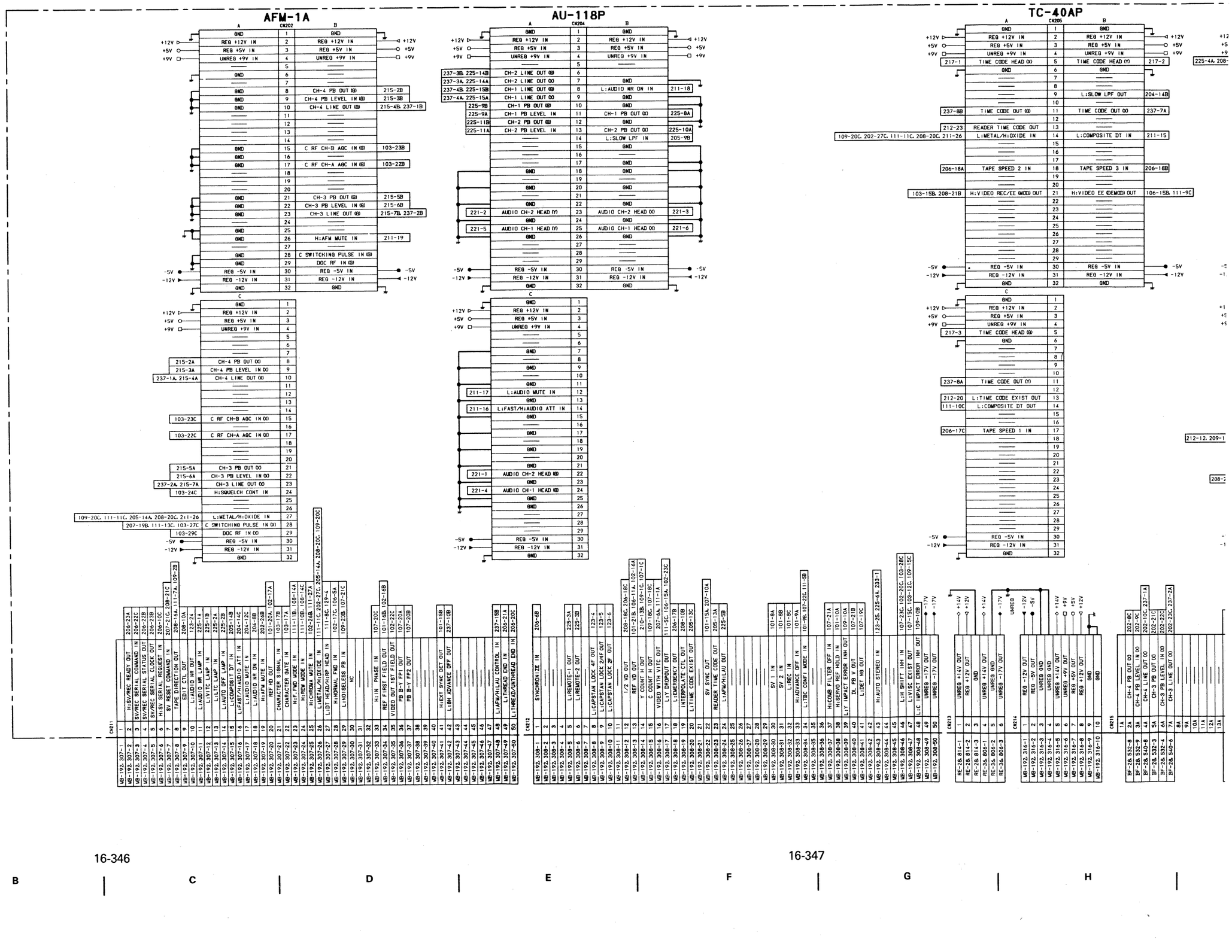

## AU-118P

CN204

| | A | | B | |
|---|---|---|---|---|
| | GND | 1 | GND | |
| +12V | REG +12V IN | 2 | REG +12V IN | +12V |
| +5V | REG +5V IN | 3 | REG +5V IN | +5V |
| +9V | UNREG +9V IN | 4 | UNREG +9V IN | +9V |
| | —— | 5 | | |
| 225-14B | CH-2 LINE OUT (G) | 6 | | |
| 225-14A | CH-2 LINE OUT (O) | 7 | GND | |
| 225-15B | CH-1 LINE OUT (G) | 8 | L:AUDIO NR ON IN | 211-18 |
| 225-15A | CH-1 LINE OUT (O) | 9 | GND | |
| 225-9B | CH-1 PB OUT (G) | 10 | GND | |
| 225-9A | CH-1 PB LEVEL IN | 11 | CH-1 PB OUT (O) | 225-8A |
| 225-11B | CH-2 PB OUT (G) | 12 | GND | |
| 225-11A | CH-2 PB LEVEL IN | 13 | CH-2 PB OUT (O) | 225-10A |
| | —— | 14 | L:SLOW LPF IN | 205-9B |
| | —— | 15 | GND | |
| | —— | 16 | —— | |
| | —— | 17 | GND | |
| GND | —— | 18 | GND | |
| | —— | 19 | —— | |
| GND | —— | 20 | GND | |
| | —— | 21 | —— | |
| GND | —— | 22 | GND | |
| 221-2 | AUDIO CH-2 HEAD (Y) | 23 | AUDIO CH-2 HEAD (O) | 221-3 |
| GND | —— | 24 | GND | |
| 221-5 | AUDIO CH-1 HEAD (Y) | 25 | AUDIO CH-1 HEAD (O) | 221-6 |
| GND | —— | 26 | GND | |
| | —— | 27 | —— | |
| | —— | 28 | —— | |
| | —— | 29 | —— | |
| | REG -5V IN | 30 | REG -5V IN | -5V |
| | REG -12V IN | 31 | REG -12V IN | -12V |
| | GND | 32 | GND | |

| | C | |
|---|---|---|
| | GND | 1 |
| +12V | REG +12V IN | 2 |
| | REG +5V IN | 3 |
| | UNREG +9V IN | 4 |
| | —— | 5 |
| | —— | 6 |
| | GND | 7 |
| | —— | 8 |
| | GND | 9 |
| | —— | 10 |
| | GND | 11 |
| 211-17 | L:AUDIO MUTE IN | 12 |
| | GND | 13 |
| 211-16 | L:FAST/H:AUDIO ATT IN | 14 |
| | GND | 15 |
| | —— | 16 |
| GND | —— | 17 |
| | —— | 18 |
| | GND | 19 |
| | —— | 20 |
| | GND | 21 |
| 221-1 | AUDIO CH-2 HEAD (G) | 22 |
| | GND | 23 |
| 221-4 | AUDIO CH-1 HEAD (G) | 24 |
| | GND | 25 |
| | —— | 26 |
| | —— | 27 |
| | —— | 28 |
| | —— | 29 |
| | REG -5V IN | 30 |
| | REG -12V IN | 31 |
| | GND | 32 |

## TC-40AP

CN205

| | A | | B | |
|---|---|---|---|---|
| | GND | 1 | GND | |
| +12V | REG +12V IN | 2 | REG +12V IN | +12V |
| +5V | REG +5V IN | 3 | REG +5V IN | +5V |
| +9V | UNREG +9V IN | 4 | UNREG +9V IN | +9V |
| 217-1 | TIME CODE HEAD (O) | 5 | TIME CODE HEAD (Y) | 217-2 |
| | GND | 6 | GND | |
| | —— | 7 | —— | |
| | —— | 8 | —— | |
| | —— | 9 | L:SLOW LPF OUT | 204-14B |
| | —— | 10 | —— | |
| 237-8B | TIME CODE OUT (G) | 11 | TIME CODE OUT (O) | 237-7A |
| | —— | 12 | —— | |
| 212-23 | READER TIME CODE OUT | 13 | —— | |
| 109-20C, 202-27C, 111-11C, 208-20C, 211-26 | L:METAL/H:OXIDE IN | 14 | L:COMPOSITE DT IN | 211-15 |
| | —— | 15 | —— | |
| | —— | 16 | —— | |
| | —— | 17 | —— | |
| 206-18A | TAPE SPEED 2 IN | 18 | TAPE SPEED 3 IN | 206-18B |
| | —— | 19 | —— | |
| | —— | 20 | —— | |
| 103-15B, 208-21B | H:VIDEO REC/EE (MOD) OUT | 21 | H:VIDEO EE (DEMOD) OUT | 106-15B, 111-9C |
| | —— | 22 | —— | |
| | —— | 23 | —— | |
| | —— | 24 | —— | |
| | —— | 25 | —— | |
| | —— | 26 | —— | |
| | —— | 27 | —— | |
| | —— | 28 | —— | |
| | —— | 29 | —— | |
| -5V | REG -5V IN | 30 | REG -5V IN | -5V |
| -12V | REG -12V IN | 31 | REG -12V IN | -12V |
| | GND | 32 | GND | |

| | C | |
|---|---|---|
| | GND | 1 |
| +12V | REG +12V IN | 2 |
| +5V | REG +5V IN | 3 |
| +9V | UNREG +9V IN | 4 |
| 217-3 | TIME CODE HEAD (G) | 5 |
| | GND | 6 |
| | —— | 7 |
| | —— | 8 |
| | —— | 9 |
| | —— | 10 |
| 237-8A | TIME CODE OUT (Y) | 11 |
| | —— | 12 |
| 212-20 | L:TIME CODE EXIST OUT | 13 |
| 111-10C | L:COMPOSITE DT OUT | 14 |
| | —— | 15 |
| | —— | 16 |
| 206-17C | TAPE SPEED 1 IN | 17 |
| | —— | 18 |
| | —— | 19 |
| | —— | 20 |
| | —— | 21 |
| | —— | 22 |
| | —— | 23 |
| | —— | 24 |
| | —— | 25 |
| | —— | 26 |
| | —— | 27 |
| | —— | 28 |
| | —— | 29 |
| -5V | REG -5V IN | 30 |
| -12V | REG -12V IN | 31 |
| | GND | 32 |

## SV-82A

CN206

| | A | | B | |
|---|---|---|---|---|
| | GND | 1 | GND | |
| +12V | REG +12V IN | 2 | REG +12V IN | +12V |
| +5V | REG +5V IN | 3 | REG +5V IN | +5V |
| +9V | UNREG +9V IN | 4 | UNREG +9V IN | +9V |
| 225-4A, 208-5A, 207-5A | V REF OUT | 5 | 1/2V REF OUT | 207-5B, 208-5B |
| | —— | 6 | SYNCHRONIZE IN | 212-1 |
| 207-7A | S-REEL SHAPED FG (A) IN | 7 | S-REEL 4FG IN | 207-7B |
| 226-12 | L:LOADING MUTE OUT | 8 | T-REEL 4FG IN | 207-8B |
| 207-9A | REF VD IN | 9 | PB VD IN | 207-9B |
| 226-5 | LOADING DIRECTION OUT | 10 | H:FAST SPEED DET OUT | 111-7B, 108-13B |
| 208-11A | SWITCHED CTL IN | 11 | CAPSTAN FWD/REV IN | 207-11B, 208-11B, 229-4 |
| 208-12A | D/A 0 OUT | 12 | D/A 1 OUT | 208-12B |
| 207-13A | D/A 3 OUT | 13 | D/A 4 OUT | 207-13B |
| 207-13C | PG SW PULSE EDGE IN | 14 | S-REEL PWM OUT | 207-14B |
| 208-16B | STOP SERVO FG (G) IN | 15 | L:SMALL/H:LARGE OUT | 207-15B |
| 207-16A | L:T CW OUT | 16 | SWITCHED PG SW PULSE IN | 207-16B, 208-17C |
| 207-17B | DELAYED PG SW PULSE OUT | 17 | L:EMERGENCY OUT | 212-18 |
| 205-18A | TAPE SPEED 2 OUT | 18 | TAPE SPEED 3 OUT | 205-18B |
| | —— | 19 | —— | |
| | —— | 20 | —— | |
| 211-49 | L:THREAD END IN | 21 | TAPE TENSION 1 IN | 207-22C |
| 108-13A | ANALOG TAPE SPEED OUT | 22 | SV/REC SERIAL STATUS OUT | 211-4 |
| 211-2 | H:SV/REC READY OUT | 23 | SV/REC SERIAL CLOCK OUT | 211-5 |
| 208-23C | CAPSTAN FWD/REV DET IN | 24 | CAPSTAN SHAPED FG (A) IN | 208-24A |
| 208-25A | D0 IN/OUT | 25 | D1 IN/OUT | 208-25B |
| 208-26A | D3 IN/OUT | 26 | D4 IN/OUT | 208-26B |
| 208-27A | D6 IN/OUT | 27 | D7 IN/OUT | 208-27B |
| 208-28A | A1 OUT | 28 | A2 OUT | 208-28B |
| 208-29A | L:RD OUT | 29 | L:WR OUT | 208-29B |
| -5V | REG -5V IN | 30 | REG -5V IN | -5V |
| -12V | REG -12V IN | 31 | REG -12V IN | -12V |
| | GND | 32 | GND | |

| | C | |
|---|---|---|
| | GND | 1 |
| +12V | REG +12V | 2 |
| +5V | REG +5V | 3 |
| +9V | UNREG +9V | 4 |
| | —— | 5 |
| | —— | 6 |
| 207-7C | S-REEL REV/FWD DET IN | 7 |
| 207-8C | T-REEL REV/FWD DET IN | 8 |
| 226-6 | LOADING SPEED OUT | 9 |
| 211-6 | H:SV SERIAL REQUEST IN | 10 |
| | —— | 11 |
| 208-12C | D/A 2 OUT | 12 |
| 230-1 | H:REEL POWER ON OUT | 13 |
| 207-14C | T-REEL PWM OUT | 14 |
| 207-15C | L:S CCW OUT | 15 |
| 226-7 | LOADING FG IN | 16 |
| 205-17C | TAPE SPEED 1 OUT | 17 |
| 212-12, 209-10A, 208-18C | 1/2 VD OUT | 18 |
| | —— | 19 |
| 211-50 | L:THREAD/UNTHREAD END IN | 20 |
| 207-23A | TAPE TENSION 2 IN | 21 |
| 211-3 | SV/REC SERIAL COMMAND IN | 22 |
| 208-23B, 207-24C | SV CLOCK OUT | 23 |
| 208-24C | CAPSTAN 4FG IN | 24 |
| 208-25C | D2 IN/OUT | 25 |
| 208-26C | D5 IN/OUT | 26 |
| 208-27C | A0 OUT | 27 |
| 208-28C | L:CS OUT | 28 |
| 208-29C | SERVO RESET OUT | 29 |
| -5V | REG -5V IN | 30 |
| -12V | REG -12V IN | 31 |
| | GND | 32 |



**MB-191C(3/4)**
1-624-047-11, 12, 13
BVW-60P

MB-191C (4/4) MB-191

# MB-191C (4/4); MOTHER BOARD

## SV-83B

CN207

| A | | | B | |
|---|---|---|---|---|
| | GND | 1 | GND | |
| +12V | REG +12V IN | 2 | REG +12V IN | +12V |
| +5V | REG +5V IN | 3 | REG +5V IN | +5V |
| +9V | UNREG +9V IN | 4 | UNREG +9V IN | +9V |
| 225-4A, 208-5A, 206-5A | V REF IN | 5 | 1/2 V REF IN | 206-5B, 208-5B |
| 212-16, 111-1A | VIDEO WITH VITC IN | 6 | — | |
| 206-7A | S-REEL SHAPED FG (A) OUT | 7 | S-REEL 4FG OUT | 206-7B |
| | T-REEL SHAPED FG (A) OUT | 8 | T-REEL 4FG OUT | 206-8B |
| 206-9A | REF VD OUT | 9 | PB VD OUT | 206-9B |
| 212-22, 101-15A | SV SYNC IN | 10 | INCOME/EXT IN | 208-19C |
| | — | 11 | CAPSTAN FWD/REV IN | 206-11B, 208-11B, 229-4 |
| 208-14C | DRUM SHAPED PHASE PG IN | 12 | DRUM SHAPED PG (A) IN | 208-15A |
| 206-13A | D/A 3 IN | 13 | D/A 4 IN | 206-13B |
| | — | 14 | S-REEL PWM IN | 206-14B |
| | — | 15 | L:SMALL/H:LARGE IN | 206-15B |
| 206-16A | L:T CW IN | 16 | SWITCHED PG SW PULSE OUT | 206-16B, 208-17C |
| | — | 17 | DELAYED PG SW PULSE IN | 206-17A |
| 208-18A | H:NORMAL SW POSITION IN | 18 | — | |
| 110-14C | Y SWITCHING PULSE OUT | 19 | C SWITCHING PULSE OUT | 103-27C, 111-13C, 202-28C |
| 230-5 | S-REEL FG-1 IN | 20 | S-REEL FG-2 IN | 230-4 |
| 230-7 | T-REEL FG-2 IN | 21 | GND (REEL FG) | 230-11 |
| | — | 22 | — | |
| 206-21C | TAPE TENSION 2 OUT | 23 | S-REEL CURRENT IN | 230-2 |
| 230-9 | T-REEL CURRENT IN | 24 | GND (REEL CURRENT) | 207-23C, 230-10 |
| 230-3 | S-REEL MOTOR DRIVE OUT | 25 | T-REEL MOTOR DRIVE OUT | 230-6 |
| 227-1 | VCC (S-TENSION SENSOR) | 26 | S-TENSION SENSOR (+) IN | 227-2 |
| 227-4 | GND (S-TENSION SENSOR) | 27 | — | |
| | — | 28 | — | |
| | — | 29 | — | |
| -5V | REG -5V IN | 30 | REG -5V IN | -5V |
| -12V | REG -12V IN | 31 | REG -12V IN | -12V |
| | GND | 32 | GND | |

C

| | | |
|---|---|---|
| | GND | 1 |
| +12V | REG +12V IN | 2 |
| +5V | REG +5V IN | 3 |
| +9V | UNREG +9V IN | 4 |
| | — | 5 |
| | — | 6 |
| 206-7C | S-REEL REV/FWD DET OUT | 7 |
| 206-8C | T-REEL REV/FWD DET OUT | 8 |
| | — | 9 |
| | — | 10 |
| 229-3, 208-13B | CAPSTAN CURRENT IN | 11 |
| | — | 12 |
| 206-14A | PG SW PULSE EDGE OUT | 13 |
| 206-14C | T-REEL PWM IN | 14 |
| 206-15C | L:S CCW IN | 15 |
| 107-2B | TBC SWITCHING PULSE OUT | 16 |
| 208-18B | H:DT HEAD SELECT IN | 17 |
| | — | 18 |
| 230-12 | VCC (REEL FG) | 19 |
| 230-8 | T-REEL FG-1 IN | 20 |
| 211-7, 208-21C | SV RESET COMMAND IN | 21 |
| 206-21B | TAPE TENSION 1 OUT | 22 |
| 230-10, 207-24B | GND (REEL CURRENT) | 23 |
| 208-23B, 206-23C | SV CLOCK IN | 24 |
| | GND (REEL MOTOR DRIVE) | 25 |
| 227-3 | S-TENSION SENSOR (-) IN | 26 |
| | — | 27 |
| | — | 28 |
| | — | 29 |
| -5V | REG -5V IN | 30 |
| -12V | REG -12V IN | 31 |
| | GND | 32 |

## SV-84P

CN208

| A | | | B | |
|---|---|---|---|---|
| | GND | 1 | GND | |
| +12V | REG +12V IN | 2 | REG +12V IN | +12V |
| +5V | REG +5V IN | 3 | REG +5V IN | +5V |
| +9V | UNREG +9V IN | 4 | UNREG +9V IN | +9V |
| 225-4A, 207-5A, 206-5A | V REF IN | 5 | 1/2 V REF IN | 206-5B, 207-5B |
| | — | 6 | — | |
| | — | 7 | — | |
| | — | 8 | — | |
| 216-1 | CTL HEAD (X) | 9 | CTL HEAD (Y) | 216-2 |
| 211-9 | EDIT CTL OUT | 10 | INTERPOLATE CTL OUT | 212-19 |
| 206-11A | SWITCHED CTL OUT | 11 | CAPSTAN FWD/REV OUT | 206-11B, 207-11B, 229-4 |
| 206-12A | D/A 0 IN | 12 | D/A 1 IN | 206-12B |
| 229-1 | H:CAPSTAN POWER ON OUT | 13 | CAPSTAN CURRENT IN | 207-11C, 229-3 |
| 228-5 | DRUM SPEED PG (A) IN | 14 | DRUM PHASE PG IN | 228-3 |
| 207-12B | DRUM SHAPED PG (A) OUT | 15 | DRUM ERROR OUT | 228-1 |
| 111-7A, 109-2B, 211-8 | TAPE DIRECTION OUT | 16 | STOP SERVO FG (B) OUT | 206-15A |
| | — | 17 | — | |
| 207-18A | H:NORMAL SW POSITION IN | 18 | H:DT HEAD SELECT IN | 207-17C |
| | — | 19 | — | |
| | — | 20 | — | |
| | — | 21 | H:VIDEO REC/EE (MOD) IN | 103-15B, 205-21A |
| 229-5 | VCC (CAPSTAN FG) | 22 | CAPSTAN FG (A) IN | 229-6 |
| 229-8 | GND (CAPSTAN FG) | 23 | SV CLOCK IN | 206-23C, 207-24C |
| 206-24B | CAPSTAN SHAPED FG (A) OUT | 24 | — | |
| 206-25A | D 0 IN/OUT | 25 | D 1 IN/OUT | 206-25B |
| 206-26A | D 3 IN/OUT | 26 | D 4 IN/OUT | 206-26B |
| 206-27A | D 6 IN/OUT | 27 | D 7 IN/OUT | 206-27B |
| 206-28A | A 1 IN | 28 | A 2 IN | 206-28B |
| 206-29A | L:RD IN | 29 | L:WR IN | 206-29B |
| -5V | REG -5V IN | 30 | REG -5V IN | -5V |
| -12V | REG -12V IN | 31 | REG -12V IN | -12V |
| | GND | 32 | GND | |

C

| | | |
|---|---|---|
| | GND | 1 |
| +12V | REG +12V IN | 2 |
| +5V | REG +5V IN | 3 |
| +9V | UNREG +9V IN | 4 |
| | — | 5 |
| | — | 6 |
| | — | 7 |
| | — | 8 |
| 216-3 | CTL HEAD (B) | 9 |
| | — | 10 |
| 229-2 | CAPSTAN ERROR OUT | 11 |
| 206-12C | D/A 2 IN | 12 |
| 228-7 | DRUM SPEED PG (B) IN | 13 |
| 207-12A | DRUM SHAPED PHASE PG OUT | 14 |
| 228-2 | DRUM CURRENT IN | 15 |
| | — | 16 |
| 207-16B, 206-16B | SWITCHED PG SW PULSE IN | 17 |
| 212-12, 206-18C | 1/2 VD IN | 18 |
| 207-10B | INCOME/EXT OUT | 19 |
| 109-20C, 111-11C, 202-27C, 205-14A, 211-26 | L:METAL/H:OXIDE OUT | 20 |
| 211-7, 207-21C | SV RESET COMMAND IN | 21 |
| 229-7 | CAPSTAN FG (B) IN | 22 |
| 206-24A | CAPSTAN FWD/REV DET OUT | 23 |
| 206-24C | CAPSTAN 4FG OUT | 24 |
| 206-25C | D 2 IN/OUT | 25 |
| 206-26C | D 5 IN/OUT | 26 |
| 206-27C | A 0 IN | 27 |
| 206-28C | L:CS IN | 28 |
| 206-29C | SERVO RESET IN | 29 |
| -5V | REG -5V IN | 30 |
| -12V | REG -12V IN | 31 |
| | GND | 32 |

## CN225

| | | | |
|---|---|---|---|
| SW-144, 511-12 | L:AUDIO NR LAMP OUT | 1A | 211-11 |
| SW-144, 511-11 | L:LTC LAMP OUT | 2A | 211-13 |
| SW-144, 516-4 | L:REMOTE-1 IN | 3A | 212-5 |
| SW-144, 516-3 | V REF OUT | 4A | 206-9A, 207-5A, 208-5A |
| SW-144, 516-1 | — | 5A | |
| SW-144, 541-5 | H:AUTO STEREO OUT | 6A | 123-2B, 212-4B, 233-1 |
| SW-144, 511-6 | — | 7A | |
| BF-2B, 531-3 | CH-1 PB OUT (X) | 8A | 224-11B |
| BF-2B, 531-4 | CH-1 PB LEVEL IN | 9A | 224-11A |
| BF-2B, 531-8 | CH-2 PB OUT (X) | 10A | 224-13B |
| BF-2B, 531-9 | CH-2 PB LEVEL IN | 11A | 224-13A |
| BF-2B, 531-1 | — | 12A | |
| BF-2B, 531-6 | — | 13A | |
| BF-2B, 540-8 | CH-2 LINE OUT (X) | 14A | 224-7A, 237-3A |
| BF-2B, 540-6 | CH-1 LINE OUT (X) | 15A | 224-9A, 237-4A |
| SW-144, 511-10 | L:VITC LAMP OUT | 1B | 211-12 |
| SW-144, 511-9 | L:AUTO OFF LAMP OUT | 2B | 211-14 |
| SW-144, 516-5 | L:REMOTE-2 IN | 3B | 212-6 |
| SW-144, 516-2 | — | 4B | |
| SW-144, 511-4 | L:AFM/HiFi OUT | 5B | 212-24 |
| SW-144, 511-5 | — | 6B | |
| SW-144, 511-7 | — | 7B | |
| BF-2B, 540-2 | — | 8B | |
| BF-2B, 540-1 | CH-1 PB OUT (B) | 9B | 204-10A |
| BF-2B, 531-10 | — | 10B | |
| BF-2B, 531-2 | CH-2 PB OUT (B) | 11B | 204-12A |
| BF-2B, 531-7 | — | 12B | |
| BF-2B, 540-7 | — | 13B | |
| BF-2B, 540-5 | CH-2 LINE OUT (B) | 14B | 204-6A, 237-3B |
| BF-2B, 540-5 | CH-1 LINE OUT (B) | 15B | 204-8A, 237-4B |

## CN226

| | | |
|---|---|---|
| SE-57, 703-1 | NC | 1 |
| SE-57, 703-2 | NC | 2 |
| SE-57, 703-3 | NC | 3 |
| SE-57, 703-4 | NC | 4 |
| SE-57, 703-5 | LOADING DIRECTION OUT | 5 |
| SE-57, 703-6 | LOADING SPEED OUT | 6 |
| SE-57, 703-7 | LOADING FG IN | 7 |
| SE-57, 703-8 | UNREG +14V OUT | 8 |
| SE-57, 703-9 | UNREG -17V OUT | 9 |
| SE-57, 703-10 | UNREG GND | 10 |
| SE-57, 703-11 | REG +5V OUT | 11 |
| SE-57, 703-12 | L:LOADING MUTE OUT | 12 |

## CN227

| | | |
|---|---|---|
| TR-18, 1-1 | VCC (S-TENSION SENSOR) | 1 |
| TR-18, 1-2 | S-TENSION SENSOR (+) IN | 2 |
| TR-18, 1-3 | S-TENSION SENSOR (-) IN | 3 |
| TR-18, 1-4 | GND (S-TENSION SENSOR) | 4 |

## CN228

| | | |
|---|---|---|
| RE-28, 811-1 | DRUM ERROR OUT | 1 |
| RE-28, 811-2 | DRUM CURRENT IN | 2 |
| RE-28, 811-3 | DRUM PHASE PG IN (X) | 3 |
| RE-28, 811-4 | DRUM PHASE PG IN (B) | 4 |
| RE-28, 811-5 | DRUM SPEED PG (A) IN (X) | 5 |
| RE-28, 811-6 | DRUM SPEED PG (A) IN (B) | 6 |
| RE-28, 811-7 | DRUM SPEED PG (B) IN (X) | 7 |
| RE-28, 811-8 | DRUM SPEED PG (B) IN (B) | 8 |

## CN229

| | | |
|---|---|---|
| RE-28, 813-1 | H:CAPSTAN POWER ON OUT | 1 |
| RE-28, 813-2 | CAPSTAN ERROR OUT | 2 |
| RE-28, 813-3 | CAPSTAN CURRENT IN | 3 |
| RE-28, 813-4 | CAPSTAN FWD/REV OUT | 4 |
| RE-28, 813-5 | VCC (CAPSTAN FG) | 5 |
| RE-28, 813-6 | CAPSTAN FG (A) IN | 6 |
| RE-28, 813-7 | CAPSTAN FG (B) IN | 7 |
| RE-28, 813-8 | GND (CAPSTAN FG) | 8 |

## CN230

| | | |
|---|---|---|
| RE-36, 807-1 | H:REEL POWER ON OUT | 1 |
| RE-36, 807-2 | S-REEL CURRENT IN | 2 |
| RE-36, 807-3 | S-REEL MOTOR DRIVE OUT | 3 |
| RE-36, 807-4 | S-REEL FG-2 IN | 4 |
| RE-36, 807-5 | S-REEL FG-1 IN | 5 |
| RE-36, 807-6 | T-REEL MOTOR DRIVE OUT | 6 |
| RE-36, 807-7 | T-REEL FG-2 IN | 7 |
| RE-36, 807-8 | T-REEL FG-1 IN | 8 |
| RE-36, 807-9 | T-REEL CURRENT IN | 9 |
| RE-36, 807-10 | GND (REEL CURRENT) | 10 |
| RE-36, 807-11 | GND (REEL FG) | 11 |
| RE-36, 807-12 | VCC (REEL FG) | 12 |

## CN232

| | | |
|---|---|---|
| DP-73, 522-1 | REG +12V OUT | 1 |
| DP-73, 522-2 | GND | 2 |
| DP-73, 522-3 | REG +5V OUT | 3 |

## CN233

| | | |
|---|---|---|
| CP-111, 415-1 | H:AUTO STEREO OUT | 1 |
| CP-111, 415-2 | MONITOR VR 1 OUT (B) | 2 |
| CP-111, 415-3 | MONITOR VR 1 OUT (X) | 3 |
| CP-111, 415-4 | MONITOR VR 2 OUT (B) | 4 |
| CP-111, 415-5 | MONITOR VR 2 OUT (X) | 5 |

## CN234

| | | |
|---|---|---|
| HP-33, 552-1 | MONITOR VR 2 IN (X) | 1 |
| HP-33, 552-2 | MONITOR VR 2 IN (B) | 2 |
| HP-33, 552-3 | MONITOR VR 1 IN (X) | 3 |
| HP-33, 552-4 | MONITOR VR 1 IN (B) | 4 |

## CN235

| | | |
|---|---|---|
| RW-57, 451-2 | UNREG +14V OUT | 1 |
| RW-57, 451-3 | UNREG +9V OUT | 2 |
| RW-57, 451-1 | UNREG GND | 3 |
| RW-57, 451-4 | N.C. | 4 |

16-352

16-353

A B C D E F G H

MB-191C (4/4)

## SV-84P

CN208

| A | | B | |
|---|---|---|---|
| GND | 1 | GND | → +12V |
| REG +12V IN | 2 | REG +12V IN | |
| REG +5V IN | 3 | REG +5V IN | → +5V |
| UNREG +9V IN | 4 | UNREG +9V IN | → +9V |
| V REF IN | 5 | 1/2 V REF IN | 206-5B, 207-5B |
| — | 6 | — | |
| — | 7 | — | |
| — | 8 | — | |
| CTL HEAD (X) | 9 | CTL HEAD (Y) | 216-2 |
| EDIT CTL OUT | 10 | INTERPOLATE CTL OUT | 212-19 |
| SWITCHED CTL OUT | 11 | CAPSTAN FWD/REV OUT | 206-11B, 207-11B, 229-4 |
| D/A 0 IN | 12 | D/A 1 IN | 206-12B |
| CAPSTAN POWER ON OUT | 13 | CAPSTAN CURRENT IN | 207-11C, 229-3 |
| DRUM SPEED PG (A) IN | 14 | DRUM PHASE PG IN | 228-3 |
| DRUM SHAPED PG (A) OUT | 15 | DRUM ERROR OUT | 228-1 |
| TAPE DIRECTION OUT | 16 | STOP SERVO FG (B) OUT | 206-15A |
| — | 17 | — | |
| ORMAL SW POSITION IN | 18 | H:DT HEAD SELECT IN | 207-17C |
| — | 19 | — | |
| — | 20 | — | |
| — | 21 | H:VIDEO REC/EE (WCID) IN | 103-15B, 205-21A |
| VCC (CAPSTAN FG) | 22 | CAPSTAN FG (A) IN | 229-6 |
| GND (CAPSTAN FG) | 23 | SV CLOCK IN | 206-23C, 207-24C |
| STAN SHAPED FG (A) OUT | 24 | — | |
| D 0 IN/OUT | 25 | D 1 IN/OUT | 206-25B |
| D 3 IN/OUT | 26 | D 4 IN/OUT | 206-26B |
| D 6 IN/OUT | 27 | D 7 IN/OUT | 206-27B |
| A 1 IN | 28 | A 2 IN | 206-28B |
| L:RD IN | 29 | L:WR IN | 206-29B |
| REG -5V IN | 30 | REG -5V IN | → -5V |
| REG -12V IN | 31 | REG -12V IN | → -12V |
| GND | 32 | GND | |

C

| | |
|---|---|
| GND | 1 |
| REG +12V IN | 2 |
| REG +5V IN | 3 |
| UNREG +9V IN | 4 |
| — | 5 |
| — | 6 |
| — | 7 |
| — | 8 |
| CTL HEAD (B) | 9 |
| — | 10 |
| APSTAN ERROR OUT | 11 |
| D/A 2 IN | 12 |
| DRUM SPEED PG (B) IN | 13 |
| DRUM SHAPED PHASE PG OUT | 14 |
| DRUM CURRENT IN | 15 |
| — | 16 |
| CHED PG SW PULSE IN | 17 |
| 1/2 VD IN | 18 |
| INCOME/EXT OUT | 19 |
| L:METAL/H:OXIDE OUT | 20 |
| SV RESET COMMAND IN | 21 |
| CAPSTAN FG (B) IN | 22 |
| TAN FWD/REV DET OUT | 23 |
| CAPSTAN 4FG OUT | 24 |
| D 2 IN/OUT | 25 |
| D 5 IN/OUT | 26 |
| A 0 IN | 27 |
| L:CS IN | 28 |
| SERVO RESET IN | 29 |
| REG -5V IN | 30 |
| REG -12V IN | 31 |
| GND | 32 |

SE-57, 703-7 / 703-8 — LOADING FG IN — J706-16C

SE-57, 703-9 — UNREG +17V OUT — +14V / -17V
SE-57, 703-10 — UNREG GND
SE-57, 703-11 — REG +5V OUT — +5V
SE-57, 703-12 — L:LOADING MOTE OUT — J206-8A

CK227

| | | | |
|---|---|---|---|
| TR-18, 1-1 | 1 | VCC (S-TENSION SENSOR) | 207-26A |
| TR-18, 1-2 | 2 | S-TENSION SENSOR (+) IN | 207-26B |
| TR-18, 1-3 | 3 | S-TENSION SENSOR (-) IN | 207-26C |
| TR-18, 1-4 | 4 | GND (S-TENSION SENSOR) | 207-27A |

CK228

| | | | |
|---|---|---|---|
| RE-28, 811-1 | 1 | DRUM ERROR OUT | 208-13B |
| RE-28, 811-2 | 2 | DRUM CURRENT IN | 208-15C |
| RE-28, 811-3 | 3 | DRUM PHASE PG IN (X) | 208-14B |
| RE-28, 811-4 | 4 | DRUM PHASE PG IN (B) | 208-14A |
| RE-28, 811-5 | 5 | DRUM SPEED PG (A) IN (X) | |
| RE-28, 811-6 | 6 | DRUM SPEED PG (A) IN (B) | |
| RE-28, 811-7 | 7 | DRUM SPEED PG (B) IN (X) | 208-13C |
| RE-28, 811-8 | 8 | DRUM SPEED PG (B) IN (B) | |

CK229

| | | | |
|---|---|---|---|
| RE-28, 813-1 | 1 | H:CAPSTAN POWER ON OUT | 208-13A |
| RE-28, 813-2 | 2 | CAPSTAN ERROR OUT | 208-11C |
| RE-28, 813-3 | 3 | CAPSTAN CURRENT IN | 207-11C, 208-13B |
| RE-28, 813-4 | 4 | CAPSTAN FWD/REV OUT | 206-11B, 207-11B, 208-11B |
| RE-28, 813-5 | 5 | VCC (CAPSTAN FG) | 208-22A |
| RE-28, 813-6 | 6 | CAPSTAN FG (A) IN | 208-22B |
| RE-28, 813-7 | 7 | CAPSTAN FG (B) IN | 208-22C |
| RE-28, 813-8 | 8 | GND (CAPSTAN FG) | 208-23A |

CK230

| | | | |
|---|---|---|---|
| RE-36, 807-1 | 1 | H:REEL POWER ON OUT | 206-13C |
| RE-36, 807-2 | 2 | S-REEL CURRENT IN | 207-23B |
| RE-36, 807-3 | 3 | S-REEL MOTOR DRIVE OUT | 207-25A |
| RE-36, 807-4 | 4 | S-REEL FG-2 IN | 207-20B |
| RE-36, 807-5 | 5 | S-REEL FG-1 IN | 207-20A |
| RE-36, 807-6 | 6 | T-REEL MOTOR DRIVE OUT | 207-25B |
| RE-36, 807-7 | 7 | T-REEL FG-2 IN | 207-21A |
| RE-36, 807-8 | 8 | T-REEL FG-1 IN | 207-20C |
| RE-36, 807-9 | 9 | T-REEL CURRENT IN | 207-24A |
| RE-36, 807-10 | 10 | GND (REEL CURRENT) | 207-23C, 207-24B |
| RE-36, 807-11 | 11 | GND REEL FG | 207-21B |
| RE-36, 807-12 | 12 | VCC REEL FG | 207-19C |

CK232

| | | | |
|---|---|---|---|
| DP-73, 522-1 | 1 | REG +12V OUT | → +12V |
| DP-73, 522-2 | 2 | GND | |
| DP-73, 522-3 | 3 | REG +5V OUT | → +5V |

CK233

| | | | |
|---|---|---|---|
| CP-111, 415-1 | 1 | H:AUTO STEREO OUT | 123-25, 212-43, 225-6A |
| CP-111, 415-2 | 2 | MONITOR VR 1 OUT (B) | 234-4 |
| CP-111, 415-3 | 3 | MONITOR VR 1 OUT (X) | 234-3 |
| CP-111, 415-4 | 4 | MONITOR VR 2 OUT (B) | 234-2 |
| CP-111, 415-5 | 5 | MONITOR VR 2 OUT (X) | 234-1 |

CK234

| | | | |
|---|---|---|---|
| HP-33, 552-1 | 1 | MONITOR VR 2 IN (X) | 233-5 |
| HP-33, 552-2 | 2 | MONITOR VR 2 IN (B) | 233-4 |
| HP-33, 552-3 | 3 | MONITOR VR 1 IN (X) | 233-3 |
| HP-33, 552-4 | 4 | MONITOR VR 1 IN (B) | 233-2 |

CK235

| | | | |
|---|---|---|---|
| RM-57, 451-2 | 1 | UNREG +14V OUT | → +14V |
| RM-57, 451-3 | 2 | UNREG +9V OUT | → +9V |
| RM-57, 451-1 | 3 | UNREG GND | |
| RM-57, 451-13 | 4 | D-GND | D-GND, UNREG |

CK236

| | | | |
|---|---|---|---|
| CP-111, 407-3 | 1A | CH-2 MONITOR IN (X) | 215-14A |
| CP-111, 407-1 | 2A | CH-1 MONITOR IN (X) | 215-15A |
| CP-111, 407-4 | 1B | CH-2 MONITOR IN (B) | 215-14B |
| CP-111, 407-2 | 2B | CH-1 MONITOR IN (B) | 215-15B |

CK237

| | | | |
|---|---|---|---|
| CP-111, 409-2 | 1A | CH-4 LINE OUT (X) | 202-10C, 215-4A |
| CP-111, 409-4 | 2A | CH-3 LINE OUT (X) | 202-23C, 215-7A |
| CP-111, 411-2 | 3A | CH-2 LINE OUT (X) | 204-7A, 225-14A |
| CP-111, 411-4 | 4A | CH-1 LINE OUT (X) | 204-9A, 225-15A |
| | 5A | — | |
| | 6A | — | |
| CN PANEL 007-2 | 7A | TIME CODE OUT (X) | 205-11B |
| CN PANEL 007-3 | 8A | TIME CODE OUT (Y) | 205-11C |
| | 9A | — | |
| | 10A | — | |
| CP-111, 413-3 | 11A | REG +12V OUT | → +12V |
| CP-111, 413-2 | 12A | GND | |
| CP-111, 413-1 | 13A | REG -12V OUT | → -12V |
| CP-111, 414-1 | 14A | H:MONI SEL CH-1/3 OUT | 130-11 |
| CP-111, 414-3 | 15A | H:MONI SEL CH-2/4 OUT | 130-13 |
| CP-111, 409-1 | 1B | CH-4 LINE OUT (B) | 202-10B, 215-4B |
| CP-111, 409-3 | 2B | CH-3 LINE OUT (B) | 202-23B, 215-7B |
| CP-111, 411-1 | 3B | CH-2 LINE OUT (B) | 204-6A, 225-14B |
| CP-111, 411-3 | 4B | CH-1 LINE OUT (B) | 204-8A, 225-15B |
| | 5B | — | |
| | 6B | — | |
| | 7B | — | |
| CN PANEL 007-1 | 8B | TIME CODE OUT (B) | 205-11A |
| | 9B | — | |
| CN PANEL 019-12 | 10B | L:8H ADVANCE OFF IN | 211-42 |
| | 11B | — | |
| | 12B | — | |
| | 13B | — | |
| CP-111, 414-2 | 14B | H:MONI SEL STEREO OUT | 130-12 |
| CP-111, 414-4 | 15B | L:AFM/H:LAU CONTROL OUT | 211-48 |

MB-191C (4/4)

**MB-191C (4/4)**
1-624-047-11, 12, 13
BVW-60P

16-353

16-354

E F G H I J K L

MB-192 MB-192

# MB-192; MOTHER BOARD

## SY-61A

### CN301

| A | | B | |
|---|---|---|---|
| GND | 1 | GND | |
| REG +12V IN | 2 | REG +12V IN | +12V |
| REG +5V IN | 3 | REG +5V IN | +5V |
| UNREG +9V IN | 4 | UNREG +9V IN | +9V |
| UNREG +14V IN | 5 | UNREG +14V IN | +14V |
| UNREG GND | 6 | UNREG GND | UNREG |
| | 7 | | |
| L:EJECT COMMAND IN | 8 | L:STOP COMMAND IN | 306-2 |
| L:REW COMMAND IN | 9 | L:PLAY COMMAND IN | 306-5 |
| L:PAUSE COMMAND IN | 10 | L:PAUSE STATUS-1 IN/OUT | 306-8 |
| | 11 | | |
| | 12 | | |
| SEARCH COMMAND A IN | 13 | SEARCH COMMAND B IN | 306-17 |
| L:STILL TENSION IN | 14 | H:NORMAL FWD IN | 306-20 |
| L:STANDBY STATUS OUT | 15 | L:STOP STATUS OUT | 306-22 |
| L:REW STATUS OUT | 16 | L:PLAY STATUS OUT | 306-25 |
| | 17 | L:TACH OUT | 306-28 |
| L:PAUSE STATUS-2 OUT | 18 | SPARE | 306-31 |
| L:STANDBY ON STATUS OUT | 19 | L:NORMAL PLAY STATUS OUT | |
| RECEIVE (+) IN/OUT | 20 | RECEIVE (-) IN/OUT | 306-35 |
| TRANSMIT (+) IN/OUT | 21 | TRANSMIT (-) IN/OUT | 306-38 |
| TIME CODE GEN INT IN | 22 | LTC INT IN | 303-26A |
| L:REMOTE-1 IN | 23 | L:REMOTE-2 IN | 308-6 |
| | 24 | | |
| | 25 | | |
| | 26 | | |
| | 27 | L:HUMID IN | 303-28A |
| L:TAPE END IN | 28 | | |
| KEY SERIAL COMMAND OUT | 29 | INT KEY SERIAL STATUS IN | 304-5A |
| | 30 | | |
| L:CAPSTAN LOCK 4F IN | 31 | L:CAPSTIN LOCK 2/4F IN | 308-9 |
| | 32 | | |

### CN302

| A | | B | |
|---|---|---|---|
| H:REC SERIAL REQUEST OUT | 1 | H:SV/REC READY IN | 307-2 |
| SV/REC SERIAL STATUS IN | 2 | SV/REC SERIAL CLOCK IN | 307-5 |
| H:SV SERIAL REQUEST OUT | 3 | | |
| SV RESET COMMAND OUT | 4 | TAPE DIRECTION IN | 307-8, 303-25B |
| | 5 | | |
| L:AUDIO NR IN | 6 | L:AUDIO NR LAMP OUT | 307-11 |
| L:LTC LAMP OUT | 7 | L:AUTO OFF LAMP OUT | 307-14 |
| L:FAST/H:AUDIO ATT OUT | 8 | L:AUDIO MUTE OUT | 307-17 |
| H:AFM MUTE OUT | 9 | | |
| | 10 | | |
| REF VD IN | 11 | REF HD IN | 307-20 |
| CHARACTER SIGNAL OUT | 12 | CHARACTER GATE OUT | 307-22 |
| | 13 | | |
| | 14 | | |
| | 15 | | |
| | 16 | | |
| | 17 | | |
| | 18 | | |
| | 19 | | |
| | 20 | | |
| DATA BUS 7 IN/OUT | 21 | L:EXP RESET OUT | 304-21B |
| DATA BUS 6 IN/OUT | 22 | H:AUTO STEREO IN | 304-22B, 308-4B |
| DATA BUS 5 IN/OUT | 23 | | |
| DATA BUS 4 IN/OUT | 24 | ADDRESS BUS 4 OUT | 304-24B |
| DATA BUS 3 IN/OUT | 25 | ADDRESS BUS 3 OUT | 304-25B |
| DATA BUS 2 IN/OUT | 26 | ADDRESS BUS 2 OUT | 304-26B |
| DATA BUS 1 IN/OUT | 27 | ADDRESS BUS 1 OUT | 304-27B |
| DATA BUS 0 IN/OUT | 28 | ADDRESS BUS 0 OUT | 304-28B |
| UNREG -17V IN | 29 | UNREG -17V IN | -17V |
| REG -5V IN | 30 | REG -5V IN | -5V |
| REG -12V IN | 31 | REG -12V IN | -12V |
| GND | 32 | GND | |

### C

| | | |
|---|---|---|
| SV/REC SERIAL COMMAND OUT | 307-3 | 1 |
| | | 2 |
| | | 3 |
| EDIT CTL IN | 307-9, 303-25A | 4 |
| | | 5 |
| L:VITC LAMP OUT | 307-12 | 6 |
| L:COMPOSITE DT OUT | 307-15 | 7 |
| L:AUDIO NR ON OUT | 307-18 | 8 |
| FAN MOTOR CHECK IN | 306-40 | 9 |
| | | 10 |
| | | 11 |
| | | 12 |
| | | 13 |
| | | 14 |
| | | 15 |
| | | 16 |
| | | 17 |
| | | 18 |
| | | 19 |
| | | 20 |
| L:CS VITC READER OUT | 304-21C | 21 |
| L:CS LTC READER OUT | 304-22C | 22 |
| | | 23 |
| L:CS MECH I/O OUT | 304-24C | 24 |
| L:CS TC I/O OUT | 304-25C | 25 |
| L:CS VIDEO I/O OUT | 304-26C | 26 |
| L:RD OUT | 304-27C | 27 |
| L:WR OUT | 304-28C | 28 |
| UNREG -17V IN | -17V | 29 |
| REG -5V IN | -5V | 30 |
| REG -12V IN | -12V | 31 |
| GND | | 32 |

### C

| | | |
|---|---|---|
| GND | | 1 |
| REG +12V IN | +12V | 2 |
| REG +5V IN | +5V | 3 |
| UNREG +9V IN | +9V | 4 |
| UNREG +14V IN | +14V | 5 |
| UNREG GND | UNREG | 6 |
| | | 7 |
| L:F.FWD COMMAND IN | 306-3 | 8 |
| L:SEARCH COMMAND IN | 306-6 | 9 |
| | | 10 |
| | | 11 |
| | | 12 |
| L:REV COMMAND IN | 306-18 | 13 |
| | | 14 |
| L:F.FWD STATUS OUT | 306-23 | 15 |
| | | 16 |
| L:CAPSTAN LOCK OUT | 306-29 | 17 |
| CTL OUT | 306-32 | 18 |
| L:CASSETTE IN STATUS OUT | 308-4 | 19 |
| PRIORITY IN | 306-36 | 20 |
| PRIORITY OUT | 306-39 | 21 |
| VITC INT IN | 303-26B | 22 |
| | | 23 |
| | | 24 |
| | | 25 |
| | | 26 |
| L:TAPE BEGIN IN | 303-28B | 27 |
| | | 28 |
| EXT KEY SERIAL STATUS IN | 310-8 | 29 |
| L:EXT/H:AUTO IN | 308-11 | 30 |
| L:CAPSTAN LOCK 2F IN | 308-10 | 31 |
| 1/2 VD IN | 303-18C, 308-12 | 32 |

### CN303

| A | | B | |
|---|---|---|---|
| GND | 1 | GND | |
| REG +12V IN | 2 | REG +12V IN | +12V |
| REG +5V IN | 3 | REG +5V IN | +5V |
| UNREG +9V IN | 4 | UNREG +9V IN | +9V |
| UNREG +14V IN | 5 | UNREG +14V IN | +14V |
| UNREG GND | 6 | UNREG GND | UNREG |
| L:Y IMPACT ERROR INH IN | 7 | L:C IMPACK ERROR INH IN | 308-4B |
| | 8 | | |
| GND | 9 | GND | |
| GND | 10 | GND | |
| TAPE BEGIN SENSOR IN 00 | 11 | TAPE BEGIN SENSOR IN 03 | 313-2 |
| GND | 12 | GND | |
| TAPE END SENSOR IN 00 | 13 | TAPE END SENSOR IN 03 | 309-4 |
| GND | 14 | GND | |
| Y-IMPACT ERROR IN 00 | 15 | Y-IMPACT ERROR IN 03 | 317-2 |
| C-IMPACT ERROR IN 00 | 16 | C-IMPACT ERROR IN 03 | 317-4 |
| Y-IMPACT ERROR OUT 00 | 17 | Y-IMPACT ERROR OUT 03 | 317-6 |
| C-IMPACT ERROR OUT 00 | 18 | C-IMPACT ERROR OUT 03 | 317-8 |
| REF VD IN | 19 | Y COUNT H IN | 308-14 |
| | 20 | L:AFM/H:LAU IN | 308-24 |
| H.M. CONTROL T2 OUT | 21 | H.M. CONTROL T3 OUT | 314-3 |
| VIDEO WITH VITC IN 00 | 22 | VIDEO WITH VITC IN 03 | |
| L:EMERGENCY IN | 23 | INTERPOLATE CTL IN | 308-19 |
| Y SYNC IN | 24 | SV SYNC IN | 308-22 |
| EDIT CTL IN | 25 | TAPE DIRECTION IN | 307-8, 302-4B |
| LTC INT OUT | 26 | VITC INT OUT | 301-22C |
| | 27 | | |
| L:HUMID OUT | 28 | L:TAPE BEGIN OUT | 301-27C |
| SV 1 OUT | 29 | SV 2 OUT | 308-31 |
| H:ADVANCE OFF OUT | 30 | L:TBC CONF1 MODE OUT | 308-34 |
| | 31 | H:COMB FILTER OFF OUT | 308-37 |
| L:H SHIFT INH OUT | 32 | | |

### C

| | | |
|---|---|---|
| GND | | 1 |
| REG +12V IN | +12V | 2 |
| REG +5V IN | +5V | 3 |
| UNREG +9V IN | +9V | 4 |
| UNREG +14V IN | +14V | 5 |
| UNREG GND | UNREG | 6 |
| | | 7 |
| L:EXT.KEY BOARD TEST OUT | 310-9 | 8 |
| CONDENSATION SENSOR IN | 311-4 | 9 |
| GND | | 10 |
| GND | | 11 |
| GND | | 12 |
| GND | | 13 |
| GND | | 14 |
| | | 15 |
| | | 16 |
| DL PB V IN | 308-40 | 17 |
| 1/2 VD IN | 308-12, 301-32C | 18 |
| C COUNT H IN | 308-15 | 19 |
| H.M. CONTROL T1 OUT | 314-1 | 20 |
| H.M. CONTROL CT OUT | 314-4 | 21 |
| L:Y DROPOUT IN | 308-17 | 22 |
| L:TIME CODE EXIST IN | 308-20 | 23 |
| READER TIME CODE IN | 308-23 | 24 |
| TIME CODE GEN INT OUT | 301-22A | 25 |
| | | 26 |
| | | 27 |
| L:TAPE END OUT | 301-28A | 28 |
| L:REC OUT | 308-32 | 29 |
| | | 30 |
| H:SERVO REF HOLD OUT | 308-38 | 31 |
| | | 32 |

## SY-64AP

### CN304

| A | | B | |
|---|---|---|---|
| H:F.FWD MODE OUT | 307-23 | H:REW MODE OUT | |
| L:METAL/H:OXIDE OUT | 307-26 | L:DT HEAD/H:RP HE | |
| L:NOISELESS PB OUT | 307-29 | | |
| | | H:IN PHASE OUT | |
| INT KEY SERIAL STATUS OUT | 301-29B | REF FIRST FIELD I | |
| PB B-Y FP1 IN | 307-36 | PB B-Y FP2 IN | |
| L:DET NG IN | 308-41 | | |
| | | H:EXT SYNC DET IN | |
| | | | |
| | | | |
| H:CASSETTE DOWN 1 IN | 315-3 | H:CASSETTE DOWN 2 | |
| L:LARGE/H:SMALL IN | 315-6 | L:COMPARTMENT EX | |
| H:L-POSITION IN | 311-5 | H:S-POSITION IN | |
| THREAD END IN | 309-5 | THREAD/UNTHREAD E | |
| PINCH SOL STARTER OUT | 309-7 | PINCH SOL HOLDER | |
| POSITION MOTOR (-) OUT | 312-1 | POSITION MOTOR (-) | |
| POSITION MOTOR (+) OUT | 312-3 | POSITION MOTOR (+) | |
| UP/DOWN MOTOR (-) OUT | 315-10 | UP/DOWN MOTOR (-) C | |
| UP/DOWN MOTOR (+) OUT | 315-11 | UP/DOWN MOTOR (+) C | |
| L:AFM/H:LAU CONTROL OUT | 307-48 | L:LARGE HUB IN | |
| DATA BUS 7 IN/OUT | 302-21A | L:EXP RESET IN | |
| DATA BUS 6 IN/OUT | 302-22A | H:AUTO STEREO OUT | |
| DATA BUS 5 IN/OUT | 302-23A | | |
| DATA BUS 4 IN/OUT | 302-24A | ADDRESS BUS 4 IN | |
| DATA BUS 3 IN/OUT | 302-25A | ADDRESS BUS 3 IN | |
| DATA BUS 2 IN/OUT | 302-26A | ADDRESS BUS 2 IN | |
| DATA BUS 1 IN/OUT | 302-27A | ADDRESS BUS 1 IN | |
| DATA BUS 0 IN/OUT | 302-28A | ADDRESS BUS 0 IN | |
| UNREG -17V IN | -17V | UNREG -17V IN | |
| REG -5V IN | -5V | REG -5V IN | |
| REG -12V IN | -12V | REG -12V IN | |
| GND | | GND | |

### C

| | | |
|---|---|---|
| H:CHROMA MUTE OUT | 307-25 | 1 |
| H:NORMAL FWD OUT | 307-28 | 2 |
| | | 3 |
| KEY SERIAL COMMAND IN | 301-29A, 310-7 | 4 |
| VIDEO OUT 1ST FIELD IN | 307-35 | 5 |
| L:VISC EXIST IN | 308-47 | 6 |
| | | 7 |
| L:8H ADVANCE OFF IN | 307-42 | 8 |
| | | 9 |
| | | 10 |
| H:CASSETTE IN 1 IN | 315-5 | 11 |
| H:CASSETTE IN 2 IN | 315-8 | 12 |
| L:METAL/H:OXIDE IN | 311-7 | 13 |
| L:CASSETTE LAMP ON OUT | 315-9 | 14 |
| CLEANING SOL HOLDER OUT | 309-9 | 15 |
| T-BRAKE SOL STARTER OUT | 312-2 | 16 |
| T-BRAKE SOL HOLDER OUT | 312-4 | 17 |
| S-BRAKE SOL STARTER OUT | 312-5 | 18 |
| S-BRAKE SOL HOLDER OUT | 312-6 | 19 |
| L:THICKNESS TAPE IN | 311-9 | 20 |
| L:CS VITC READER IN | 302-21C | 21 |
| L:CS LTC READER IN | 302-22C | 22 |
| | | 23 |
| L:CS MECH I/O IN | 302-24C | 24 |
| L:CS TC I/O IN | 302-25C | 25 |
| L:CS VIDEO I/O IN | 302-26C | 26 |
| L:RD IN | 302-27C | 27 |
| L:WR IN | 302-28C | 28 |
| UNREG -17V IN | -17V | 29 |
| REG -5V IN | -5V | 30 |
| REG -12V IN | -12V | 31 |
| GND | | 32 |

### CN305

| | | |
|---|---|---|
| L:EJECT COMMAND IN | 301-9A | 1 |
| L:STOP COMMAND IN | 301-8B | 2 |
| L:F.FWD COMMAND IN | 301-6C | 3 |
| L:REW COMMAND IN | 301-9A | 4 |
| L:PLAY COMMAND IN | 301-9C | 5 |
| L:SEARCH COMMAND IN | 301-9C | 6 |
| L:PAUSE COMMAND IN | 301-11A | 7 |
| L:PAUSE STATUS-1 IN/OUT | 301-13B | 8 |
| | | 9 |
| | | 10 |
| | | 11 |
| | | 12 |
| SEARCH COMMAND A IN | 301-13A | 13 |
| SEARCH COMMAND B IN | 301-13B | 14 |
| L:REV COMMAND IN | 301-13C | 15 |
| L:STILL TENSION IN | 301-14A | 16 |
| H:NORMAL FWD IN | 301-14B | 17 |
| L:STANDBY STATUS OUT | 301-15A | 18 |
| L:STOP STATUS OUT | 301-15B | 19 |
| L:F.FWD STATUS OUT | 301-15C | 20 |
| L:REW STATUS OUT | 301-16A | 21 |
| L:PLAY STATUS OUT | 301-16B | 22 |
| | | 23 |
| L:TACH OUT | 301-17B | 24 |
| L:CAPSTAN LOCK OUT | 301-17C | 25 |
| L:PAUSE STATUS-2 OUT | 301-19A | 26 |
| SPARE | 301-18B | 27 |
| CTL OUT | 301-13C | 28 |
| SYNCHRONIZE IN | 308-1 | 29 |
| RECEIVE (+) IN/OUT | 301-23A | 30 |
| RECEIVE (-) IN/OUT | 301-23B | 31 |
| PRIORITY IN | 301-24C | 32 |
| TRANSMIT (+) IN/OUT | 301-24A | 33 |
| TRANSMIT (-) IN/OUT | 301-24B | 34 |
| PRIORITY OUT | 301-21C | 35 |
| FAN MOTOR CHECK IN | 302-9C | 36 |

### CN306

| | | |
|---|---|---|
| FW-57-450-1 | 1 | L:EJECT COMMAND IN |
| FW-57-450-2 | 2 | L:STOP COMMAND IN |
| FW-57-450-3 | 3 | L:F.FWD COMMAND IN |
| FW-57-450-4 | 4 | L:REW COMMAND IN |
| FW-57-450-5 | 5 | L:PLAY COMMAND IN |
| FW-57-450-6 | 6 | L:SEARCH COMMAND IN |
| FW-57-450-7 | 7 | L:PAUSE COMMAND IN |
| FW-57-450-8 | 8 | L:PAUSE STATUS-1 IN/OUT |
| NW-57-450-9 | 9 | |
| FW-57-450-10 | 10 | |
| NW-57-450-11 | 11 | |
| FW-57-450-12 | 12 | |
| NW-57-450-13 | 13 | |
| FW-57-450-14 | 14 | |
| NW-57-450-15 | 15 | |
| FW-57-450-16 | 16 | |
| NW-57-450-17 | 17 | |
| FW-57-450-18 | 18 | |
| NW-57-450-19 | 19 | |
| FW-57-450-20 | 20 | |
| NW-57-450-21 | 21 | |
| FW-57-450-22 | 22 | |
| NW-57-450-23 | 23 | |
| FW-57-450-24 | 24 | |
| NW-57-450-25 | 25 | |
| FW-57-450-26 | 26 | |
| NW-57-450-27 | 27 | |
| FW-57-450-28 | 28 | |
| NW-57-450-29 | 29 | |
| FW-57-450-30 | 30 | |
| NW-57-450-31 | 31 | |
| FW-57-450-32 | 32 | |
| NW-57-450-33 | 33 | |
| FW-57-450-34 | 34 | |
| NW-57-450-35 | 35 | |
| FW-57-450-36 | 36 | |
| NW-57-450-37 | 37 | |
| FW-57-450-38 | 38 | |
| NW-57-450-39 | 39 | |
| FW-57-450-40 | 40 | |

### CN307

| | | |
|---|---|---|
| H:REC SERIAL REQUEST OUT | 302-1A | 1 |
| H:SV/REC READY IN | 302-1B | 2 |
| SV/REC SERIAL COMMAND OUT | 302-1C | 3 |
| SV/REC SERIAL STATUS IN | 302-2A | 4 |
| SV/REC SERIAL CLOCK IN | 302-2B | 5 |
| H:SV SERIAL REQUEST OUT | 302-3A | 6 |
| SV RESET COMMAND OUT | 302-4A | 7 |
| TAPE DIRECTION IN | 302-4B, 303-25B | 8 |
| EDIT CTL IN | 302-4C, 303-25A | 9 |
| L:AUDIO NR IN | 302-6A | 10 |
| L:AUDIO NR LAMP OUT | 302-6B | 11 |
| L:VITC LAMP OUT | 302-6C | 12 |
| L:LTC LAMP OUT | 302-7A | 13 |
| L:AUTO OFF LAMP OUT | 302-7B | 14 |
| L:COMPOSITE DT OUT | 302-7C | 15 |
| L:FAST/H:AUDIO ATT OUT | 302-8A | 16 |
| L:AUDIO MUTE OUT | 302-8B | 17 |
| L:AUDIO NR ON OUT | 302-9A | 18 |
| H:AFM MUTE OUT | 302-9B | 19 |
| REF VD IN | 302-11B | 20 |
| CHARACTER SIGNAL OUT | 302-12A | 21 |
| CHARACTER GATE OUT | 302-12B | 22 |
| H:F.FWD MODE OUT | 304-1A | 23 |
| H:REW MODE OUT | 304-1B | 24 |
| H:CHROMA MUTE OUT | 304-1C | 25 |
| L:METAL/H:OXIDE OUT | 304-2A | 26 |
| L:DT HEAD/H:RP HEAD OUT | 304-2B | 27 |
| H:NOISELESS PB OUT | 304-2C | 28 |
| L:HOUSEKEEPING PB OUT | 304-3A | 29 |
| B-Y ID OUT | 304-3C | 30 |
| H:IN PHASE OUT | 304-4B | 31 |
| REF FIRST FIELD IN | 304-5B | 32 |
| VIDEO OUT 1ST FIELD IN | 304-5C | 33 |
| PB B-Y FP1 IN | 304-6A | 34 |
| PB B-Y FP2 IN | 304-6B | 35 |
| | | 36 |
| | | 37 |
| | | 38 |
| | | 39 |
| H:EXT SYNC DET IN | 304-8B | 40 |
| L:8H ADVANCE OFF IN | 304-8C | 41 |
| | | 42 |
| | | 43 |
| | | 44 |
| | | 45 |
| | | 46 |
| | | 47 |
| L:AFM/H:LAU CONTROL OUT | 304-20A | 48 |
| L:THREAD END OUT | 304-14A, 309-5 | 49 |
| L:THREAD/UNTHREAD END OUT | 304-14B, 309-6 | 50 |

### CN308

| | | |
|---|---|---|
| SYNCHRONIZE OUT | 306-33 | 1 |
| L:STANDBY OFF STATUS OUT | 301-19A | 2 |
| L:NOR PLAY STATUS | 301-19B | 3 |
| L:CASSETTE IN STATUS OUT | 301-19C | 4 |
| L:REMOTE-1 IN | 301-23A | 5 |
| L:REMOTE-2 IN | 301-23B | 6 |
| | | 7 |
| CAPSTAN LOCK 4F IN | 301-31A | 8 |
| CAPSTAN LOCK 2/4F IN | 301-31B | 9 |
| CAPSTAN LOCK 2F IN | 301-31C | 10 |
| | | 11 |
| 1/2 VD IN | 301-32C, 303-18C | 12 |
| REF VD IN | 302-11A, 303-19A | 13 |
| Y COUNT H IN | 303-19B | 14 |
| C COUNT H IN | 303-19C | 15 |
| VIDEO WITH VITC IN | 303-22A | 16 |
| L:Y DROPOUT IN | 303-22C | 17 |
| L:EMERGENCY IN | 303-23A | 18 |
| L:INTERPOLATE CTL IN | 303-23B | 19 |
| L:TIME CODE EXIST IN | 303-23C | 20 |
| Y SYNC IN | 303-24A | 21 |
| READER TIME CODE IN | 303-24C | 22 |
| L:AFM/H:LAU IN | 303-20B | 23 |
| | | 24 |
| | | 25 |
| | | 26 |
| | | 27 |
| | | 28 |
| SV 1 OUT | 303-29A | 29 |
| SV 2 OUT | 303-29B | 30 |
| L:REC OUT | 303-29C | 31 |
| H:ADVANCE OFF OUT | 303-30A | 32 |
| L:TBC CONF1 MODE OUT | 303-30B | 33 |
| | | 34 |
| H:COMB FILTER OFF OUT | 303-31B | 35 |
| H:SERVO REF HOLD OUT | 303-31C | 36 |
| L:Y IMPACT ERROR INH IN | 303-7A | 37 |
| DL PB V IN | 303-17C | 38 |
| L:DET NG IN | 304-7A | 39 |

## SY-64AP

CN302

| | A | | B | |
|---|---|---|---|---|
| 307- | H:REC SERIAL REQUEST OUT | 1 | H:SY/REC READY IN | 307-2 |
| 307- | SY/REC SERIAL STATUS IN | 2 | SY/REC SERIAL CLOCK IN | 307-5 |
| 307-6 | H:SY SERIAL REQUEST OUT | 3 | —— | |
| 307-7 | SY RESET COMMAND OUT | 4 | TAPE DIRECTION IN | 307-8, 303-25B |
| | —— | 5 | —— | |
| 307- | L:AUDIO NR IN | 6 | L:AUDIO NR LAMP OUT | 307-11 |
| 307- | L:LTC LAMP OUT | 7 | L:AUTO OFF LAMP OUT | 307-14 |
| 307- | L:FAST/H:AUDIO ATT OUT | 8 | L:AUDIO MUTE OUT | 307-17 |
| 307-.. | H:AFM MUTE OUT | 9 | —— | |
| | —— | 10 | —— | |
| 303-19A, 308-13 | REF VD IN | 11 | REF HD IN | 307-20 |
| 307-.. | CHARACTER SIGNAL OUT | 12 | CHARACTER GATE OUT | 307-22 |
| | —— | 13 | —— | |
| | —— | 14 | —— | |
| | —— | 15 | —— | |
| | —— | 16 | —— | |
| | —— | 17 | —— | |
| | —— | 18 | —— | |
| | —— | 19 | —— | |
| | —— | 20 | —— | |
| 304- | DATA BUS 7 IN/OUT | 21 | L:EXP RESET OUT | 304-21B |
| 304-22A | DATA BUS 6 IN/OUT | 22 | H:AUTO STEREO IN | 304-22B, 308-4B |
| 304-23A | DATA BUS 5 IN/OUT | 23 | —— | |
| 304-24A | DATA BUS 4 IN/OUT | 24 | ADDRESS BUS 4 OUT | 304-24B |
| 304-2 | DATA BUS 3 IN/OUT | 25 | ADDRESS BUS 3 OUT | 304-25B |
| 304-2 | DATA BUS 2 IN/OUT | 26 | ADDRESS BUS 2 OUT | 304-26B |
| 304-2 | DATA BUS 1 IN/OUT | 27 | ADDRESS BUS 1 OUT | 304-27B |
| 304-2 | DATA BUS 0 IN/OUT | 28 | ADDRESS BUS 0 OUT | 304-28B |
| / | UNREG -17V IN | 29 | UNREG -17V IN | -17V |
| / | REG -5V IN | 30 | REG -5V IN | -5V |
| | REG -12V IN | 31 | REG -12V IN | -12V |
| | GND | 32 | GND | |

| C | | |
|---|---|---|
| 307- | SY/REC SERIAL COMMAND OUT | 1 |
| | —— | 2 |
| | —— | 3 |
| 307-9, 303-25A | EDIT CTL IN | 4 |
| | —— | 5 |
| 307-1 | L:VITC LAMP OUT | 6 |
| 307-1 | L:COMPOSITE DT OUT | 7 |
| 307-11 | L:AUDIO NR ON OUT | 8 |
| 306-40 | FAN MOTOR CHECK IN | 9 |
| | —— | 10 |
| | —— | 11 |
| | —— | 12 |
| | —— | 13 |
| | —— | 14 |
| | —— | 15 |
| | —— | 16 |
| | —— | 17 |
| | —— | 18 |
| | —— | 19 |
| | —— | 20 |
| 304-21A | L:CS VITC READER OUT | 21 |
| 304-22C | L:CS LTC READER OUT | 22 |
| | —— | 23 |
| 304-24A | L:CS MECH I/O OUT | 24 |
| 304-25A | L:CS TC I/O OUT | 25 |
| 304-26A | L:CS VIDEO I/O OUT | 26 |
| 304-27A | L:RD OUT | 27 |
| 304-28C | L:WR OUT | 28 |
| ◆ | UNREG -17V IN | 29 |
| ● | REG -5V IN | 30 |
| | REG -12V IN | 31 |
| | GND | 32 |

CN303

| | A | | B | |
|---|---|---|---|---|
| +12V, +5V, +9V, +14V, UNREG | GND | 1 | GND | +12V, +5V, +9V, +14V, UNREG |
| | REG +12V IN | 2 | REG +12V IN | |
| | REG +5V IN | 3 | REG +5V IN | |
| | UNREG +9V IN | 4 | UNREG +9V IN | |
| | UNREG +14V IN | 5 | UNREG +14V IN | |
| | UNREG GND | 6 | UNREG GND | |
| 308-39 | L:Y IMPACT ERROR INH IN | 7 | L:C IMPACK ERROR INH IN | 308-48 |
| | —— | 8 | —— | |
| | GND | 9 | GND | |
| | GND | 10 | GND | |
| 313-1 | TAPE BEGIN SENSOR IN (00) | 11 | TAPE BEGIN SENSOR IN (01) | 313-2 |
| | GND | 12 | GND | |
| 309-3 | TAPE END SENSOR IN (00) | 13 | TAPE END SENSOR IN (01) | 309-4 |
| | GND | 14 | GND | |
| 317-1 | Y-IMPACT ERROR IN (00) | 15 | Y-IMPACT ERROR IN (01) | 317-2 |
| 317-3 | C-IMPACT ERROR IN (00) | 16 | C-IMPACT ERROR IN (01) | 317-4 |
| 317-5 | Y-IMPACT ERROR OUT (00) | 17 | Y-IMPACT ERROR OUT (01) | 317-6 |
| 317-7 | C-IMPACT ERROR OUT (00) | 18 | C-IMPACT ERROR OUT (01) | 317-8 |
| 308-13, 302-11A | REF VD IN | 19 | Y COUNT H IN | 308-14 |
| | —— | 20 | L:AFM/H:LAU IN | 308-24 |
| 314-2 | H.W. CONTROL T2 OUT | 21 | H.W. CONTROL T3 OUT | 314-3 |
| 308-16 | VIDEO WITH VITC IN (00) | 22 | VIDEO WITH VITC IN (01) | |
| 308-18 | L:EMERGENCY IN | 23 | INTERPOLATE CTL IN | 308-19 |
| 308-21 | Y SYNC IN | 24 | SV SYNC IN | 308-22 |
| 307-9, 302-4C | EDIT CTL IN | 25 | TAPE DIRECTION IN | 307-8, 302-4B |
| 301-22B | LTC INT OUT | 26 | VITC INT OUT | 301-22C |
| | —— | 27 | —— | |
| 301-27B | L:HUMID OUT | 28 | L:TAPE BEGIN OUT | 301-27C |
| 308-30 | SV 1 OUT | 29 | SV 2 OUT | 308-31 |
| 308-33 | H:ADVANCE OFF OUT | 30 | L:TBC CONFI MODE OUT | 308-34 |
| | —— | 31 | H:COMB FILTER OFF OUT | 308-37 |
| 308-46 | L:H SHIFT INH OUT | 32 | —— | |

| C | | |
|---|---|---|
| +12V, +5V, +9V, +14V, UNREG | GND | 1 |
| | REG +12V IN | 2 |
| | REG +5V IN | 3 |
| | UNREG +9V IN | 4 |
| | UNREG +14V IN | 5 |
| | UNREG GND | 6 |
| | —— | 7 |
| 310-9 | L:EXT.KEY BOARD TEST OUT | 8 |
| 311-4 | CONDENSATION SENSOR IN | 9 |
| | GND | 10 |
| | GND | 11 |
| | GND | 12 |
| | GND | 13 |
| | GND | 14 |
| | —— | 15 |
| | —— | 16 |
| 308-40 | DL PB Y IN | 17 |
| 308-12, 301-32C | 1/2 VD IN | 18 |
| 308-15 | C COUNT H IN | 19 |
| 314-1 | H.W. CONTROL T1 OUT | 20 |
| 314-4 | H.W. CONTROL CT OUT | 21 |
| 308-17 | L:Y DROPOUT IN | 22 |
| 308-20 | L:TIME CODE EXIST IN | 23 |
| 308-23 | READER TIME CODE IN | 24 |
| 301-22A | TIME CODE GEN INT OUT | 25 |
| | —— | 26 |
| | —— | 27 |
| 301-28A | L:TAPE END OUT | 28 |
| 308-32 | L:REC OUT | 29 |
| | —— | 30 |
| 308-38 | H:SERVO REF HOLD OUT | 31 |
| | —— | 32 |

CN304

| | A | | B | |
|---|---|---|---|---|
| 307-23 | H:F.FWD MODE OUT | 1 | H:REW MODE OUT | 307-24 |
| 307-26 | L:METAL/H:OXIDE OUT | 2 | L:DT HEAD/H:RP HEAD OUT | 307-27 |
| 307-29 | L:NOISELESS PB OUT | 3 | —— | |
| | —— | 4 | H:IN PHASE OUT | 307-33 |
| 301-29B | INT KEY SERIAL STATUS OUT | 5 | REF FIRST FIELD IN | 307-34 |
| 307-36 | PB B-Y FP1 IN | 6 | PB B-Y FP2 IN | 307-37 |
| 308-41 | L:DET NG IN | 7 | —— | |
| | —— | 8 | H:EXT SYNC DET IN | 307-41 |
| | —— | 9 | —— | |
| | —— | 10 | —— | |
| 315-3 | H:CASSETTE DOWN 1 IN | 11 | H:CASSETTE DOWN 2 IN | 315-4 |
| 315-6 | L:LARGE/H:SMALL IN | 12 | L:COMPARTMENT EXIST IN | 315-7 |
| 311-5 | H:L-POSITION IN | 13 | H:S-POSITION IN | 311-6 |
| 309-5 | THREAD END IN | 14 | THREAD/UNTHREAD END IN | 309-6, 307-50 |
| 309-7 | PINCH SOL STARTER OUT | 15 | PINCH SOL HOLDER OUT | 309-8 |
| 312-1 | POSITION MOTOR (-) OUT | 16 | POSITION MOTOR (-) OUT | 312-1 |
| 312-3 | POSITION MOTOR (+) OUT | 17 | POSITION MOTOR (+) OUT | 312-3 |
| 315-10 | UP/DOWN MOTOR (-) OUT | 18 | UP/DOWN MOTOR (-) OUT | 315-10 |
| 315-11 | UP/DOWN MOTOR (+) OUT | 19 | UP/DOWN MOTOR (+) OUT | 315-11 |
| 307-48 | L:AFM/H:LAU CONTROL OUT | 20 | L:LARGE HUB IN | 311-8 |
| 302-21A | DATA BUS 7 IN/OUT | 21 | L:EXP RESET IN | 302-21B |
| 302-22A | DATA BUS 6 IN/OUT | 22 | H:AUTO STEREO OUT | 302-22B |
| 302-23A | DATA BUS 5 IN/OUT | 23 | —— | 302-23B |
| 302-24A | DATA BUS 4 IN/OUT | 24 | ADDRESS BUS 4 IN | 302-24B |
| 302-25A | DATA BUS 3 IN/OUT | 25 | ADDRESS BUS 3 IN | 302-25B |
| 302-26A | DATA BUS 2 IN/OUT | 26 | ADDRESS BUS 2 IN | 302-26B |
| 302-27A | DATA BUS 1 IN/OUT | 27 | ADDRESS BUS 1 IN | 302-27B |
| 302-28A | DATA BUS 0 IN/OUT | 28 | ADDRESS BUS 0 IN | 302-28B |
| -17V ◆ | UNREG -17V IN | 29 | UNREG -17V IN | -17V ◆ |
| -5V ● | REG -5V IN | 30 | REG -5V IN | -5V ● |
| -12V ▶ | REG -12V IN | 31 | REG -12V IN | -12V ▶ |
| | GND | 32 | GND | |

| C | | |
|---|---|---|
| 307-25 | H:CHROMA MUTE OUT | 1 |
| 307-28 | H:NORMAL FWD OUT | 2 |
| | —— | 3 |
| 301-29A, 310-7 | KEY SERIAL COMMAND IN | 4 |
| 307-35 | VIDEO OUT 1ST FIELD IN | 5 |
| 308-47 | L:VISC EXIST IN | 6 |
| | —— | 7 |
| 307-42 | L:BH ADVANCE OFF IN | 8 |
| | —— | 9 |
| | —— | 10 |
| 315-5 | H:CASSETTE IN 1 IN | 11 |
| 315-8 | H:CASSETTE IN 2 IN | 12 |
| 311-7 | L:METAL/H:OXIDE IN | 13 |
| 315-9 | L:CASSETTE LAMP ON OUT | 14 |
| 309-9 | CLEANING SOL HOLDER OUT | 15 |
| 312-2 | T-BRAKE SOL STARTER OUT | 16 |
| 312-4 | T-BRAKE SOL HOLDER OUT | 17 |
| 312-5 | S-BRAKE SOL STARTER OUT | 18 |
| 312-6 | S-BRAKE SOL HOLDER OUT | 19 |
| 311-9 | L:THICKNESS TAPE IN | 20 |
| 302-21C | L:CS VITC READER IN | 21 |
| 302-22C | L:CS LTC READER IN | 22 |
| | —— | 23 |
| 302-24C | L:CS MECH I/O IN | 24 |
| 302-25C | L:CS TC I/O IN | 25 |
| 302-26C | L:CS VIDEO I/O IN | 26 |
| 302-27C | L:RD IN | 27 |
| 302-28C | L:WR IN | 28 |
| -17V ◆ | UNREG -17V IN | 29 |
| -5V ● | REG -5V IN | 30 |
| -12V ▶ | REG -12V IN | 31 |
| | GND | 32 |

CN318

| | | |
|---|---|---|
| 301-19A | L:STAND-BY ON STATUS OUT | 1 |
| 301-19B | L:NOMAL PLAY STATUS OUT | 2 |
| 301-19C | L:CASSETTE IN STATUS OUT | 3 |

CN309

| | | | |
|---|---|---|---|
| +5V ○ | REG +5V OUT | 1 | PTC-15, 871-4 |
| | GND | 2 | PTC-15, 871-2 |
| 303-13A | TAPE END SENSOR IN (00) | 3 | PD-35, 854-1 |
| 303-13B | TAPE END SENSOR IN (01) | 4 | PD-35, 854-2 |
| 307-49, 304-14A | L:THREAD END IN | 5 | PTC-15, 871-3 |
| 307-50, 304-14B | L:THREAD/UNTHREAD END IN | 6 | PTC-15, 871-1 |
| 304-15A | PINCH SOL STARTER OUT | 7 | PD-35, 854-4 |
| 304-15B | PINCH SOL HOLDER OUT | 8 | PD-35, 854-5 |
| 304-15C | CLEANING SOL HOLDER OUT | 9 | PD-35, 854-6 |
| +14V ○ | UNREG +14V OUT | 10 | PD-35, 854-3 |

CN310

| | | | |
|---|---|---|---|
| UNREG | UNREG GND | 1 | EXT. KEYBOARD |
| | UNREG GND | 2 | EXT. KEYBOARD |
| | UNREG GND | 3 | EXT. KEYBOARD |
| +9V □ | UNREG +9V OUT | 4 | EXT. KEYBOARD |
| | UNREG +9V OUT | 5 | EXT. KEYBOARD |
| | UNREG +9V OUT | 6 | EXT. KEYBOARD |
| 301-29A, 304-4C | KEY SERIAL COMMAND OUT | 7 | EXT. KEYBOARD |
| 301-29C | EXT. KEY SERIAL STATUS IN | 8 | EXT. KEYBOARD |
| 303-8C | L:EXT KEY BOARD TEST OUT | 9 | EXT. KEYBOARD |
| | —— | 10 | EXT. KEYBOARD |

CN311

| | | | |
|---|---|---|---|
| | —— | 1 | RE-28, 820-9 |
| | —— | 2 | RE-28, 820-10 |
| | —— | 3 | RE-28, 820-11 |
| 303-9C | CONDENSATION SENSOR IN | 4 | RE-28, 820-1 |
| 304-13A | H:L-POSITION IN | 5 | RE-28, 820-5 |
| 304-13B | H:S-POSITION IN | 6 | RE-28, 820-4 |
| 304-13C | L:METAL/H:OXIDE IN | 7 | RE-28, 820-7 |
| 304-20B | L:LARGE HUB IN | 8 | RE-28, 820-6 |
| 304-20C | L:THICKNESS TAPE IN | 9 | RE-28, 820-8 |
| | GND | 10 | RE-28, 820-3 |
| +5V ○ | REG +5V OUT | 11 | RE-28, 820-2 |
| | —— | 12 | |

CN312

| | | | |
|---|---|---|---|
| 304-16AB | POSITION MOTOR (-) OUT | 1 | RE-36, 803-5 |
| 304-16C | T-BRAKE SOL STARTER OUT | 2 | RE-36, 803-3 |
| 304-17AB | POSITION MOTOR (+) OUT | 3 | RE-36, 803-6 |
| 304-17C | T-BRAKE SOL HOLDER OUT | 4 | RE-36, 803-4 |
| 304-18C | S-BRAKE SOL STARTER OUT | 5 | RE-36, 803-2 |
| 304-19C | S-BRAKE SOL HOLDER OUT | 6 | RE-36, 803-1 |

CN313

| | | | |
|---|---|---|---|
| 303-11A | TAPE BEGIN SENSOR IN (00) | 1 | TAPE BEGIN SENSOR |
| 303-11B | TAPE BEGIN SENSOR IN (01) | 2 | TAPE BEGIN SENSOR |

CN314

| | | | |
|---|---|---|---|
| 303-20C | H.W. CONTROL T1 OUT | 1 | HC-11, 461-2 |
| 303-21A | H.W. CONTROL T2 OUT | 2 | HC-11, 461-3 |
| 303-21B | H.W. CONTROL T3 OUT | 3 | HC-11, 461-5 |
| 303-21C | H.W. CONTROL CT OUT | 4 | HC-11, 461-6 |
| +5V ○ | REG +5V OUT | 5 | HC-11, 461-4 |
| | GND | 6 | HC-11, 461-1 |

CN315

| | | | |
|---|---|---|---|
| | GND | 1 | CL-14, 331-5 |
| +12V ▷ | REG +12V OUT | 2 | CL-14, 331-4 |
| 304-11A | H:CASSETTE DOWN 1 IN | 3 | CL-14, 331-7 |
| 304-11B | H:CASSETTE DOWN 2 IN | 4 | CL-14, 331-8 |
| 304-11C | H:CASSETTE IN 1 IN | 5 | CL-14, 331-2 |
| 304-12A | L:LARGE/H:SMALL IN | 6 | CL-14, 331-1 |
| 304-12B | L:COMPARTMENT EXIST IN | 7 | CL-14, 331-6 |
| 304-12C | H:CASSETTE IN 2 IN | 8 | CL-14, 331-3 |
| 304-14C | L:CASSETTE LAMP ON OUT | 9 | CL-14, 331-9 |
| 304-18A, 18B | UP/DOWN MOTOR (-) OUT | 10 | CL-14, 331-11 |
| 304-19A, 19B | UP/DOWN MOTOR (+) OUT | 11 | CL-14, 331-12 |
| UNREG | UNREG GND | 12 | CL-14, 331-10 |

CN316

| | | | |
|---|---|---|---|
| -12V ▶ | ERG -12V IN | 1 | MB-191, 214-1 |
| -5V ● | REG -5V IN | 2 | MB-191, 214-2 |
| UNREG | UNREG GND | 3 | MB-191, 214-3 |
| UNREG | UNREG GND | 4 | MB-191, 214-4 |
| +14V ○ | UNREG +14V IN | 5 | MB-191, 214-5 |
| +9V □ | UNREG +9V IN | 6 | MB-191, 214-6 |
| +5V ○ | REG +5V IN | 7 | MB-191, 214-7 |
| +12V ▷ | REG +12V IN | 8 | MB-191, 214-8 |
| | GND | 9 | MB-191, 214-9 |
| | GND | 10 | MB-191, 214-10 |

CN307

| | | | |
|---|---|---|---|
| MB-191, 211-1 | H:REC SERIAL REQUEST OUT | 1 | 302-1A |
| MB-191, 211-2 | H:SY/REC READY IN | 2 | 302-1B |
| MB-191, 211-3 | SY/REC SERIAL COMMAND OUT | 3 | 302-1C |
| MB-191, 211-4 | SY/REC SERIAL STATUS IN | 4 | 302-2A |
| MB-191, 211-5 | SY/REC SERIAL CLOCK IN | 5 | 302-2B |
| MB-191, 211-6 | H:SY SERIAL REQUEST OUT | 6 | 302-3A |
| MB-191, 211-7 | SY RESET COMMAND OUT | 7 | 302-4A |
| MB-191, 211-8 | TAPE DIRECTION IN | 8 | 302-4B, 303-25B |
| MB-191, 211-9 | EDIT CTL IN | 9 | 302-4C, 303-25A |
| MB-191, 211-10 | L:AUDIO NR IN | 10 | 302-5A |
| MB-191, 211-11 | L:AUDIO NR LAMP OUT | 11 | 302-5B |
| MB-191, 211-12 | L:VITC LAMP OUT | 12 | 302-5C |
| MB-191, 211-13 | L:LTC LAMP OUT | 13 | 302-7A |
| MB-191, 211-14 | L:AUTO OFF LAMP OUT | 14 | 302-7B |
| MB-191, 211-15 | L:COMPOSITE DT OUT | 15 | 302-7C |
| MB-191, 211-16 | L:FAST/H:AUDIO ATT OUT | 16 | 302-8A |
| MB-191, 211-17 | L:AUDIO MUTE OUT | 17 | 302-8B |
| MB-191, 211-18 | L:AUDIO NR ON OUT | 18 | 302-8C |
| MB-191, 211-19 | H:AFM MUTE OUT | 19 | 302-9A |
| MB-191, 211-20 | REF HD IN | 20 | 302-11B |
| MB-191, 211-21 | CHARACTER SIGNAL OUT | 21 | 302-12A |
| MB-191, 211-22 | CHARACTER GATE OUT | 22 | 302-12B |
| MB-191, 211-23 | H:F.FWD MODE OUT | 23 | 304-1A |
| MB-191, 211-24 | H:REW MODE OUT | 24 | 304-1B |
| MB-191, 211-25 | H:CHROMA MUTE OUT | 25 | 304-1C |
| MB-191, 211-26 | L:METAL/H:OXIDE OUT | 26 | 304-2A |
| MB-191, 211-27 | L:DT HEAD/H:RP HEAD OUT | 27 | 304-2B |
| MB-191, 211-28 | H:NORMAL FWD OUT | 28 | 304-2C |
| MB-191, 211-29 | L:NOISELESS PB OUT | 29 | 304-3A |
| MB-191, 211-30 | —— | 30 | 304-3C |
| MB-191, 211-31 | B-Y ID OUT | 31 | |
| MB-191, 211-32 | —— | 32 | |
| MB-191, 211-33 | H:IN PHASE OUT | 33 | 304-4B |
| MB-191, 211-34 | REF FIRST FIELD IN | 34 | 304-5B |
| MB-191, 211-35 | VIDEO OUT 1ST FIELD IN | 35 | 304-5C |
| MB-191, 211-36 | PB B-Y FP1 IN | 36 | 304-6A |
| MB-191, 211-37 | PB B-Y FP2 IN | 37 | 304-6B |
| MB-191, 211-38 | —— | 38 | |
| MB-191, 211-39 | —— | 39 | |
| MB-191, 211-40 | —— | 40 | |
| MB-191, 211-41 | H:EXT SYNC DET IN | 41 | 304-8B |
| MB-191, 211-42 | L:BH ADVANCE OFF IN | 42 | 304-8C |
| MB-191, 211-43 | —— | 43 | |
| MB-191, 211-44 | —— | 44 | |
| MB-191, 211-45 | —— | 45 | |
| MB-191, 211-46 | —— | 46 | |
| MB-191, 211-47 | —— | 47 | |
| MB-191, 211-48 | L:AFM/H:LAU CONTROL OUT | 48 | 304-20A |
| MB-191, 211-49 | L:THREAD END OUT | 49 | 304-14A, 309-5 |
| MB-191, 211-50 | L:THREAD/UNTHREAD END OUT | 50 | 304-14B, 309-6 |

CN308

| | | | |
|---|---|---|---|
| MB-191, 212-1 | SYNCHROMIX DET OUT | 1 | 306-33 |
| MB-191, 212-2 | STANDBY OFF STATUS OUT | 2 | 301-19A |
| MB-191, 212-3 | L:MDR PLAY STATUS OUT | 3 | 301-19B |
| MB-191, 212-4 | L:CASSETTE IN STATUS OUT | 4 | 301-19C |
| MB-191, 212-5 | L:REMOTE-1 IN | 5 | 301-23A |
| MB-191, 212-6 | L:REMOTE-2 IN | 6 | 301-23B |
| MB-191, 212-7 | —— | 7 | |
| MB-191, 212-8 | CAPSTAN LOCK 4F IN | 8 | 301-31A |
| MB-191, 212-9 | CAPSTAN LOCK 2/4F IN | 9 | 301-31B |
| MB-191, 212-10 | CAPSTAN LOCK 2F IN | 10 | 301-31C |
| MB-191, 212-11 | —— | 11 | |
| MB-191, 212-12 | 1/2 VD IN | 12 | 301-32C, 303-18C |
| MB-191, 212-13 | REF VD IN | 13 | 302-11A, 303-19A |
| MB-191, 212-14 | Y COUNT H IN | 14 | 303-19B |
| MB-191, 212-15 | C COUNT H IN | 15 | 303-19C |
| MB-191, 212-16 | VIDEO WITH VITC IN | 16 | 303-22A |
| MB-191, 212-17 | L:Y DROPOUT IN | 17 | 303-22C |
| MB-191, 212-18 | L:EMERGENCY IN | 18 | 303-23A |
| MB-191, 212-19 | INTERPOLATE CTL IN | 19 | 303-23B |
| MB-191, 212-20 | L:TIME CODE EXIST IN | 20 | 303-23C |
| MB-191, 212-21 | Y SYNC IN | 21 | 303-24A |
| MB-191, 212-22 | SV SYNC IN | 22 | 303-24B |
| MB-191, 212-23 | READER TIME CODE IN | 23 | 303-24C |
| MB-191, 212-24 | L:AFM/H:LAU IN | 24 | 303-20B |
| MB-191, 212-25 | —— | 25 | |
| MB-191, 212-26 | —— | 26 | |
| MB-191, 212-27 | —— | 27 | |
| MB-191, 212-28 | —— | 28 | |
| MB-191, 212-29 | —— | 29 | 303-29A |
| MB-191, 212-30 | SV 1 OUT | 30 | 303-29B |
| MB-191, 212-31 | SV 2 OUT | 31 | 303-29C |
| MB-191, 212-32 | L:REC OUT | 32 | 303-30A |
| MB-191, 212-33 | H:ADVANCE OFF OUT | 33 | 303-30B |
| MB-191, 212-34 | L:TBC CONFI MODE OUT | 34 | |
| MB-191, 212-35 | —— | 35 | |
| MB-191, 212-36 | —— | 36 | |
| MB-191, 212-37 | H:COMB FILTER OFF OUT | 37 | 303-31B |
| MB-191, 212-38 | H:SERVO REF HOLD OUT | 38 | 303-31C |
| MB-191, 212-39 | L:Y IMPACT ERROR INH IN | 39 | 303-7A |
| MB-191, 212-40 | DL PB V IN | 40 | 303-17C |
| MB-191, 212-41 | L:DET NG IN | 41 | 303-7A |
| MB-191, 212-42 | —— | 42 | 304-7A |
| MB-191, 212-43 | H:AUTO STEREO OUT | 43 | 304-22B, 302-22B |
| MB-191, 212-44 | —— | 44 | |
| MB-191, 212-45 | —— | 45 | |
| MB-191, 212-46 | L:H SHIFT INH OUT | 46 | 303-32A |
| MB-191, 212-47 | L:VISC EXIST IN | 47 | 304-6C |
| MB-191, 212-48 | L:C IMPACT ERROR INH IN | 48 | 303-7B |
| MB-191, 212-49 | UNREG -17V IN | 49 | -17V ◆ |
| MB-191, 212-50 | UNREG -17V IN | 50 | |

CN317

| | | | |
|---|---|---|---|
| MB-191, 131-1 | Y-IMPACT ERROR IN (00) | 1 | 303-15A |
| MB-191, 131-2 | Y-IMPACT ERROR IN (01) | 2 | 303-15B |
| MB-191, 131-5 | C-IMPACT ERROR IN (00) | 3 | 303-16A |
| MB-191, 131-6 | C-IMPACT ERROR IN (01) | 4 | 303-16B |
| MB-191, 131-3 | Y-IMPACT ERROR OUT (00) | 5 | 303-17A |
| MB-191, 131-4 | Y-IMPACT ERROR OUT (01) | 6 | 303-17B |
| MB-191, 131-7 | C-IMPACT ERROR OUT (00) | 7 | 303-18A |
| MB-191, 131-8 | C-IMPACT ERROR OUT (01) | 8 | 303-18B |

**MB-192**
1-624-152-11 12, 13
BVW-60P

FRAME (1/5)



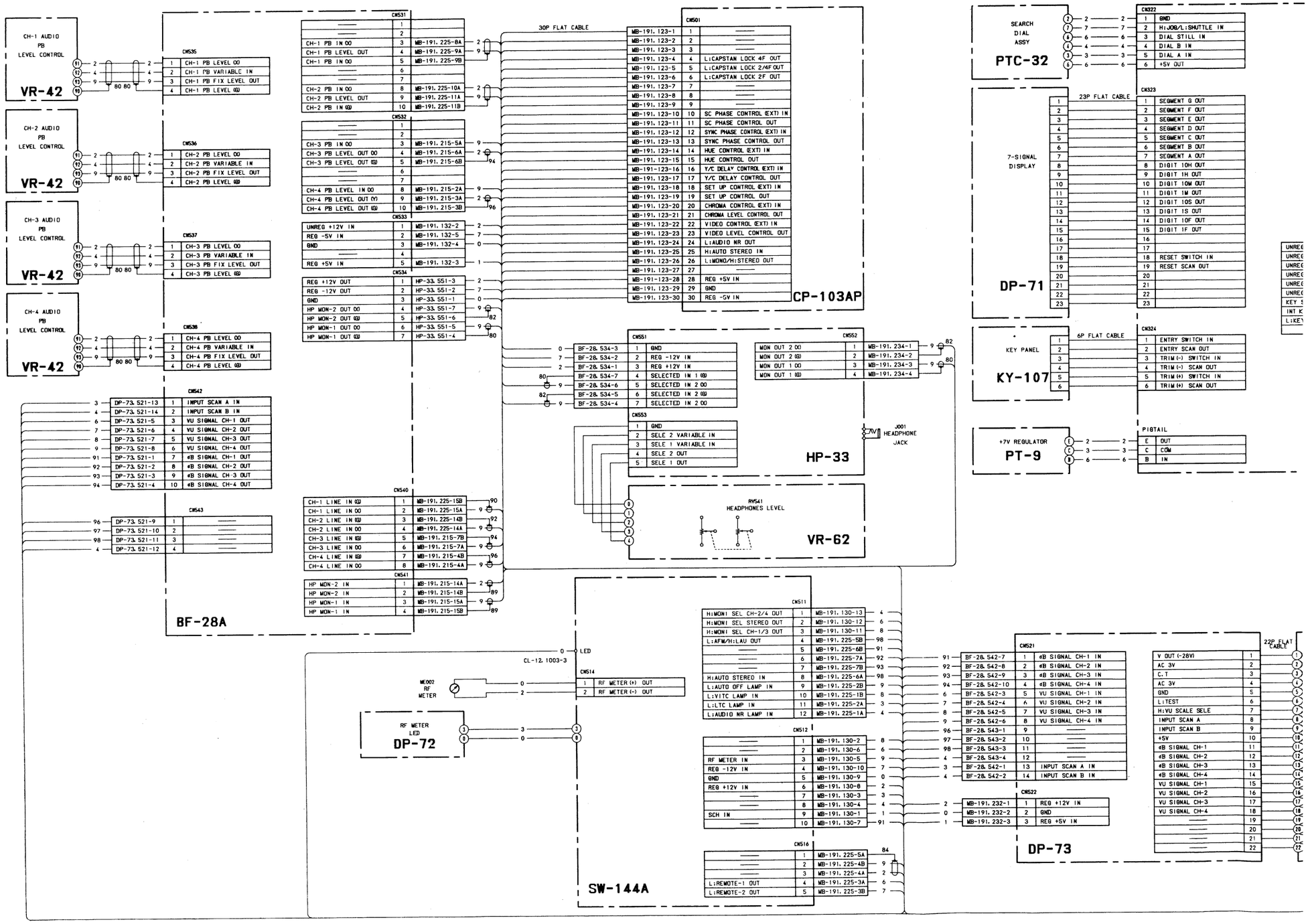
CH-1 AUDIO PB LEVEL CONTROL
VR-42
CH-2 AUDIO PB LEVEL CONTROL
VR-42
CH-3 AUDIO PB LEVEL CONTROL
VR-42
CH-4 AUDIO PB LEVEL CONTROL
VR-42
80 80
CN535
1 CH-1 PB LEVEL OO
2 CH-1 PB VARIABLE IN
3 CH-1 PB FIX LEVEL OUT
4 CH-1 PB LEVEL (G)
CN536
1 CH-2 PB LEVEL OO
2 CH-2 PB VARIABLE IN
3 CH-2 PB FIX LEVEL OUT
4 CH-2 PB LEVEL (G)
CN537
1 CH-3 PB LEVEL OO
2 CH-3 PB VARIABLE IN
3 CH-3 PB FIX LEVEL OUT
4 CH-3 PB LEVEL (G)
CN538
1 CH-4 PB LEVEL OO
2 CH-4 PB VARIABLE IN
3 CH-4 PB FIX LEVEL OUT
4 CH-4 PB LEVEL (G)
CN542
DP-73. 521-13 1 INPUT SCAN A IN
DP-73. 521-14 2 INPUT SCAN B IN
DP-73. 521-5 3 VU SIGNAL CH-1 OUT
DP-73. 521-6 4 VU SIGNAL CH-2 OUT
DP-73. 521-7 5 VU SIGNAL CH-3 OUT
DP-73. 521-8 6 VU SIGNAL CH-4 OUT
DP-73. 521-1 7 dB SIGNAL CH-1 OUT
DP-73. 521-2 8 dB SIGNAL CH-2 OUT
DP-73. 521-3 9 dB SIGNAL CH-3 OUT
DP-73. 521-4 10 dB SIGNAL CH-4 OUT
CN543
DP-73. 521-9 1
DP-73. 521-10 2
DP-73. 521-11 3
DP-73. 521-12 4
BF-28A
CN531
CH-1 PB IN OO 3 MB-191. 225-8A
CH-1 PB LEVEL OUT 4 MB-191. 225-9A
CH-1 PB IN OO 5 MB-191. 225-9B
CH-2 PB IN OO 8 MB-191. 225-10A
CH-2 PB LEVEL OUT 9 MB-191. 225-11A
CH-2 PB IN (G) 10 MB-191. 225-11B
CN532
CH-3 PB IN OO 3 MB-191. 215-5A
CH-3 PB LEVEL OUT OO 4 MB-191. 215-6A
CH-3 PB LEVEL OUT (G) 5 MB-191. 215-6B
CH-4 PB LEVEL IN OO 8 MB-191. 215-2A
CH-4 PB LEVEL OUT (Y) 9 MB-191. 215-3A
CH-4 PB LEVEL OUT (G) 10 MB-191. 215-3B
CN533
UNREG +12V IN 1 MB-191. 132-2
REG -5V IN 2 MB-191. 132-5
GND 3 MB-191. 132-4
REG +5V IN 5 MB-191. 132-3
CN534
REG +12V OUT 1 HP-33. 551-3
REG -12V OUT 2 HP-33. 551-2
GND 3 HP-33. 551-1
HP MON-2 OUT OO 4 HP-33. 551-7
HP MON-2 OUT (G) 5 HP-33. 551-6
HP MON-1 OUT OO 6 HP-33. 551-5
HP MON-1 OUT (G) 7 HP-33. 551-4
CN540
CH-1 LINE IN (G) 1 MB-191. 225-15B
CH-1 LINE IN OO 2 MB-191. 225-15A
CH-2 LINE IN (G) 3 MB-191. 225-14B
CH-2 LINE IN OO 4 MB-191. 225-14A
CH-3 LINE IN (G) 5 MB-191. 215-7B
CH-3 LINE IN OO 6 MB-191. 215-7A
CH-4 LINE IN (G) 7 MB-191. 215-4B
CH-4 LINE IN OO 8 MB-191. 215-4A
CN541
HP MON-2 IN 1 MB-191. 215-14A
HP MON-2 IN 2 MB-191. 215-14B
HP MON-1 IN 3 MB-191. 215-15A
HP MON-1 IN 4 MB-191. 215-15B
30P FLAT CABLE
CN501
MB-191. 123-1 1 ——
MB-191. 123-2 2 ——
MB-191. 123-3 3 ——
MB-191. 123-4 4 L:CAPSTAN LOCK 4F OUT
MB-191. 123-5 5 L:CAPSTAN LOCK 2/4F OUT
MB-191. 123-6 6 L:CAPSTAN LOCK 2F OUT
MB-191. 123-7 7 ——
MB-191. 123-8 8 ——
MB-191. 123-9 9 ——
MB-191. 123-10 10 SC PHASE CONTROL (EXT) IN
MB-191. 123-11 11 SC PHASE CONTROL OUT
MB-191. 123-12 12 SYNC PHASE CONTROL (EXT) IN
MB-191. 123-13 13 SYNC PHASE CONTROL OUT
MB-191. 123-14 14 HUE CONTROL (EXT) IN
MB-191. 123-15 15 HUE CONTROL OUT
MB-191. 123-16 16 Y/C DELAY CONTROL (EXT) IN
MB-191. 123-17 17 Y/C DELAY CONTROL OUT
MB-191. 123-18 18 SET UP CONTROL (EXT) IN
MB-191. 123-19 19 SET UP CONTROL OUT
MB-191. 123-20 20 CHROMA CONTROL (EXT) IN
MB-191. 123-21 21 CHROMA LEVEL CONTROL OUT
MB-191. 123-22 22 VIDEO CONTROL (EXT) IN
MB-191. 123-23 23 VIDEO LEVEL CONTROL OUT
MB-191. 123-24 24 L:AUDIO NR OUT
MB-191. 123-25 25 H:AUTO STEREO IN
MB-191. 123-26 26 L:MONO/H:STEREO OUT
MB-191. 123-27 27 ——
MB-191-123-28 28 REG +5V IN
MB-191. 123-29 29 GND
MB-191. 123-30 30 REG -5V IN
CP-103AP
CN551
1 GND
2 REG -12V IN
3 REG +12V IN
4 SELECTED IN 1 (G)
5 SELECTED IN 2 OO
6 SELECTED IN 2 (G)
7 SELECTED IN 2 OO
CN552
MON OUT 2 OO 1 MB-191. 234-1
MON OUT 2 (G) 2 MB-191. 234-2
MON OUT 1 OO 3 MB-191. 234-3
MON OUT 1 (G) 4 MB-191. 234-4
CN553
1 GND
2 SELE 2 VARIABLE IN
3 SELE 1 VARIABLE IN
4 SELE 2 OUT
5 SELE 1 OUT
J001 HEADPHONE JACK
HP-33
RV541 HEADPHONES LEVEL
VR-62
CN511
H:MONI SEL CH-2/4 OUT 1 MB-191. 130-13
H:MONI SEL STEREO OUT 2 MB-191. 130-12
H:MONI SEL CH-1/3 OUT 3 MB-191. 130-11
L:AFM/H:LAU OUT 4 MB-191. 225-5B
5 MB-191. 225-6B
6 MB-191. 225-7A
7 MB-191. 225-7B
H:AUTO STEREO IN 8 MB-191. 225-6A
L:AUTO OFF LAMP IN 9 MB-191. 225-2B
L:VITC LAMP IN 10 MB-191. 225-1B
L:LTC LAMP IN 11 MB-191. 225-2A
L:AUDIO NR LAMP IN 12 MB-191. 225-1A
CN512
1 MB-191. 130-2
2 MB-191. 130-6
RF METER IN 3 MB-191. 130-5
REG -12V IN 4 MB-191. 130-10
GND 5 MB-191. 130-9
REG +12V IN 6 MB-191. 130-8
7 MB-191. 130-3
8 MB-191. 130-4
SCH IN 9 MB-191. 130-1
10 MB-191. 130-7
CN516
1 MB-191. 225-5A
2 MB-191. 225-4B
3 MB-191. 225-4A
L:REMOTE-1 OUT 4 MB-191. 225-3A
L:REMOTE-2 OUT 5 MB-191. 225-3B
SW-144A
CL-12. 1003-3 LED
CN514
1 RF METER (+) OUT
2 RF METER (-) OUT
ME002 RF METER
RF METER LED
DP-72
CN521
BF-28. 542-7 1 dB SIGNAL CH-1 IN
BF-28. 542-8 2 dB SIGNAL CH-2 IN
BF-28. 542-9 3 dB SIGNAL CH-3 IN
BF-28. 542-10 4 dB SIGNAL CH-4 IN
BF-28. 542-3 5 VU SIGNAL CH-1 IN
BF-28. 542-4 6 VU SIGNAL CH-2 IN
BF-28. 542-5 7 VU SIGNAL CH-3 IN
BF-28. 542-6 8 VU SIGNAL CH-4 IN
BF-28. 543-1 9 ——
BF-28. 543-2 10 ——
BF-28. 543-3 11 ——
BF-28. 543-4 12 ——
BF-28. 542-1 13 INPUT SCAN A IN
BF-28. 542-2 14 INPUT SCAN B IN
CN522
MB-191. 232-1 1 REG +12V IN
MB-191. 232-2 2 GND
MB-191. 232-3 3 REG +5V IN
DP-73
22P FLAT CABLE
V OUT (-28V) 1
AC 3V 2
C. T 3
AC 3V 4
GND 5
L:TEST 6
H:VU SCALE SELE 7
INPUT SCAN A 8
INPUT SCAN B 9
+5V 10
dB SIGNAL CH-1 11
dB SIGNAL CH-2 12
dB SIGNAL CH-3 13
dB SIGNAL CH-4 14
VU SIGNAL CH-1 15
VU SIGNAL CH-2 16
VU SIGNAL CH-3 17
VU SIGNAL CH-4 18
19
20
21
22
SEARCH DIAL ASSY
PTC-32
CN322
1 GND
2 H:JOG/L:SHUTTLE IN
3 DIAL STILL IN
4 DIAL B IN
5 DIAL A IN
6 +5V OUT
23P FLAT CABLE
7-SIGNAL DISPLAY
DP-71
CN323
1 SEGMENT G OUT
2 SEGMENT F OUT
3 SEGMENT E OUT
4 SEGMENT D OUT
5 SEGMENT C OUT
6 SEGMENT B OUT
7 SEGMENT A OUT
8 DIGIT 10H OUT
9 DIGIT 1H OUT
10 DIGIT 10M OUT
11 DIGIT 1M OUT
12 DIGIT 10S OUT
13 DIGIT 1S OUT
14 DIGIT 10F OUT
15 DIGIT 1F OUT
16
17
18 RESET SWITCH IN
19 RESET SCAN OUT
20
21
22
23
KEY PANEL
KY-107
6P FLAT CABLE
CN324
1 ENTRY SWITCH IN
2 ENTRY SCAN OUT
3 TRIM (-) SWITCH IN
4 TRIM (-) SCAN OUT
5 TRIM (+) SWITCH IN
6 TRIM (+) SCAN OUT
+7V REGULATOR
PT-9
PIGTAIL
E OUT
C COM
B IN

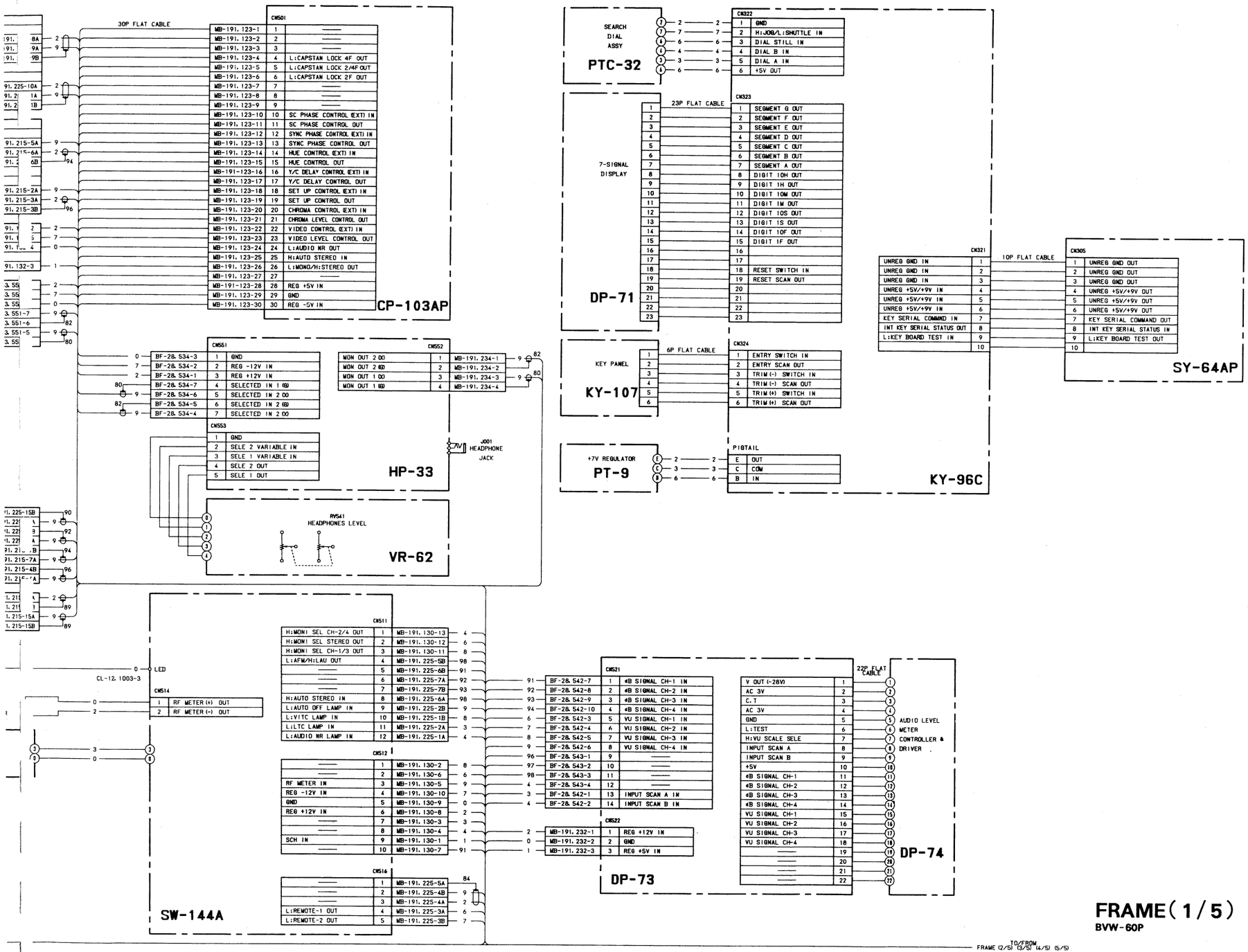


**FRAME(1/5)**
**BVW-60P**

# FRAME (2/5)

NOTE

| MARK | CHANGE INFORMATION | SERIAL NO. |
|---|---|---|
| *1 | PC-32 → PC-47 | S/N 10171 ~ |
| *2 | DELETED<br>PL001, PL002, PL003<br>ADDED<br>CL-24 | S/N 11083 ~ |

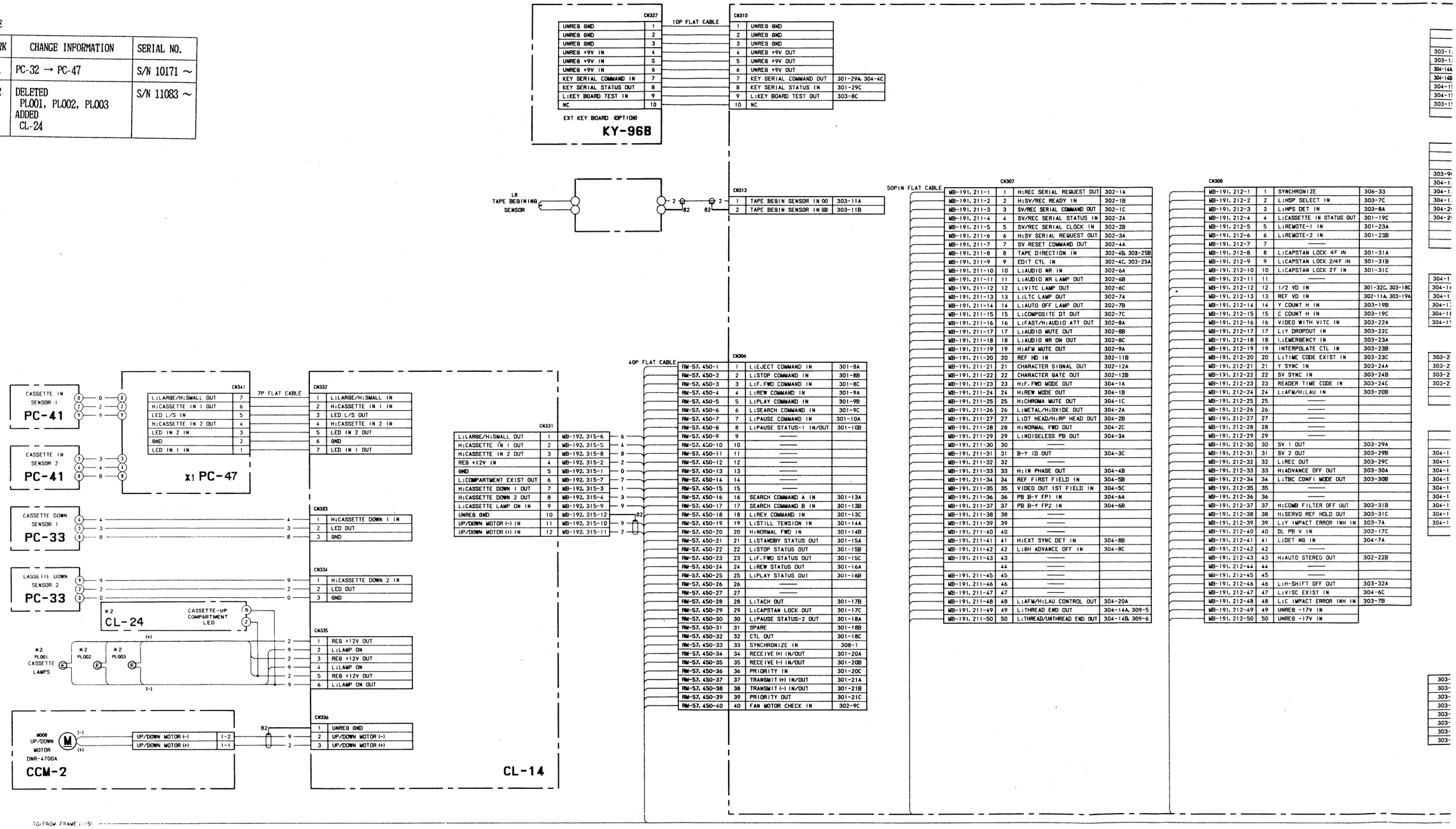




A B C D E F G H

FRAME (2/5)

CN327

| | |
|---|---|
| 1 | |
| 2 | |
| 3 | |
| 4 | |
| 5 | |
| 6 | |
| COMM IN 7 | |
| STATUS OUT 8 | |
| TEST IN 9 | |
| 10 | |

RD ( ION)
KY 96B

10P FLAT CABLE

CN310

| | | |
|---|---|---|
| 1 | UNREG GND | |
| 2 | UNREG GND | |
| 3 | UNREG GND | |
| 4 | UNREG +9V OUT | |
| 5 | UNREG +9V OUT | |
| 6 | UNREG +9V OUT | |
| 7 | KEY SERIAL COMMAND OUT | 301-29A, 304-4C |
| 8 | KEY SERIAL STATUS IN | 301-29C |
| 9 | L:KEY BOARD TEST OUT | 303-8C |
| 10 | NC | |

CN313

| | | |
|---|---|---|
| 1 | TAPE BEGIN SENSOR IN 00 | 303-11A |
| 2 | TAPE BEGIN SENSOR IN 03 | 303-11B |

50PIN FLAT CABLE

CN307

| | | | |
|---|---|---|---|
| MB-191, 211-1 | 1 | H:REC SERIAL REQUEST OUT | 302-1A |
| MB-191, 211-2 | 2 | H:SV/REC READY IN | 302-1B |
| MB-191, 211-3 | 3 | SV/REC SERIAL COMMAND OUT | 302-1C |
| MB-191, 211-4 | 4 | SV/REC SERIAL STATUS IN | 302-2A |
| MB-191, 211-5 | 5 | SV/REC SERIAL CLOCK IN | 302-2B |
| MB-191, 211-6 | 6 | H:SV SERIAL REQUEST OUT | 302-3A |
| MB-191, 211-7 | 7 | SV RESET COMMAND OUT | 302-4A |
| MB-191, 211-8 | 8 | TAPE DIRECTION IN | 302-4B, 308-2SB |
| MB-191, 211-9 | 9 | EDIT CTL IN | 302-4C, 303-25A |
| MB-191, 211-10 | 10 | L:AUDIO NR IN | 302-6A |
| MB-191, 211-11 | 11 | L:AUDIO NR LAMP OUT | 302-6B |
| MB-191, 211-12 | 12 | L:VITC LAMP OUT | 302-6C |
| MB-191, 211-13 | 13 | L:LTC LAMP OUT | 302-7A |
| MB-191, 211-14 | 14 | L:AUTO OFF LAMP OUT | 302-7B |
| MB-191, 211-15 | 15 | L:COMPOSITE DT OUT | 302-7C |
| MB-191, 211-16 | 16 | L:FAST/H:AUDIO ATT OUT | 302-8A |
| MB-191, 211-17 | 17 | L:AUDIO MUTE OUT | 302-8B |
| MB-191, 211-18 | 18 | L:AUDIO NR ON OUT | 302-8C |
| MB-191, 211-19 | 19 | H:AFM MUTE OUT | 302-9A |
| MB-191, 211-20 | 20 | REF HD IN | 302-11B |
| MB-191, 211-21 | 21 | CHARACTER SIGNAL OUT | 302-12A |
| MB-191, 211-22 | 22 | CHARACTER GATE OUT | 302-12B |
| MB-191, 211-23 | 23 | H:F. FWD MODE OUT | 304-1A |
| MB-191, 211-24 | 24 | H:REW MODE OUT | 304-1B |
| MB-191, 211-25 | 25 | H:CHROMA MUTE OUT | 304-1C |
| MB-191, 211-26 | 26 | L:METAL/H:OXIDE OUT | 304-2A |
| MB-191, 211-27 | 27 | L:DT HEAD/H:RP HEAD OUT | 304-2B |
| MB-191, 211-28 | 28 | H:NORMAL FWD OUT | 304-2C |
| MB-191, 211-29 | 29 | L:NOISELESS PB OUT | 304-3A |
| MB-191, 211-30 | 30 | ——— | |
| MB-191, 211-31 | 31 | B-Y ID OUT | 304-3C |
| MB-191, 211-32 | 32 | ——— | |
| MB-191, 211-33 | 33 | H:IN PHASE OUT | 304-4B |
| MB-191, 211-34 | 34 | REF FIRST FIELD IN | 304-5B |
| MB-191, 211-35 | 35 | VIDEO OUT 1ST FIELD IN | 304-5C |
| MB-191, 211-36 | 36 | PB B-Y FP1 IN | 304-6A |
| MB-191, 211-37 | 37 | PB B-Y FP2 IN | 304-6B |
| MB-191, 211-38 | 38 | ——— | |
| MB-191, 211-39 | 39 | ——— | |
| MB-191, 211-40 | 40 | ——— | |
| MB-191, 211-41 | 41 | H:EXT SYNC DET IN | 304-8B |
| MB-191, 211-42 | 42 | L:BH ADVANCE OFF IN | 304-8C |
| MB-191, 211-43 | 43 | ——— | |
| | 44 | ——— | |
| MB-191, 211-45 | 45 | ——— | |
| MB-191, 211-46 | 46 | ——— | |
| MB-191, 211-47 | 47 | ——— | |
| MB-191, 211-48 | 48 | L:AFM/H:LAU CONTROL OUT | 304-20A |
| MB-191, 211-49 | 49 | L:THREAD END OUT | 304-14A, 309-5 |
| MB-191, 211-50 | 50 | L:THREAD/UNTHREAD END OUT | 304-14B, 309-6 |

CN308

| | | | |
|---|---|---|---|
| MB-191, 212-1 | 1 | SYNCHRONIZE | 306-33 |
| MB-191, 212-2 | 2 | L:HSP SELECT IN | 303-7C |
| MB-191, 212-3 | 3 | L:HPS DET IN | 303-8A |
| MB-191, 212-4 | 4 | L:CASSETTE IN STATUS OUT | 301-19C |
| MB-191, 212-5 | 5 | L:REMOTE-1 IN | 301-23A |
| MB-191, 212-6 | 6 | L:REMOTE-2 IN | 301-23B |
| MB-191, 212-7 | 7 | ——— | |
| MB-191, 212-8 | 8 | L:CAPSTAN LOCK 4F IN | 301-31A |
| MB-191, 212-9 | 9 | L:CAPSTAN LOCK 2/4F IN | 301-31B |
| MB-191, 212-10 | 10 | L:CAPSTAN LOCK 2F IN | 301-31C |
| MB-191, 212-11 | 11 | ——— | |
| MB-191, 212-12 | 12 | 1/2 VD IN | 301-32C, 303-18C |
| MB-191, 212-13 | 13 | REF VD IN | 302-11A, 303-19A |
| MB-191, 212-14 | 14 | Y COUNT H IN | 303-19B |
| MB-191, 212-15 | 15 | C COUNT H IN | 303-19C |
| MB-191, 212-16 | 16 | VIDEO WITH VITC IN | 303-22A |
| MB-191, 212-17 | 17 | L:Y DROPOUT IN | 303-22C |
| MB-191, 212-18 | 18 | L:EMERGENCY IN | 303-23A |
| MB-191, 212-19 | 19 | INTERPOLATE CTL IN | 303-23B |
| MB-191, 212-20 | 20 | L:TIME CODE EXIST IN | 303-23C |
| MB-191, 212-21 | 21 | Y SYNC IN | 303-24A |
| MB-191, 212-22 | 22 | SV SYNC IN | 303-24B |
| MB-191, 212-23 | 23 | READER TIME CODE IN | 303-24C |
| MB-191, 212-24 | 24 | L:AFM/H:LAU IN | 303-20B |
| MB-191, 212-25 | 25 | ——— | |
| MB-191, 212-26 | 26 | ——— | |
| MB-191, 212-27 | 27 | ——— | |
| MB-191, 212-28 | 28 | ——— | |
| MB-191, 212-29 | 29 | ——— | |
| MB-191, 212-30 | 30 | SV 1 OUT | 303-29A |
| MB-191, 212-31 | 31 | SV 2 OUT | 303-29B |
| MB-191, 212-32 | 32 | L:REC OUT | 303-29C |
| MB-191, 212-33 | 33 | H:ADVANCE OFF OUT | 303-30A |
| MB-191, 212-34 | 34 | L:TBC CONFI MODE OUT | 303-30B |
| MB-191, 212-35 | 35 | ——— | |
| MB-191, 212-36 | 36 | ——— | |
| MB-191, 212-37 | 37 | H:COMB FILTER OFF OUT | 303-31B |
| MB-191, 212-38 | 38 | H:SERVO REF HOLD OUT | 303-31C |
| MB-191, 212-39 | 39 | L:Y IMPACT ERROR INH IN | 303-7A |
| MB-191, 212-40 | 40 | DL PB V IN | 303-17C |
| MB-191, 212-41 | 41 | L:DET NG IN | 304-7A |
| MB-191, 212-42 | 42 | ——— | |
| MB-191, 212-43 | 43 | H:AUTO STEREO OUT | 302-22B |
| MB-191, 212-44 | 44 | ——— | |
| MB-191, 212-45 | 45 | ——— | |
| MB-191, 212-46 | 46 | L:H-SHIFT OFF OUT | 303-32A |
| MB-191, 212-47 | 47 | L:VISC EXIST IN | 304-6C |
| MB-191, 212-48 | 48 | L:C IMPACT ERROR INH IN | 303-7B |
| MB-191, 212-49 | 49 | UNREG -17V IN | |
| MB-191, 212-50 | 50 | UNREG -17V IN | |

40P FLAT CABLE

CN306

| | | | |
|---|---|---|---|
| RM-57, 450-1 | 1 | L:EJECT COMMAND IN | 301-8A |
| RM-57, 450-2 | 2 | L:STOP COMMAND IN | 301-8B |
| RM-57, 450-3 | 3 | L:F. FWD COMMAND IN | 301-8C |
| RM-57, 450-4 | 4 | L:REW COMMAND IN | 301-9A |
| RM-57, 450-5 | 5 | L:PLAY COMMAND IN | 301-9B |
| RM-57, 450-6 | 6 | L:SEARCH COMMAND IN | 301-9C |
| RM-57, 450-7 | 7 | L:PAUSE COMMAND IN | 301-10A |
| RM-57, 450-8 | 8 | L:PAUSE STATUS-1 IN/OUT | 301-10B |
| RM-57, 450-9 | 9 | ——— | |
| RM-57, 450-10 | 10 | ——— | |
| RM-57, 450-11 | 11 | ——— | |
| RM-57, 450-12 | 12 | ——— | |
| RM-57, 450-13 | 13 | ——— | |
| RM-57, 450-14 | 14 | ——— | |
| RM-57, 450-15 | 15 | ——— | |
| RM-57, 450-16 | 16 | SEARCH COMMAND A IN | 301-13A |
| RM-57, 450-17 | 17 | SEARCH COMMAND B IN | 301-13B |
| RM-57, 450-18 | 18 | L:REV COMMAND IN | 301-13C |
| RM-57, 450-19 | 19 | L:STILL TENSION IN | 301-14A |
| RM-57, 450-20 | 20 | H:NORMAL FWD IN | 301-14B |
| RM-57, 450-21 | 21 | L:STANDBY STATUS OUT | 301-15A |
| RM-57, 450-22 | 22 | L:STOP STATUS OUT | 301-15B |
| RM-57, 450-23 | 23 | L:F. FWD STATUS OUT | 301-15C |
| RM-57, 450-24 | 24 | L:REW STATUS OUT | 301-16A |
| RM-57, 450-25 | 25 | L:PLAY STATUS OUT | 301-16B |
| RM-57, 450-26 | 26 | ——— | |
| RM-57, 450-27 | 27 | ——— | |
| RM-57, 450-28 | 28 | L:TACH OUT | 301-17B |
| RM-57, 450-29 | 29 | L:CAPSTAN LOCK OUT | 301-17C |
| RM-57, 450-30 | 30 | L:PAUSE STATUS-2 OUT | 301-18A |
| RM-57, 450-31 | 31 | SPARE | 301-18B |
| RM-57, 450-32 | 32 | CTL OUT | 301-18C |
| RM-57, 450-33 | 33 | SYNCHRONIZE IN | 308-1 |
| RM-57, 450-34 | 34 | RECEIVE (+) IN/OUT | 301-20A |
| RM-57, 450-35 | 35 | RECEIVE (-) IN/OUT | 301-20B |
| RM-57, 450-36 | 36 | PRIORITY IN | 301-20C |
| RM-57, 450-37 | 37 | TRANSMIT (+) IN/OUT | 301-21A |
| RM-57, 450-38 | 38 | TRANSMIT (-) IN/OUT | 301-21B |
| RM-57, 450-39 | 39 | PRIORITY OUT | 301-21C |
| RM-57, 450-40 | 40 | FAN MOTOR CHECK IN | 302-9C |

SY-61A CN301, CN302
SY-64AP CN303, CN304

**MB-192**

CN309

| | | | |
|---|---|---|---|
| | REG +5V OUT | 1 | PTC-15, 871-4 |
| | GND | 2 | PTC-15, 871-2 |
| 303-13A | TAPE END SENSOR IN 00 | 3 | PD-35, 854-1 |
| 303-13B | TAPE END SENSOR IN 03 | 4 | PD-35, 854-2 |
| 304-14A, 307-4B | L:THREAD END IN | 5 | PTC-15, 871-3 |
| 304-14B, 307-5D | L:THREAD/UNTHREAD END IN | 6 | PTC-15, 871-1 |
| 304-15A | PINCH SOL STARTER OUT | 7 | PD-35, 854-4 |
| 304-15B | PINCH SOL HOLDER OUT | 8 | PD-35, 854-5 |
| 303-15C | CLEANING SOL HOLDER OUT | 9 | PD-35, 854-6 |
| | UNREG +14V OUT | 10 | PD-35, 854-3 |

CN311

| | | | |
|---|---|---|---|
| | ——— | 1 | RE-28, 820-9 |
| | ——— | 2 | RE-28, 820-10 |
| | ——— | 3 | RE-28, 820-11 |
| 303-9C | CONDENSATION SENSOR IN | 4 | RE-28, 820-1 |
| 304-13A | H:L-POSITION IN | 5 | RE-28, 820-5 |
| 304-13B | H:S-POSITION IN | 6 | RE-28, 820-4 |
| 304-13C | L:METAL/H:OXIDE IN | 7 | RE-28, 820-7 |
| 304-20B | L:LARGE HUB IN | 8 | RE-28, 820-6 |
| 304-20C | L:THICKNESS TAPE IN | 9 | RE-28, 820-8 |
| | GND | 10 | RE-28, 820-3 |
| | REG +5V OUT | 11 | RE-28, 820-2 |
| | ——— | 12 | |

CN312

| | | | |
|---|---|---|---|
| 304-16A, B | POSITION MOTOR (-) OUT | 1 | RE-36, 803-5 |
| 304-16C | T-BRAKE SOL STARTER OUT | 2 | RE-36, 803-3 |
| 304-17A, B | POSITION MOTOR (+) OUT | 3 | RE-36, 803-6 |
| 304-17C | T-BRAKE SOL HOLDER OUT | 4 | RE-36, 803-4 |
| 304-18C | S-BRAKE SOL STARTER OUT | 5 | RE-36, 803-2 |
| 304-19C | S-BRAKE SOL HOLDER OUT | 6 | RE-36, 803-1 |

CN314

| | | | |
|---|---|---|---|
| 303-20C | H, M, CONTROL T1 OUT | 1 | HC-11, 461-2 |
| 303-21A | H, M, CONTROL T2 OUT | 2 | HC-11, 461-3 |
| 303-21B | H, M, CONTROL T3 OUT | 3 | HC-11, 461-5 |
| 303-21C | H, M, CONTROL CT OUT | 4 | HC-11, 461-6 |
| | REG +5V OUT | 5 | HC-11, 461-4 |
| | GND | 6 | HC-11, 461-1 |

CN315

| | | | |
|---|---|---|---|
| | GND | 1 | CL-14, 331-5 |
| | REG +12V OUT | 2 | CL-14, 331-4 |
| 304-11A | H:CASSETTE DOWN 1 IN | 3 | CL-14, 331-7 |
| 304-11B | H:CASSETTE DOWN 2 IN | 4 | CL-14, 331-8 |
| 304-11C | H:CASSETTE IN 1 IN | 5 | CL-14, 331-2 |
| 304-12A | L:LARGE/H:SMALL IN | 6 | CL-14, 331-1 |
| 304-12B | L:COMPARTMENT EXIST IN | 7 | CL-14, 331-6 |
| 304-12C | H:CASSETTE IN 2 IN | 8 | CL-14, 331-3 |
| 304-14C | L:CASSETTE LAMP ON OUT | 9 | CL-14, 331-9 |
| 304-18A, 18B | UP/DOWN MOTOR (-) OUT | 10 | CL-14, 331-11 |
| 304-19A, 19B | UP/DOWN MOTOR (+) OUT | 11 | CL-14, 331-12 |
| | UNREG GND | 12 | CL-14, 331-10 |

CN316

| | | |
|---|---|---|
| REG -12V IN | 1 | MB-191, 214-1 |
| REG -5V IN | 2 | MB-191, 214-2 |
| UNREG GND | 3 | MB-191, 214-3 |
| UNREG GND | 4 | MB-191, 214-4 |
| UNREG +14V IN | 5 | MB-191, 214-5 |
| UNREG +9V IN | 6 | MB-191, 214-6 |
| REG +5V IN | 7 | MB-191, 214-7 |
| REG +12V IN | 8 | MB-191, 214-8 |
| GND | 9 | MB-191, 214-9 |
| GND | 10 | MB-191, 214-10 |

CN317

| | | | |
|---|---|---|---|
| 303-15A | Y-IMPACT ERROR IN 00 | 1 | MB-191, 131-1 |
| 303-15B | Y-IMPACT ERROR IN 03 | 2 | MB-191, 131-2 |
| 303-16A | C-IMPACT ERROR IN 00 | 3 | MB-191, 131-5 |
| 303-16B | C-IMPACT ERROR IN 03 | 4 | MB-191, 131-6 |
| 303-17A | Y-IMPACT ERROR OUT 00 | 5 | MB-191, 131-3 |
| 303-17B | Y-IMPACT ERROR OUT 03 | 6 | MB-191, 131-4 |
| 303-18A | C-IMPACT ERROR OUT 00 | 7 | MB-191, 131-7 |
| 303-18B | C-IMPACT ERROR OUT 03 | 8 | MB-191, 131-8 |

CN450

| | | | |
|---|---|---|---|
| MB-192, 306-1 | 1 | L:EJECT COMMAND OUT | 453-5 |
| MB-192, 306-2 | 2 | L:STOP COMMAND OUT | 453-6 |
| MB-192, 306-3 | 3 | L:F. FWD COMMAND OUT | 453-2 |
| MB-192, 306-4 | 4 | L:REW COMMAND OUT | 453-4 |
| MB-192, 306-5 | 5 | L:PLAY COMMAND OUT | 453-3 |
| MB-192, 306-6 | 6 | L:SEARCH COMMAND OUT | 453-33 |
| MB-192, 306-7 | 7 | L:PAUSE COMMAND OUT | 453-7 |
| MB-192, 306-8 | 8 | L:PAUSE STATUS-1 IN/OUT | 453-17 |
| MB-192, 306-9 | 9 | ——— | |
| MB-192, 306-10 | 10 | ——— | |
| MB-192, 306-11 | 11 | ——— | |
| MB-192, 306-12 | 12 | ——— | |
| MB-192, 306-13 | 13 | ——— | |
| MB-192, 306-14 | 14 | ——— | |
| MB-192, 306-15 | 15 | ——— | |
| MB-192, 306-16 | 16 | SEARCH COMMAND A OUT | 453-24 |
| MB-192, 306-17 | 17 | SEARCH COMMAND B OUT | 453-25 |
| MB-192, 306-18 | 18 | L:REV COMMAND OUT | 453-23 |
| MB-192, 306-19 | 19 | L:STILL TENSION OUT | 453-30 |
| MB-192, 306-20 | 20 | H:NORMAL FWD OUT | 453-31 |
| MB-192, 306-21 | 21 | L:STANDBY STATUS IN | 453-15 |
| MB-192, 306-22 | 22 | L:STOP STATUS IN | 453-16 |
| MB-192, 306-23 | 23 | L:F. FWD STATUS IN | 453-12 |
| MB-192, 306-24 | 24 | L:REW STATUS IN | 453-14 |
| MB-192, 306-25 | 25 | L:PLAY STATUS IN | 453-13 |
| MB-192, 306-26 | 26 | ——— | |
| MB-192, 306-27 | 27 | ——— | |
| MB-192, 306-28 | 28 | L:TACH IN | 453-27 |
| MB-192, 306-29 | 29 | L:CAPSTAN LOCK IN | 453-28 |
| MB-192, 306-30 | 30 | L:PAUSE STATUS-2 IN | 453-32 |
| MB-192, 306-31 | 31 | SPARE | 453-34 |
| MB-192, 306-32 | 32 | CTL IN | 453-26 |
| MB-192, 306-33 | 33 | SYNCHRONIZE OUT | 453-29 |
| MB-192, 306-34 | 34 | RECEIVE (+) IN/OUT | 454-3, 455-3 |
| MB-192, 306-35 | 35 | RECEIVE (-) IN/OUT | 454-8, 455-8 |
| MB-192, 306-36 | 36 | PRIORITY OUT | 455-5 |
| MB-192, 306-37 | 37 | TRANSMIT (+) IN/OUT | 454-7, 455-7 |
| MB-192, 306-38 | 38 | TRTASMIT (-) IN/OUT | 454-2, 455-2 |
| MB-192, 306-39 | 39 | PRIORITY IN | 454-5 |
| MB-192, 306-40 | 40 | FAN MOTOR CHECK OUT | 452-2 |

CN451

| | | | |
|---|---|---|---|
| MB-191, 235-3 | 1 | UNREG GND | |
| MB-191, 235-1 | 2 | UNREG +14V IN | 452-1 |
| MB-191, 235-2 | 3 | UNREG +9V IN | 453-1 |
| MB-191, 124-8 | 4 | Y/C DELAY CONTROL (EXT) OUT | 456-13 |
| MB-191, 124-7 | 5 | REG +12V IN | 456-15 |
| MB-191, 124-9 | 6 | REG -12V IN | 456-7 |
| MB-191, 124-5 | 7 | CHROMA CONTROL (EXT) OUT | 456-6 |
| MB-191, 124-4 | 8 | SET UP CONTROL (EXT) OUT | 456-5 |
| MB-191, 124-6 | 9 | VIDEO CONTROL (EXT) OUT | 456-4 |
| MB-191, 124-1 | 10 | SC PHASE CONTROL (EXT) OUT | 456-3 |
| MB-191, 124-3 | 11 | HUE CONTROL (EXT) OUT | 456-2 |
| MB-191, 124-2 | 12 | SYNC PHASE CONTROL (EXT) OUT | 456-1 |
| MB-191, 235-4 | 13 | GND | |

CN452

| | | |
|---|---|---|
| 1 | FAN MOTOR (+) | |
| 2 | FAN MOTOR (-) | 450-40 |

M001 FAN MOTOR

**RM-57**

CN461

| | | |
|---|---|---|
| 1 | GND | |
| 2 | H M CONTROL T1 IN | |
| 3 | H M CONTROL T2 IN | |
| 4 | REG +5V | |
| 5 | H M CONTROL T3 IN | |
| 6 | H M CONTROL CT IN | |

**HC-11**

CN453 REMOTE-2 (36P)

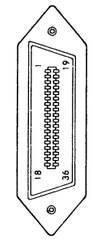

CN454 REMOTE-1 OUT (9P)

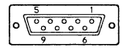

CN455 REMOTE-1 OUT (9P)

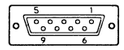

CN456 TBC REMOTE (15P)

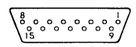

TO/FROM
FRAME (3/5) (4/5) (5/5)

# FRAME (2/5)

BVW-60P

FRAME (3/5)



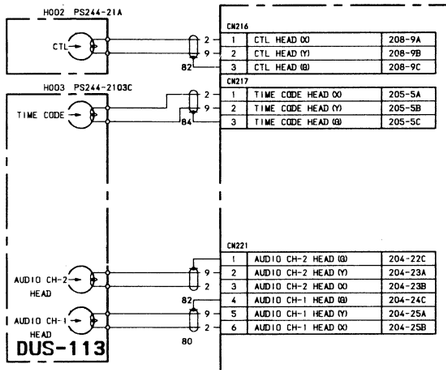


CN216

| | | |
|---|---|---|
| 1 | CTL HEAD (X) | 208-9A |
| 2 | CTL HEAD (Y) | 208-9B |
| 3 | CTL HEAD (G) | 208-9C |

CN217

| | | |
|---|---|---|
| 1 | TIME CODE HEAD (X) | 205-5A |
| 2 | TIME CODE HEAD (Y) | 205-5B |
| 3 | TIME CODE HEAD (G) | 205-5C |

CN221

| | | |
|---|---|---|
| 1 | AUDIO CH-2 HEAD (G) | 204-22C |
| 2 | AUDIO CH-2 HEAD (Y) | 204-23A |
| 3 | AUDIO CH-2 HEAD (X) | 204-23B |
| 4 | AUDIO CH-1 HEAD (G) | 204-24C |
| 5 | AUDIO CH-1 HEAD (Y) | 204-25A |
| 6 | AUDIO CH-1 HEAD (X) | 204-25B |

CN211

| | | | |
|---|---|---|---|
| MB-192, 307-1 | 1 | —— | |
| MB-192, 307-2 | 2 | H:SV/REC READY OUT | 206-23A |
| MB-192, 307-3 | 3 | SV/REC SERIAL COMMAND IN | 206-22C |
| MB-192, 307-4 | 4 | SV/REC SERIAL STATUS OUT | 206-22B |
| MB-192, 307-5 | 5 | SV/REC SERIAL CLOCK OUT | 206-23B |
| MB-192, 307-6 | 6 | H:SV SERIAL REQUEST IN | 206-10C |
| MB-192, 307-7 | 7 | SV RESET COMMAND IN | 207-21C, 208-21C |
| MB-192, 307-8 | 8 | TAPE DIRECTION OUT | 208-16A, 111-7A, 109-2B |
| MB-192, 307-9 | 9 | EDIT CTL OUT | 208-10A |
| MB-192, 307-10 | 10 | L:AUDIO NR OUT | 123-24 |
| MB-192, 307-11 | 11 | L:AUDIO NR LAMP IN | 225-1A |
| MB-192, 307-12 | 12 | L:VITC LAMP IN | 225-1B |
| MB-192, 307-13 | 13 | L:LTC LAMP IN | 225-2A |
| MB-192, 307-14 | 14 | L:AUTO OFF LAMP IN | 225-2B |
| MB-192, 307-15 | 15 | L:COMPOSITE DT IN | 205-14B |
| MB-192, 307-16 | 16 | L:FAST/H:AUDIO ATT IN | 204-14C |
| MB-192, 307-17 | 17 | L:AUDIO MUTE IN | 204-12C |
| MB-192, 307-18 | 18 | L:AUDIO NR ON IN | 204-8B |
| MB-192, 307-19 | 19 | H:AEM MUTE IN | 202-26B |
| MB-192, 307-20 | 20 | REF HD OUT | 101-20A, 102-17A |
| MB-192, 307-21 | 21 | CHARACTER SIGNAL IN | 103-17B |
| MB-192, 307-22 | 22 | CHARACTER GATE IN | 103-17A |
| MB-192, 307-23 | 23 | H:F.FWD MODE IN | 111-11B, 108-14A |
| MB-192, 307-24 | 24 | H:REW MODE IN | 111-10B, 108-14C |
| MB-192, 307-25 | 25 | H:CHROMA MUTE IN | 102-26B, 111-27A |
| MB-192, 307-26 | 26 | L:METAL/H:OXIDE IN | 111-11C, 202-27C, 205-14A, 208-20C, 109-20C |
| MB-192, 307-27 | 27 | L:DT HEAD/H:RP HEAD IN | 111-8C, 129-4 |
| MB-192, 307-28 | 28 | H:NORMAL FWD IN | 102-17C, 106-5A |
| MB-192, 307-29 | 29 | L:NOISELESS PB IN | 109-20B, 107-21C |
| MB-192, 307-30 | 30 | —— | |
| MB-192, 307-31 | 31 | —— | |
| MB-192, 307-32 | 32 | —— | |
| MB-192, 307-33 | 33 | H:IN PHASE IN | 107-20C |
| MB-192, 307-34 | 34 | REF FIRST FIELD OUT | 101-16B, 102-16B |
| MB-192, 307-35 | 35 | VIDEO OUT 1ST FIELD OUT | 102-22C |
| MB-192, 307-36 | 36 | PB B-Y FP1 OUT | 107-20A |
| MB-192, 307-37 | 37 | PB B-Y FP2 OUT | 107-20B |
| MB-192, 307-38 | 38 | —— | |
| MB-192, 307-39 | 39 | —— | |
| MB-192, 307-40 | 40 | —— | |
| MB-192, 307-41 | 41 | H:EXT SYNC DET OUT | 101-15B |
| MB-192, 307-42 | 42 | L:BH ADVANCE OFF OUT | 237-10B |
| MB-192, 307-43 | 43 | —— | |
| MB-192, 307-44 | 44 | —— | |
| MB-192, 307-45 | 45 | —— | |
| MB-192, 307-46 | 46 | —— | |
| MB-192, 307-47 | 47 | —— | |
| MB-192, 307-48 | 48 | L:AFM/H:LAU CONTROL IN | 237-15B |
| MB-192, 307-49 | 49 | L:THREAD END IN | 206-21A |
| MB-192, 307-50 | 50 | L:THREAD/UNTHREAD END IN | 206-20C |

50P FLAT CABLE

CN212

| | | | | | |
|---|---|---|---|---|---|
| 206-6B | SYNCHRONIZE IN | 1 | MB-192, 308-1 | 4 | SW-144, 511-4 |
| | —— | 2 | MB-192, 308-2 | 8 | SW-144, 511-10 |
| | —— | 3 | MB-192, 308-3 | 3 | SW-144, 511-3 |
| | —— | 4 | MB-192, 308-4 | 9 | SW-144, 511-9 |
| 225-3A | L:REMOTE-1 OUT | 5 | MB-192, 308-5 | 6 | SW-144, S16-4 |
| 225-3B | L:REMOTE-2 OUT | 6 | MB-192, 308-6 | 7 | SW-144, S16-5 |
| | —— | 7 | MB-192, 308-7 | 2 | SW-144, S16-3 |
| 123-4 | L:CAPSTAN LOCK 4F OUT | 8 | MB-192, 308-8 | 9 | SW-144, S16-2 |
| 123-5 | L:CAPSTAN LOCK 2/4F OUT | 9 | MB-192, 308-9 | 84 | SW-144, S16-1 |
| 123-6 | L:CAPSTAN LOCK 2F OUT | 10 | MB-192, 308-10 | 98 | SW-144, S11-4 |
| | —— | 11 | MB-192, 308-11 | 94 | SW-144, S11-8 |
| 208-18C, 206-18C | 1/2 VD OUT | 12 | MB-192, 308-12 | 91 | SW-144, S11-5 |
| 102-16A, 106-11A, 101-21B | REF VD OUT | 13 | MB-192, 308-13 | 92 | SW-144, S11-6 |
| 109-1C, 107-1C | Y COUNT H OUT | 14 | MB-192, 308-14 | 93 | SW-144, S11-7 |
| 109-18C, 107-18C | C COUNT H OUT | 15 | MB-192, 308-15 | 2 | BF-28, 531-3 |
| 207-6A, 111-1A | VIDEO WITH VITC OUT | 16 | MB-192, 308-16 | | |
| 111-5C, 106-15A, 102-23C | L:Y DROPOUT OUT | 17 | MB-192, 308-17 | 9 | BF-28, 531-4 |
| 206-17B | L:EMERGENCY OUT | 18 | MB-192, 308-18 | 80 | BF-28, 531-5 |
| 208-10B | INTERPOLATE CTL OUT | 19 | MB-192, 308-19 | 2 | BF-28, 531-8 |
| 205-13C | L:TIME CODE EXIST OUT | 20 | MB-192, 308-20 | | |
| | —— | 21 | MB-192, 308-21 | 9 | BF-28, 531-9 |
| 207-10A, 101-15A | SV SYNC OUT | 22 | MB-192, 308-22 | 82 | BF-28, 531-10 |
| 205-13A | READER TIME CODE OUT | 23 | MB-192, 308-23 | | |
| 225-5B | L:AFM/H:LAU OUT | 24 | MB-192, 308-24 | | |
| | —— | 25 | MB-192, 308-25 | | |
| | —— | 26 | MB-192, 308-26 | | |
| | —— | 27 | MB-192, 308-27 | 9 | BF-28, 540-8 |
| | —— | 28 | MB-192, 308-28 | 92 | BF-28, 540-7 |
| | —— | 29 | MB-192, 308-29 | 9 | BF-28, 540-6 |
| 101-8A | SV 1 IN | 30 | MB-192, 308-30 | 90 | BF-28, 540-5 |
| 101-8B | SV 2 IN | 31 | MB-192, 308-31 | | |
| 101-8C | L:REC IN | 32 | MB-192, 308-32 | 2 | SE-57, 703-1 |
| 101-9A | H:ADVANCE OFF IN | 33 | MB-192, 308-33 | 2 | SE-57, 703-2 * |
| 111-5B, 107-22C, 101-9B | L:TBC CONFI MODE IN | 34 | MB-192, 308-34 | 9 | SE-57, 703-3 |
| | —— | 35 | MB-192, 308-35 | | SE-57, 703-4 |
| | —— | 36 | MB-192, 308-36 | 4 | SE-57, 703-5 |
| 107-21A | H:COMB FILTER OFF IN | 37 | MB-192, 308-37 | 3 | SE-57, 703-6 |
| 101-10A | H:SERVO REF HOLD IN | 38 | MB-192, 308-38 | 8 | SE-57, 703-7 |
| 109-10A | L:Y IMPACT ERROR INH OUT | 39 | MB-192, 308-39 | 92 | SE-57, 703-8 |
| 107-21B | DL PB-V OUT | 40 | MB-192, 308-40 | 97 | SE-57, 703-9 |
| 107-19C | L:DET NG OUT | 41 | MB-192, 308-41 | 90 | SE-57, 703-10 |
| | —— | 42 | MB-192, 308-42 | 1 | SE-57, 703-11 |
| 123-2S, 225-6A, 233-1 | H:AUTO STEREO IN | 43 | MB-192, 308-43 | 6 | SE-57, 703-12 |
| | | 44 | MB-192, 308-44 | | |
| | | 45 | MB-192, 308-45 | 2 | TR-18, 1-1 |
| 103-28C, 107-23C, 102-20C | L:H SHIFT INH IN | 46 | MB-192, 308-46 | 2 | TR-18, 1-2 |
| 109-15C, 107-15C, 103-12C | L:VISC EXIST OUT | 47 | MB-192, 308-47 | 9 | TR-18, 1-3 |
| 109-10B | L:C IMPACT ERROR INH OUT | 48 | MB-192, 308-48 | 82 | TR-18, 1-4 |
| | UNREG -17V OUT | 49 | MB-192, 308-49 | | |
| | UNREG -17V OUT | 50 | MB-192, 308-50 | | |

CN225

| | | |
|---|---|---|
| 1A | L:AUDIO NR LAMP OUT | 211-11 |
| 1B | L:VITC LAMP OUT | 211-12 |
| 2A | L:LTC LAMP OUT | 211-13 |
| 2B | L:AUTO OFF LAMP OUT | 211-14 |
| 3A | L:REMOTE-1 IN | 212-5 |
| 3B | L:REMOTE-2 IN | 212-6 |
| 4A | V REF OUT | 206-5A, 207-5A, 208-5A |
| 4B | —— | |
| 5A | —— | |
| 5B | L:AFM/H:LAU IN | 212-24 |
| 6A | H:AUTO STEREO OUT | 123-2S, 212-4A, 233-1 |
| 6B | —— | |
| 7A | —— | |
| 7B | —— | |
| 8A | CH-1 PB OUT (X) | 204-11B |
| 8B | —— | |
| 9A | CH-1 PB LEVEL IN | 204-11A |
| 9B | CH-1 PB OUT (G) | 204-10A |
| 10A | CH-2 PB OUT (X) | 204-13B |
| 10B | —— | |
| 11A | CH-2 PB LEVEL IN | 204-13A |
| 11B | CH-2 PB OUT (G) | 204-12A |
| 12A | —— | |
| 12B | —— | |
| 13A | —— | |
| 13B | —— | |
| 14A | CH-2 LINE OUT (X) | 204-7A, 237-3A |
| 14B | CH-2 LINE OUT (G) | 204-6A, 237-3B |
| 15A | CH-1 LINE OUT (X) | 204-9A, 237-4A |
| 15B | CH-1 LINE OUT (G) | 204-8A, 237-4B |

CN226

| | | | |
|---|---|---|---|
| 1 | —— | | |
| 2 | —— | | |
| 3 | —— | | |
| 4 | —— | | |
| 5 | LOADING DIRECTION OUT | 206-10A | |
| 6 | LOADING SPEED OUT | 206-9C | |
| 7 | LOADING FG IN | 206-16C | |
| 8 | UNREG +14V OUT | | |
| 9 | UNREG -17V OUT | | |
| 10 | UNREG GND | | |
| 11 | REG +5V OUT | | |
| 12 | L:LOADING MUTE OUT | 206-8A | |

CN227

| | | |
|---|---|---|
| 1 | VCC (S-TENSION SENSOR) | 207-26A |
| 2 | S-TENSION SENSOR (+) IN | 207-26B |
| 3 | S-TENSION SENSOR (-) IN | 207-26C |
| 4 | GND (S-TENSION SENSOR) | 207-27A |

CN228

| | | | |
|---|---|---|---|
| RE-28, 811-1 | 1 | DRUM ERROR OUT | 208-15B |
| RE-28, 811-2 | 2 | DRUM CURRENT IN | 208-15C |
| RE-28, 811-3 | 3 | DRUM PHASE PG IN (X) | 208-14B |
| RE-28, 811-4 | 4 | DRUM PHASE PG IN (G) | |
| RE-28, 811-5 | 5 | DRUM SPEED PG (A) IN (X) | 208-14A |
| RE-28, 811-6 | 6 | DRUM SPEED PG (A) IN (G) | |
| RE-28, 811-7 | 7 | DRUM SPEED PG (B) IN (X) | 208-13C |
| RE-28, 811-8 | 8 | DRUM SPEED PG (B) IN (G) | |

CN213

| | | | |
|---|---|---|---|
| UNREG +14V OUT | 1 | RE-28, 814-1 | 3 |
| REG +12V OUT | 2 | RE-28, 814-2 | 2 |
| GND | 3 | RE-28, 814-3 | 0 |
| UNREG +14V OUT | 4 | RE-36, 806-1 | 3 |
| UNREG GND | 5 | RE-36, 806-2 | 90 |
| UNREG -17V OUT | 6 | RE-28, 814-3 | 8 |

CN214

| | | | |
|---|---|---|---|
| REG -12V OUT | 1 | MB-192, 316-1 | 7 |
| REG -5V OUT | 2 | MB-192, 316-2 | 6 |
| UNREG GND | 3 | MB-192, 316-3 | 90 |
| UNREG GND | 4 | MB-192, 316-4 | 90 |
| UNREG +14V OUT | 5 | MB-192, 316-5 | 3 |
| UNREG +9V OUT | 6 | MB-192, 316-6 | 9 |
| REG +5V OUT | 7 | MB-192, 316-7 | 1 |
| REG +12V OUT | 8 | MB-192, 316-8 | 2 |
| GND | 9 | MB-192, 316-9 | 0 |
| GND | 10 | MB-192, 316-10 | 0 |

CN232

| | | |
|---|---|---|
| DP-73, 522-1 | 1 | REG +12V OUT |
| DP-73, 522-2 | 2 | GND |
| DP-73, 522-3 | 3 | REG +5V OUT |

CN233

| | | | |
|---|---|---|---|
| CP-111, 415-1 | 1 | H:AUTO STEREO OUT | 123-2S, 212-4A, 225-6A |
| CP-111, 415-2 | 2 | MONITOR VR 1 OUT (G) | 234-4 |
| CP-111, 415-3 | 3 | MONITOR VR 1 OUT (X) | 234-3 |
| CP-111, 415-4 | 4 | MONITOR VR 2 OUT (G) | 234-2 |
| CP-111, 415-5 | 5 | MONITOR VR 2 OUT (X) | 234-1 |

CN234

| | | | |
|---|---|---|---|
| HP-33, 552-1 | 1 | MONITOR VR 2 IN (X) | 233-5 |
| HP-33, 552-2 | 2 | MONITOR VR 2 IN (G) | 233-4 |
| HP-33, 552-3 | 3 | MONITOR VR 1 IN (X) | 233-3 |
| HP-33, 552-4 | 4 | MONITOR VR 1 IN (G) | 233-2 |

CN215

| | | | | |
|---|---|---|---|---|
| | —— | 1A | | |
| | —— | 1B | | |
| 202-8C | CH-4 PB OUT (X) | 2A | BF-28, 532-8 | 9 |
| 202-8B | CH-4 PB OUT (G) | 2B | OPEN | 86 |
| 202-9C | CH-4 PB LEVEL IN (X) | 3A | BF-28, 532-9 | 2 |
| 202-9B | CH-4 PB LEVEL IN (G) | 3B | BF-28, 532-10 | 96 |
| 237-1A, 202-10C | CH-4 LINE OUT (X) | 4A | BF-28, 540-12 | 9 |
| 237-1B, 202-10B | CH-4 LINE OUT (G) | 4B | BF-28, 540-11 | 96 |
| 202-21C | CH-3 PB OUT (X) | 5A | BF-28, 532-3 | 9 |
| 202-21B | CH-3 PB OUT (G) | 5B | OPEN | 84 |
| 202-22C | CH-3 PB LEVEL IN (X) | 6A | BF-28, 532-4 | 2 |
| 202-22B | CH-3 PB LEVEL IN (G) | 6B | BF-28, 532-5 | 94 |
| 237-2A, 202-23C | CH-3 LINE OUT (X) | 7A | BF-28, 540-10 | 9 |
| 237-2B, 202-23B | CH-3 LINE OUT (G) | 7B | BF-28, 540-9 | 94 |
| | —— | 8A | | |
| | —— | 8B | | |
| | —— | 9A | | |
| | —— | 9B | | |
| | —— | 10A | | |
| | —— | 10B | | |
| | —— | 11A | | |
| | —— | 11B | | |
| | —— | 12A | | |
| | —— | 12B | | |
| | —— | 13A | | |
| | —— | 13B | | |
| 236-1A | CH-2 MONITOR OUT (X) | 14A | BF-28, 541-1 | 2 |
| 236-1B | CH-2 MONITOR OUT (G) | 14B | BF-28, 541-2 | 89 |
| 236-2A | CH-1 MONITOR OUT (X) | 15A | BF-28, 541-3 | 9 |
| 236-2B | CH-1 MONITOR OUT (G) | 15B | BF-28, 541-4 | 89 |

CN229

| | | | |
|---|---|---|---|
| RE-28, 813-1 | 1 | H: | |
| RE-28, 813-2 | 2 | C/ | |
| RE-28, 813-3 | 3 | C/ | |
| RE-28, 813-4 | 4 | C/ | |
| RE-28, 813-5 | 5 | VC | |
| RE-28, 813-6 | 6 | C/ | |
| RE-28, 813-7 | 7 | C/ | |
| RE-28, 813-8 | 8 | GN | |

CN230

| | | | |
|---|---|---|---|
| RE-36, 807-1 | 1 | H: | |
| RE-36, 807-2 | 2 | S- | |
| RE-36, 807-3 | 3 | S- | |
| RE-36, 807-4 | 4 | S- | |
| RE-36, 807-5 | 5 | S- | |
| RE-36, 807-6 | 6 | T- | |
| RE-36, 807-7 | 7 | T- | |
| RE-36, 807-8 | 8 | T- | |
| RE-36, 807-9 | 9 | T- | |
| RE-36, 807-10 | 10 | GN | |
| RE-36, 807-11 | 11 | GN | |
| RE-36, 807-12 | 12 | VC | |

TO/FROM FRAME (1/5) (2/5)

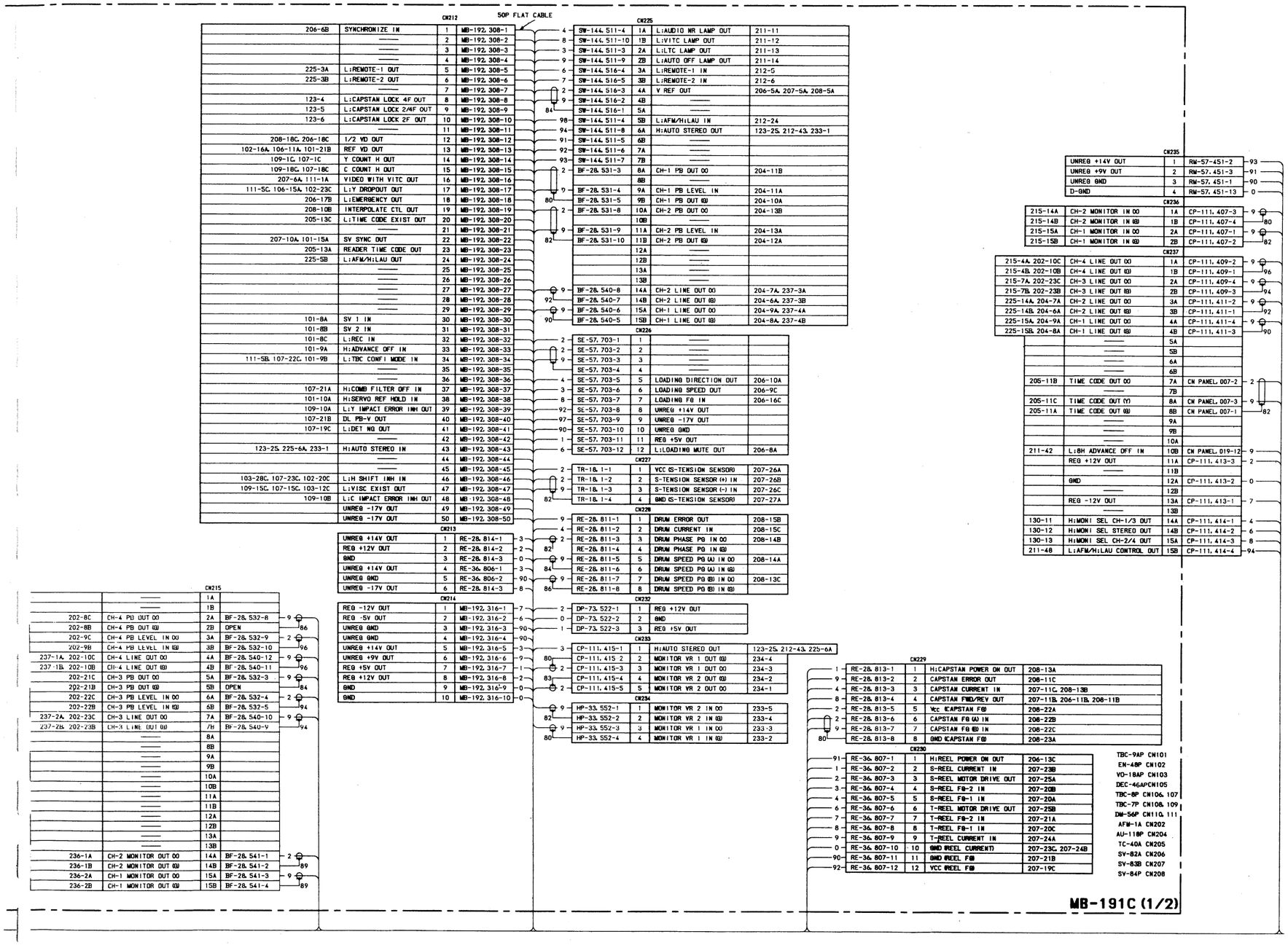
50P FLAT CABLE
CN212
206-6B | SYNCHRONIZE IN | 1 | MB-192, 308-1
——— | ——— | 2 | MB-192, 308-2
——— | ——— | 3 | MB-192, 308-3
——— | ——— | 4 | MB-192, 308-4
225-3A | L:REMOTE-1 OUT | 5 | MB-192, 308-5
225-3B | L:REMOTE-2 OUT | 6 | MB-192, 308-6
——— | ——— | 7 | MB-192, 308-7
123-4 | L:CAPSTAN LOCK 4F OUT | 8 | MB-192, 308-8
123-5 | L:CAPSTAN LOCK 2/4F OUT | 9 | MB-192, 308-9
123-6 | L:CAPSTAN LOCK 2F OUT | 10 | MB-192, 308-10
——— | ——— | 11 | MB-192, 308-11
208-18C, 206-18C | 1/2 VD OUT | 12 | MB-192, 308-12
102-16A, 106-11A, 101-21B | REF VD OUT | 13 | MB-192, 308-13
109-1C, 107-1C | Y COUNT H OUT | 14 | MB-192, 308-14
109-18C, 107-18C | C COUNT H OUT | 15 | MB-192, 308-15
207-6A, 111-1A | VIDEO WITH VITC OUT | 16 | MB-192, 308-16
111-5C, 106-15A, 102-23C | L:Y DROPOUT OUT | 17 | MB-192, 308-17
206-17B | L:EMERGENCY OUT | 18 | MB-192, 308-18
208-10B | INTERPOLATE CTL OUT | 19 | MB-192, 308-19
205-13C | L:TIME CODE EXIST OUT | 20 | MB-192, 308-20
——— | ——— | 21 | MB-192, 308-21
207-10A, 101-15A | SV SYNC OUT | 22 | MB-192, 308-22
205-13A | READER TIME CODE OUT | 23 | MB-192, 308-23
225-5B | L:AFM/H:LAU OUT | 24 | MB-192, 308-24
——— | ——— | 25 | MB-192, 308-25
——— | ——— | 26 | MB-192, 308-26
——— | ——— | 27 | MB-192, 308-27
——— | ——— | 28 | MB-192, 308-28
——— | ——— | 29 | MB-192, 308-29
101-8A | SV 1 IN | 30 | MB-192, 308-30
101-8B | SV 2 IN | 31 | MB-192, 308-31
101-8C | L:REC IN | 32 | MB-192, 308-32
101-9A | H:ADVANCE OFF IN | 33 | MB-192, 308-33
111-5B, 107-22C, 101-9B | L:TBC CONFI MODE IN | 34 | MB-192, 308-34
——— | ——— | 35 | MB-192, 308-35
——— | ——— | 36 | MB-192, 308-36
107-21A | H:COMB FILTER OFF IN | 37 | MB-192, 308-37
101-10A | H:SERVO REF HOLD IN | 38 | MB-192, 308-38
109-10A | L:Y IMPACT ERROR INH OUT | 39 | MB-192, 308-39
107-21B | DL PB-V OUT | 40 | MB-192, 308-40
107-19C | L:DET NG OUT | 41 | MB-192, 308-41
——— | ——— | 42 | MB-192, 308-42
123-2S, 225-6A, 233-1 | H:AUTO STEREO IN | 43 | MB-192, 308-43
——— | ——— | 44 | MB-192, 308-44
——— | ——— | 45 | MB-192, 308-45
103-28C, 107-23C, 102-20C | L:H SHIFT INH IN | 46 | MB-192, 308-46
109-15C, 107-15C, 103-12C | L:VISC EXIST OUT | 47 | MB-192, 308-47
109-10B | L:C IMPACT ERROR INH OUT | 48 | MB-192, 308-48
UNREG -17V OUT | | 49 | MB-192, 308-49
UNREG -17V OUT | | 50 | MB-192, 308-50
CN225
SW-144, 511-4 | 1A | L:AUDIO NR LAMP OUT | 211-11
SW-144, 511-10 | 1B | L:VITC LAMP OUT | 211-12
SW-144, 511-3 | 2A | L:LTC LAMP OUT | 211-13
SW-144, 511-9 | 2B | L:AUTO OFF LAMP OUT | 211-14
SW-144, 516-4 | 3A | L:REMOTE-1 IN | 212-5
SW-144, 516-5 | 3B | L:REMOTE-2 IN | 212-6
SW-144, 516-3 | 4A | V REF OUT | 206-5A, 207-5A, 208-5A
SW-144, 516-2 | 4B | ——— |
SW-144, 516-1 | 5A | ——— |
SW-144, 511-4 | 5B | L:AFM/H:LAU IN | 212-24
SW-144, 511-8 | 6A | H:AUTO STEREO OUT | 123-2S, 212-4J, 233-1
SW-144, 511-5 | 6B | ——— |
SW-144, 511-6 | 7A | ——— |
SW-144, 511-7 | 7B | ——— |
BF-28, 531-3 | 8A | CH-1 PB OUT 00 | 204-11B
| 8B | |
BF-28, 531-4 | 9A | CH-1 PB LEVEL IN | 204-11A
BF-28, 531-5 | 9B | CH-1 PB OUT (@) | 204-10A
BF-28, 531-8 | 10A | CH-2 PB OUT 00 | 204-13B
| 10B | |
BF-28, 531-9 | 11A | CH-2 PB LEVEL IN | 204-13A
BF-28, 531-10 | 11B | CH-2 PB OUT (@) | 204-12A
| 12A | |
| 12B | |
| 13A | |
| 13B | |
BF-28, 540-8 | 14A | CH-2 LINE OUT 00 | 204-7A, 237-3A
BF-28, 540-7 | 14B | CH-2 LINE OUT (@) | 204-6A, 237-3B
BF-28, 540-6 | 15A | CH-1 LINE OUT 00 | 204-9A, 237-4A
BF-28, 540-5 | 15B | CH-1 LINE OUT (@) | 204-8A, 237-4B
CN226
SE-57, 703-1 | 1 | ——— |
SE-57, 703-2 | 2 | ——— |
SE-57, 703-3 | 3 | ——— |
SE-57, 703-4 | 4 | ——— |
SE-57, 703-5 | 5 | LOADING DIRECTION OUT | 206-10A
SE-57, 703-6 | 6 | LOADING SPEED OUT | 206-9C
SE-57, 703-7 | 7 | LOADING FG IN | 206-16C
SE-57, 703-8 | 8 | UNREG +14V OUT |
SE-57, 703-9 | 9 | UNREG -17V OUT |
SE-57, 703-10 | 10 | UNREG GND |
SE-57, 703-11 | 11 | REG +5V OUT |
SE-57, 703-12 | 12 | L:LOADING MUTE OUT | 206-8A
CN227
TR-18, 1-1 | 1 | VCC (S-TENSION SENSOR) | 207-26A
TR-18, 1-2 | 2 | S-TENSION SENSOR (+) IN | 207-26B
TR-18, 1-3 | 3 | S-TENSION SENSOR (-) IN | 207-26C
TR-18, 1-4 | 4 | GND (S-TENSION SENSOR) | 207-27A
CN228
RE-28, 811-1 | 1 | DRUM ERROR OUT | 208-15B
RE-28, 811-2 | 2 | DRUM CURRENT IN | 208-15C
RE-28, 811-3 | 3 | DRUM PHASE PG IN 00 | 208-14B
RE-28, 811-4 | 4 | DRUM PHASE PG IN (@) |
RE-28, 811-5 | 5 | DRUM SPEED PG (A) IN 00 | 208-14A
RE-28, 811-6 | 6 | DRUM SPEED PG (A) IN (@) |
RE-28, 811-7 | 7 | DRUM SPEED PG (B) IN 00 | 208-13C
RE-28, 811-8 | 8 | DRUM SPEED PG (B) IN (@) |
CN213
UNREG +14V OUT | 1 | RE-28, 814-1
REG +12V OUT | 2 | RE-28, 814-2
GND | 3 | RE-28, 814-3
UNREG +14V OUT | 4 | RE-36, 806-1
UNREG GND | 5 | RE-36, 806-2
UNREG -17V OUT | 6 | RE-28, 814-3
CN214
REG -12V OUT | 1 | MB-192, 316-1
REG -5V OUT | 2 | MB-192, 316-2
UNREG GND | 3 | MB-192, 316-3
UNREG GND | 4 | MB-192, 316-4
UNREG +14V OUT | 5 | MB-192, 316-5
UNREG +9V OUT | 6 | MB-192, 316-6
REG +5V OUT | 7 | MB-192, 316-7
REG +12V OUT | 8 | MB-192, 316-8
GND | 9 | MB-192, 316-9
GND | 10 | MB-192, 316-10
CN232
DP-73, 522-1 | 1 | REG +12V OUT
DP-73, 522-2 | 2 | GND
DP-73, 522-3 | 3 | REG +5V OUT
CN233
CP-111, 415-1 | 1 | H:AUTO STEREO OUT | 123-2S, 212-4J, 225-6A
CP-111, 415-2 | 2 | MONITOR VR 1 OUT (@) | 234-4
CP-111, 415-3 | 3 | MONITOR VR 1 OUT 00 | 234-3
CP-111, 415-4 | 4 | MONITOR VR 2 OUT (@) | 234-2
CP-111, 415-5 | 5 | MONITOR VR 2 OUT 00 | 234-1
CN234
HP-33, 552-1 | 1 | MONITOR VR 2 IN 00 | 233-5
HP-33, 552-2 | 2 | MONITOR VR 2 IN (@) | 233-4
HP-33, 552-3 | 3 | MONITOR VR 1 IN 00 | 233-3
HP-33, 552-4 | 4 | MONITOR VR 1 IN (@) | 233-2
CN235
UNREG +14V OUT | 1 | RM-57, 451-2
UNREG +9V OUT | 2 | RM-57, 451-3
UNREG GND | 3 | RM-57, 451-1
D-GND | 4 | RM-57, 451-13
CN236
215-14A | CH-2 MONITOR IN 00 | 1A | CP-111, 407-3
215-14B | CH-2 MONITOR IN (@) | 1B | CP-111, 407-4
215-15A | CH-1 MONITOR IN 00 | 2A | CP-111, 407-1
215-15B | CH-1 MONITOR IN (@) | 2B | CP-111, 407-2
CN237
215-4A, 202-10C | CH-4 LINE OUT 00 | 1A | CP-111, 409-2
215-4B, 202-10B | CH-4 LINE OUT (@) | 1B | CP-111, 409-1
215-7A, 202-23C | CH-3 LINE OUT 00 | 2A | CP-111, 409-4
215-7B, 202-23B | CH-3 LINE OUT (@) | 2B | CP-111, 409-3
225-14A, 204-7A | CH-2 LINE OUT 00 | 3A | CP-111, 411-2
225-14B, 204-6A | CH-2 LINE OUT (@) | 3B | CP-111, 411-1
225-15A, 204-9A | CH-1 LINE OUT 00 | 4A | CP-111, 411-4
225-15B, 204-8A | CH-1 LINE OUT (@) | 4B | CP-111, 411-3
——— | ——— | 5A |
——— | ——— | 5B |
——— | ——— | 6A |
——— | ——— | 6B |
205-11B | TIME CODE OUT 00 | 7A | CN PANEL, 007-2
——— | ——— | 7B |
205-11C | TIME CODE OUT (Y) | 8A | CN PANEL, 007-3
205-11A | TIME CODE OUT (@) | 8B | CN PANEL, 007-1
——— | ——— | 9A |
——— | ——— | 9B |
——— | ——— | 10A |
211-42 | L:8H ADVANCE OFF IN | 10B | CN PANEL, 019-12
| REG +12V OUT | 11A | CP-111, 413-3
——— | ——— | 11B |
| GND | 12A | CP-111, 413-2
——— | ——— | 12B |
| REG -12V OUT | 13A | CP-111, 413-1
——— | ——— | 13B |
130-11 | H:MONI SEL CH-1/3 OUT | 14A | CP-111, 414-1
130-12 | H:MONI SEL STEREO OUT | 14B | CP-111, 414-2
130-13 | H:MONI SEL CH-2/4 OUT | 15A | CP-111, 414-3
211-48 | L:AFM/H:LAU CONTROL OUT | 15B | CP-111, 414-4
CN229
RE-28, 813-1 | 1 | H:CAPSTAN POWER ON OUT | 208-13A
RE-28, 813-2 | 2 | CAPSTAN ERROR OUT | 208-11C
RE-28, 813-3 | 3 | CAPSTAN CURRENT IN | 207-11C, 208-13B
RE-28, 813-4 | 4 | CAPSTAN FWD/REV OUT | 207-11B, 206-11B, 208-11B
RE-28, 813-5 | 5 | Vcc (CAPSTAN FG) | 208-22A
RE-28, 813-6 | 6 | CAPSTAN FG (A) IN | 208-22B
RE-28, 813-7 | 7 | CAPSTAN FG (B) IN | 208-22C
RE-28, 813-8 | 8 | GND (CAPSTAN FG) | 208-23A
CN230
RE-36, 807-1 | 1 | H:REEL POWER ON OUT | 206-13C
RE-36, 807-2 | 2 | S-REEL CURRENT IN | 207-23B
RE-36, 807-3 | 3 | S-REEL MOTOR DRIVE OUT | 207-25A
RE-36, 807-4 | 4 | S-REEL FG-2 IN | 207-20B
RE-36, 807-5 | 5 | S-REEL FG-1 IN | 207-20A
RE-36, 807-6 | 6 | T-REEL MOTOR DRIVE OUT | 207-25B
RE-36, 807-7 | 7 | T-REEL FG-2 IN | 207-21A
RE-36, 807-8 | 8 | T-REEL FG-1 IN | 207-20C
RE-36, 807-9 | 9 | T-REEL CURRENT IN | 207-24A
RE-36, 807-10 | 10 | GND (REEL CURRENT) | 207-23C, 207-24B
RE-36, 807-11 | 11 | GND (REEL FG) | 207-21B
RE-36, 807-12 | 12 | VCC (REEL FG) | 207-19C
CN215
| | 1A |
| | 1B |
202-8C | CH-4 PB OUT 00 | 2A | BF-28, 532-8
202-8B | CH-4 PB OUT (@) | 2B | OPEN
202-9C | CH-4 PB LEVEL IN 00 | 3A | BF-28, 532-9
202-9B | CH-4 PB LEVEL IN (@) | 3B | BF-28, 532-10
237-1A, 202-10C | CH-4 LINE OUT 00 | 4A | BF-28, 540-12
237-1B, 202-10B | CH-4 LINE OUT (@) | 4B | BF-28, 540-11
202-21C | CH-3 PB OUT 00 | 5A | BF-28, 532-3
202-21B | CH-3 PB OUT (@) | 5B | OPEN
202-22C | CH-3 PB LEVEL IN 00 | 6A | BF-28, 532-4
202-22B | CH-3 PB LEVEL IN (@) | 6B | BF-28, 532-5
237-2A, 202-23C | CH-3 LINE OUT 00 | 7A | BF-28, 540-10
237-2B, 202-23B | CH-3 LINE OUT (@) | 7B | BF-28, 540-9
| | 8A |
| | 8B |
| | 9A |
| | 9B |
| | 10A |
| | 10B |
| | 11A |
| | 11B |
| | 12A |
| | 12B |
| | 13A |
| | 13B |
236-1A | CH-2 MONITOR OUT 00 | 14A | BF-28, 541-1
236-1B | CH-2 MONITOR OUT (@) | 14B | BF-28, 541-2
236-2A | CH-1 MONITOR OUT 00 | 15A | BF-28, 541-3
236-2B | CH-1 MONITOR OUT (@) | 15B | BF-28, 541-4
TBC-9AP CN101
EN-48P CN102
VO-18AP CN103
DEC-46APCN105
TBC-8P CN106, 107
TBC-7P CN108, 109
DW-56P CN110, 111
AFM-1A CN202
AU-118P CN204
TC-40A CN205
SV-82A CN206
SV-83B CN207
SV-84P CN208
MB-191C (1/2)
TO/FROM FRAME (4/5) (5/5)
FRAME (3/5)
BVW-60P

# FRAME (4/5)

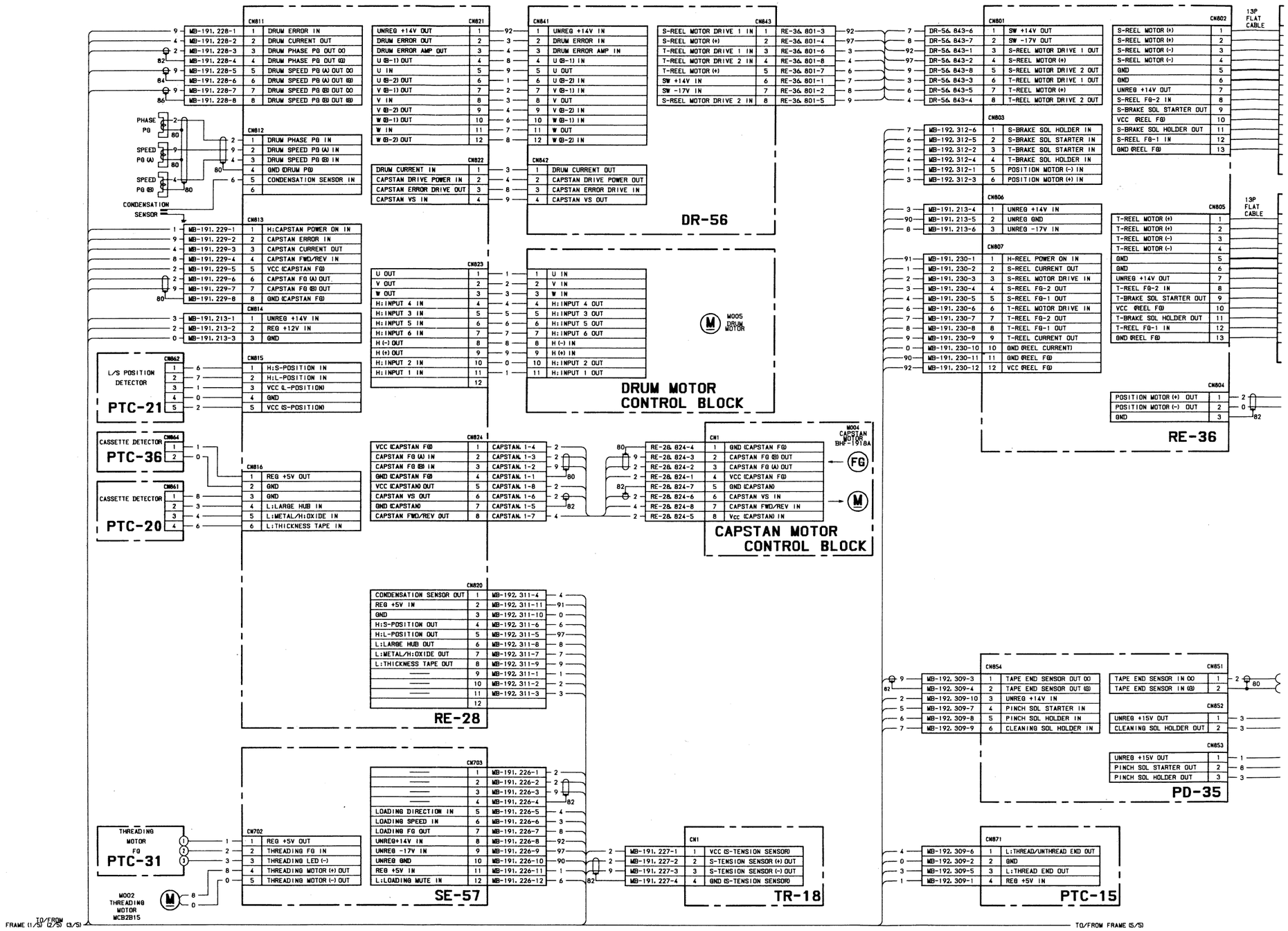
CN811
MB-191, 228-1 1 DRUM ERROR IN
MB-191, 228-2 2 DRUM CURRENT OUT
MB-191, 228-3 3 DRUM PHASE PG OUT (O)
MB-191, 228-4 4 DRUM PHASE PG OUT (E)
MB-191, 228-5 5 DRUM SPEED PG (A) OUT (O)
MB-191, 228-6 6 DRUM SPEED PG (A) OUT (E)
MB-191, 228-7 7 DRUM SPEED PG (B) OUT (O)
MB-191, 228-8 8 DRUM SPEED PG (B) OUT (E)
PHASE PG
SPEED PG (A)
SPEED PG (B)
CONDENSATION SENSOR
CN812
1 DRUM PHASE PG IN
2 DRUM SPEED PG (A) IN
3 DRUM SPEED PG (B) IN
4 GND (DRUM PG)
5 CONDENSATION SENSOR IN
6
CN813
MB-191, 229-1 1 H:CAPSTAN POWER ON IN
MB-191, 229-2 2 CAPSTAN ERROR IN
MB-191, 229-3 3 CAPSTAN CURRENT OUT
MB-191, 229-4 4 CAPSTAN FWD/REV IN
MB-191, 229-5 5 VCC (CAPSTAN FG)
MB-191, 229-6 6 CAPSTAN FG (A) OUT
MB-191, 229-7 7 CAPSTAN FG (B) OUT
MB-191, 229-8 8 GND (CAPSTAN FG)
CN814
MB-191, 213-1 1 UNREG +14V IN
MB-191, 213-2 2 REG +12V IN
MB-191, 213-3 3 GND
L/S POSITION DETECTOR
PTC-21
CN862
CN815
1 H:S-POSITION IN
2 H:L-POSITION IN
3 VCC (L-POSITION)
4 GND
5 VCC (S-POSITION)
CASSETTE DETECTOR
PTC-36
CN864
CASSETTE DETECTOR
PTC-20
CN861
CN816
1 REG +5V OUT
2 GND
3 GND
4 L:LARGE HUB IN
5 L:METAL/H:OXIDE IN
6 L:THICKNESS TAPE IN
CN821
UNREG +14V OUT 1
DRUM ERROR OUT 2
DRUM ERROR AMP OUT 3
U (B-1) OUT 4
U IN 5
U (B-2) OUT 6
V (B-1) OUT 7
V IN 8
V (B-2) OUT 9
W (B-1) OUT 10
W IN 11
W (B-2) OUT 12
CN822
DRUM CURRENT IN 1
CAPSTAN DRIVE POWER IN 2
CAPSTAN ERROR DRIVE OUT 3
CAPSTAN VS IN 4
CN823
U OUT 1
V OUT 2
W OUT 3
H:INPUT 4 IN 4
H:INPUT 3 IN 5
H:INPUT 5 IN 6
H:INPUT 6 IN 7
H (-) OUT 8
H (+) OUT 9
H:INPUT 2 IN 10
H:INPUT 1 IN 11
12
CN824
VCC (CAPSTAN FG) 1 CAPSTAN 1-4
CAPSTAN FG (A) IN 2 CAPSTAN 1-3
CAPSTAN FG (B) IN 3 CAPSTAN 1-2
GND (CAPSTAN FG) 4 CAPSTAN 1-1
VCC (CAPSTAN) OUT 5 CAPSTAN 1-8
CAPSTAN VS OUT 6 CAPSTAN 1-6
GND (CAPSTAN) 7 CAPSTAN 1-5
CAPSTAN FWD/REV OUT 8 CAPSTAN 1-7
CN820
CONDENSATION SENSOR OUT 1 MB-192, 311-4
REG +5V IN 2 MB-192, 311-11
GND 3 MB-192, 311-10
H:S-POSITION OUT 4 MB-192, 311-6
H:L-POSITION OUT 5 MB-192, 311-5
L:LARGE HUB OUT 6 MB-192, 311-8
L:METAL/H:OXIDE OUT 7 MB-192, 311-7
L:THICKNESS TAPE OUT 8 MB-192, 311-9
9 MB-192, 311-1
10 MB-192, 311-2
11 MB-192, 311-3
12
RE-28
CN703
1 MB-191, 226-1
2 MB-191, 226-2
3 MB-191, 226-3
4 MB-191, 226-4
LOADING DIRECTION IN 5 MB-191, 226-5
LOADING SPEED IN 6 MB-191, 226-6
LOADING FG OUT 7 MB-191, 226-7
UNREG+14V IN 8 MB-191, 226-8
UNREG -17V IN 9 MB-191, 226-9
UNREG GND 10 MB-191, 226-10
REG +5V IN 11 MB-191, 226-11
L:LOADING MUTE IN 12 MB-191, 226-12
SE-57
THREADING MOTOR FG
PTC-31
CN702
1 REG +5V OUT
2 THREADING FG IN
3 THREADING LED (-)
4 THREADING MOTOR (+) OUT
5 THREADING MOTOR (-) OUT
M002 THREADING MOTOR MCB2B15
CN841
1 UNREG +14V IN
2 DRUM ERROR IN
3 DRUM ERROR AMP IN
4 U (B-1) IN
5 U OUT
6 U (B-2) IN
7 V (B-1) IN
8 V OUT
9 V (B-2) IN
10 W (B-1) IN
11 W OUT
12 W (B-2) IN
CN842
1 DRUM CURRENT OUT
2 CAPSTAN DRIVE POWER OUT
3 CAPSTAN ERROR DRIVE IN
4 CAPSTAN VS OUT
DR-56
CN843
S-REEL MOTOR DRIVE 1 IN 1 RE-36, 801-3
S-REEL MOTOR (+) 2 RE-36, 801-4
T-REEL MOTOR DRIVE 1 IN 3 RE-36, 801-6
T-REEL MOTOR DRIVE 2 IN 4 RE-36, 801-8
T-REEL MOTOR (+) 5 RE-36, 801-7
SW +14V IN 6 RE-36, 801-1
SW -17V IN 7 RE-36, 801-2
S-REEL MOTOR DRIVE 2 IN 8 RE-36, 801-5
DRUM MOTOR CONTROL BLOCK
M005 DRUM MOTOR
CN1
1 GND (CAPSTAN FG)
2 CAPSTAN FG (B) OUT
3 CAPSTAN FG (A) OUT
4 VCC (CAPSTAN FG)
5 GND (CAPSTAN)
6 CAPSTAN VS IN
7 CAPSTAN FWD/REV IN
8 Vcc (CAPSTAN) IN
M004 CAPSTAN MOTOR BHF-1918A
FG
CAPSTAN MOTOR CONTROL BLOCK
CN801
1 SW +14V OUT
2 SW -17V OUT
3 S-REEL MOTOR DRIVE 1 OUT
4 S-REEL MOTOR (+)
5 S-REEL MOTOR DRIVE 2 OUT
6 T-REEL MOTOR DRIVE 1 OUT
7 T-REEL MOTOR (+)
8 T-REEL MOTOR DRIVE 2 OUT
CN803
MB-192, 312-6 1 S-BRAKE SOL HOLDER IN
MB-192, 312-5 2 S-BRAKE SOL STARTER IN
MB-192, 312-2 3 T-BRAKE SOL STARTER IN
MB-192, 312-4 4 T-BRAKE SOL HOLDER IN
MB-192, 312-1 5 POSITION MOTOR (-) IN
MB-192, 312-3 6 POSITION MOTOR (+) IN
CN806
MB-191, 213-4 1 UNREG +14V IN
MB-191, 213-5 2 UNREG GND
MB-191, 213-6 3 UNREG -17V IN
CN807
MB-191, 230-1 1 H-REEL POWER ON IN
MB-191, 230-2 2 S-REEL CURRENT OUT
MB-191, 230-3 3 S-REEL MOTOR DRIVE IN
MB-191, 230-4 4 S-REEL FG-2 OUT
MB-191, 230-5 5 S-REEL FG-1 OUT
MB-191, 230-6 6 T-REEL MOTOR DRIVE IN
MB-191, 230-7 7 T-REEL FG-2 OUT
MB-191, 230-8 8 T-REEL FG-1 OUT
MB-191, 230-9 9 T-REEL CURRENT OUT
MB-191, 230-10 10 GND (REEL CURRENT)
MB-191, 230-11 11 GND (REEL FG)
MB-191, 230-12 12 VCC (REEL FG)
CN802
13P FLAT CABLE
S-REEL MOTOR (+) 1
S-REEL MOTOR (+) 2
S-REEL MOTOR (-) 3
S-REEL MOTOR (-) 4
GND 5
GND 6
UNREG +14V OUT 7
S-REEL FG-2 IN 8
S-BRAKE SOL STARTER OUT 9
VCC (REEL FG) 10
S-BRAKE SOL HOLDER OUT 11
S-REEL FG-1 IN 12
GND (REEL FG) 13
CN805
13P FLAT CABLE
T-REEL MOTOR (+) 1
T-REEL MOTOR (+) 2
T-REEL MOTOR (-) 3
T-REEL MOTOR (-) 4
GND 5
GND 6
UNREG +14V OUT 7
T-REEL FG-2 IN 8
T-BRAKE SOL STARTER OUT 9
VCC (REEL FG) 10
T-BRAKE SOL HOLDER OUT 11
T-REEL FG-1 IN 12
GND (REEL FG) 13
CN804
POSITION MOTOR (+) OUT 1
POSITION MOTOR (-) OUT 2
GND 3
RE-36
CN854
MB-192, 309-3 1 TAPE END SENSOR OUT (O)
MB-192, 309-4 2 TAPE END SENSOR OUT (E)
MB-192, 309-10 3 UNREG +14V IN
MB-192, 309-7 4 PINCH SOL STARTER IN
MB-192, 309-8 5 PINCH SOL HOLDER IN
MB-192, 309-9 6 CLEANING SOL HOLDER IN
CN851
TAPE END SENSOR IN (O) 1
TAPE END SENSOR IN (E) 2
CN852
UNREG +15V OUT 1
CLEANING SOL HOLDER OUT 2
CN853
UNREG +15V OUT 1
PINCH SOL STARTER OUT 2
PINCH SOL HOLDER OUT 3
PD-35
CN1
MB-191, 227-1 1 VCC (S-TENSION SENSOR)
MB-191, 227-2 2 S-TENSION SENSOR (+) OUT
MB-191, 227-3 3 S-TENSION SENSOR (-) OUT
MB-191, 227-4 4 GND (S-TENSION SENSOR)
TR-18
CN871
MB-192, 309-6 1 L:THREAD/UNTHREAD END OUT
MB-192, 309-2 2 GND
MB-192, 309-5 3 L:THREAD END OUT
MB-192, 309-1 4 REG +5V IN
PTC-15
TO/FROM FRAME (1/5) (2/5) (3/5)
TO/FROM FRAME (5/5)

FRAME (4/5)

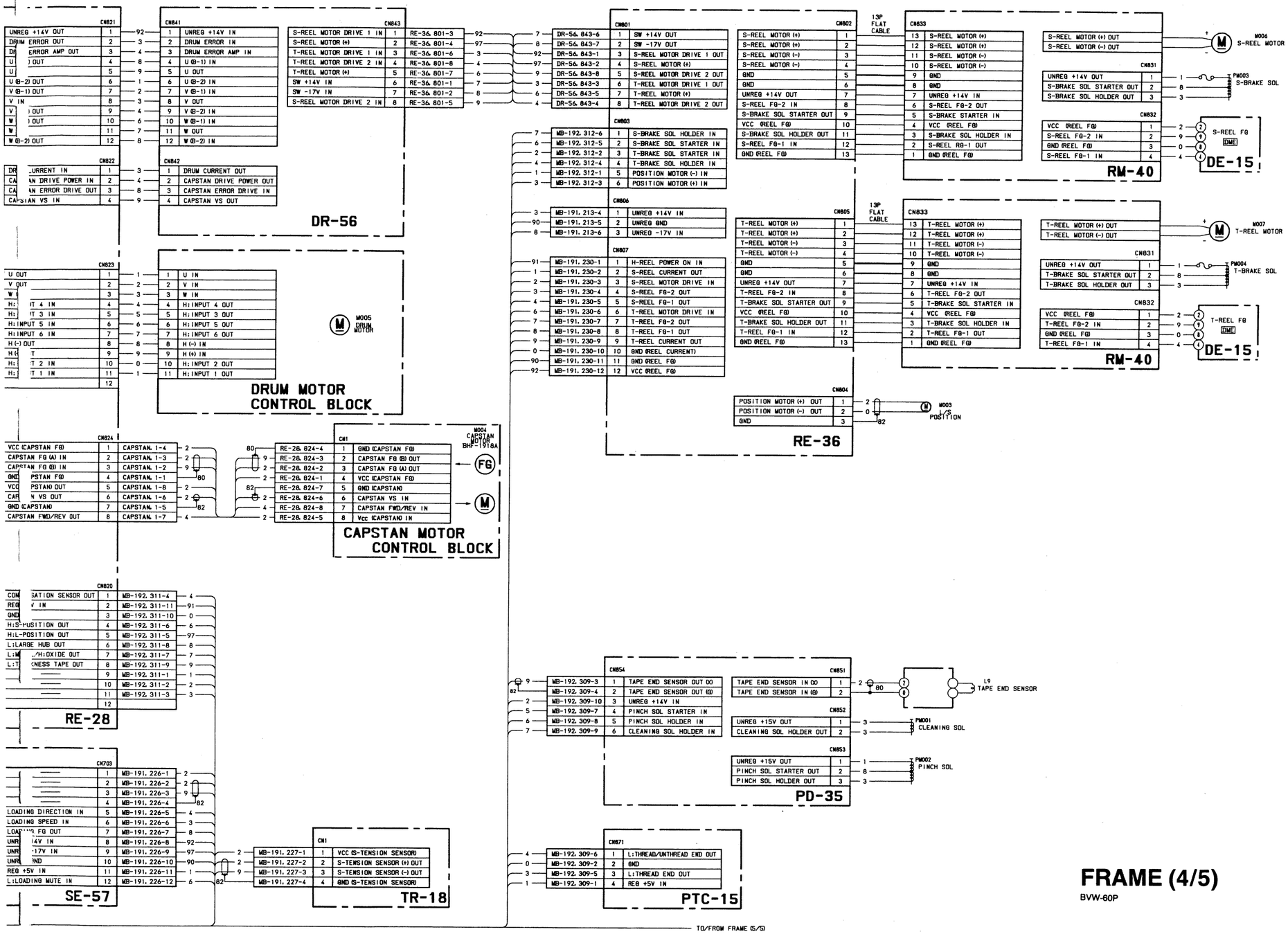


# FRAME (4/5)

BVW-60P

FRAME (5/5) FRAM

# FRAME (5/5)

NOTE

| MARK | CHANGE INFORMATION | SERIAL NO. |
|---|---|---|
| *1 | AC-81 → AC-96 | S/N 10171 ~ |

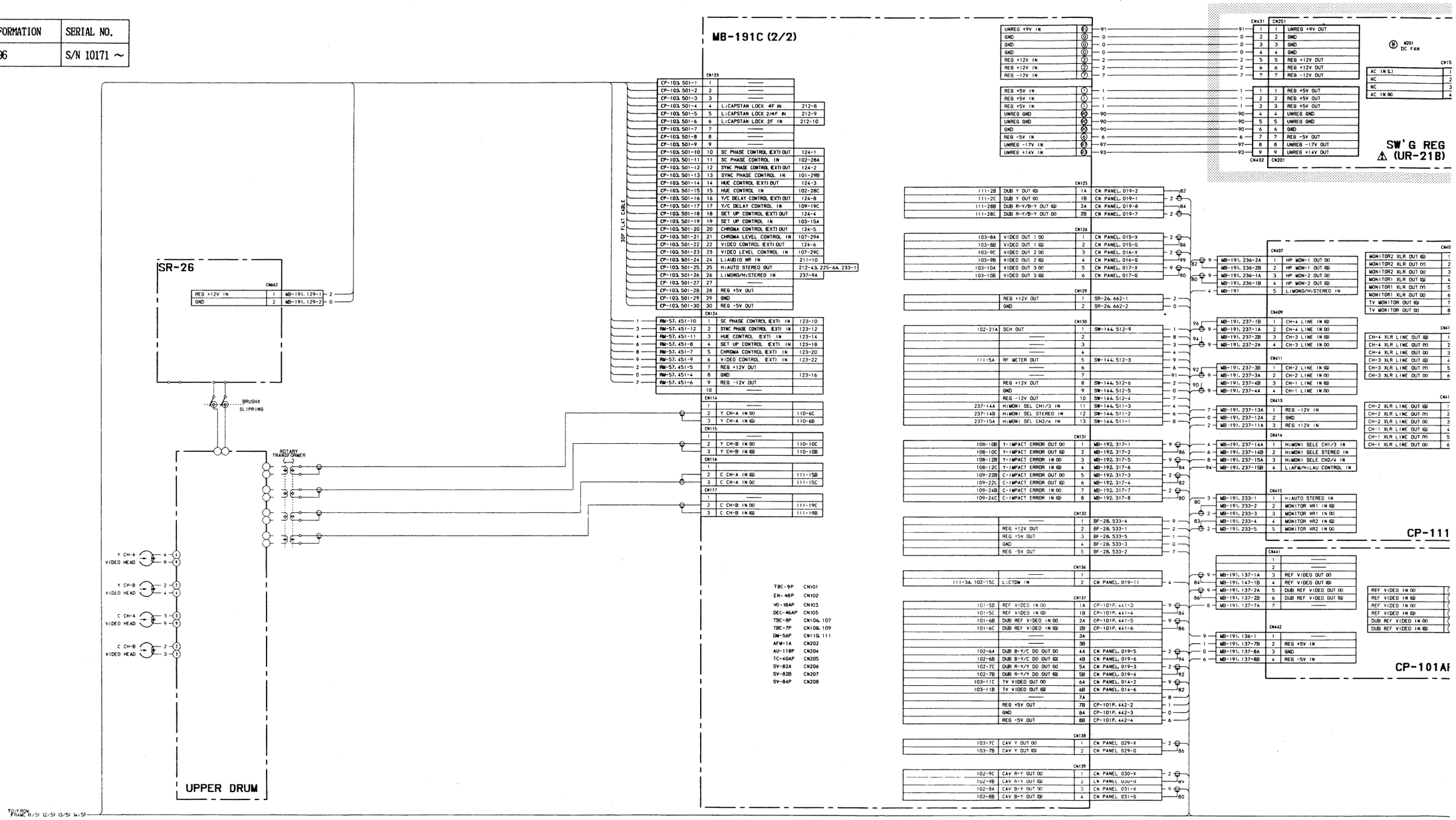


NOTE:

The s
safety
Repla

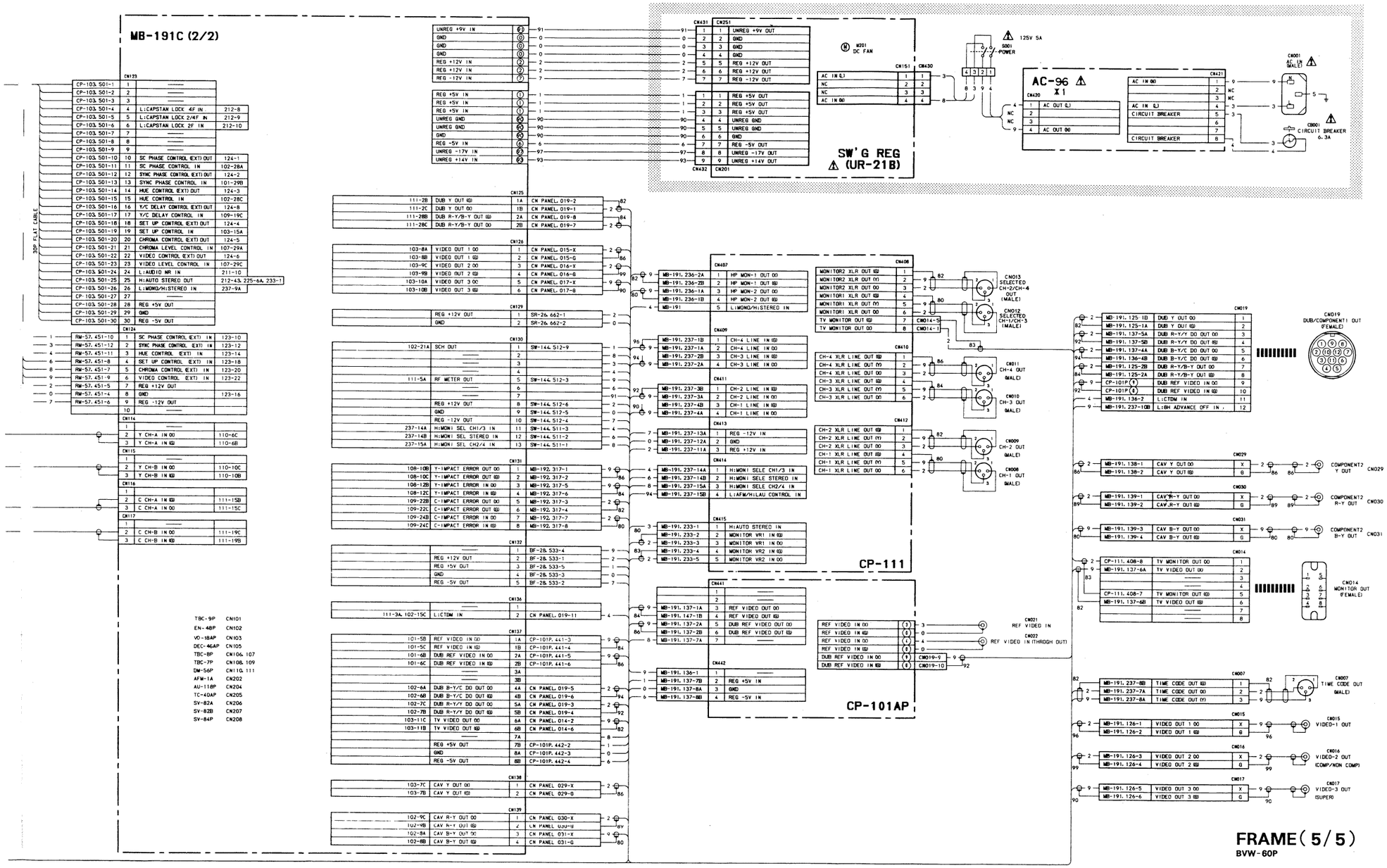


**FRAME(5/5)**
BVW-60P

**NOTE:**

**The shaded and ⚠-marked components are critical to safety.**
**Replace only with same components as specified.**